This is a digital copy of a book that was preserved for generations on library shelves before it was carefully scanned by Google as part of a project to make the world's books discoverable online.

It has survived long enough for the copyright to expire and the book to enter the public domain. A public domain book is one that was never subject to copyright or whose legal copyright term has expired. Whether a book is in the public domain may vary country to country. Public domain books are our gateways to the past, representing a wealth of history, culture and knowledge that's often difficult to discover.

Marks, notations and other marginalia present in the original volume will appear in this file - a reminder of this book's long journey from the publisher to a library and finally to you.

Usage guidelines

Google is proud to partner with libraries to digitize public domain materials and make them widely accessible. Public domain books belong to the public and we are merely their custodians. Nevertheless, this work is expensive, so in order to keep providing this resource, we have taken steps to prevent abuse by commercial parties, including placing technical restrictions on automated querying.

We also ask that you:

+ *Make non-commercial use of the files* We designed Google Book Search for use by individuals, and we request that you use these files for personal, non-commercial purposes.
+ *Refrain from automated querying* Do not send automated queries of any sort to Google's system: If you are conducting research on machine translation, optical character recognition or other areas where access to a large amount of text is helpful, please contact us. We encourage the use of public domain materials for these purposes and may be able to help.
+ *Maintain attribution* The Google "watermark" you see on each file is essential for informing people about this project and helping them find additional materials through Google Book Search. Please do not remove it.
+ *Keep it legal* Whatever your use, remember that you are responsible for ensuring that what you are doing is legal. Do not assume that just because we believe a book is in the public domain for users in the United States, that the work is also in the public domain for users in other countries. Whether a book is still in copyright varies from country to country, and we can't offer guidance on whether any specific use of any specific book is allowed. Please do not assume that a book's appearance in Google Book Search means it can be used in any manner anywhere in the world. Copyright infringement liability can be quite severe.

About Google Book Search

Google's mission is to organize the world's information and to make it universally accessible and useful. Google Book Search helps readers discover the world's books while helping authors and publishers reach new audiences. You can search through the full text of this book on the web at `http://books.google.com/`

THE GIFT OF
U.S. Supt Pub. Doc.

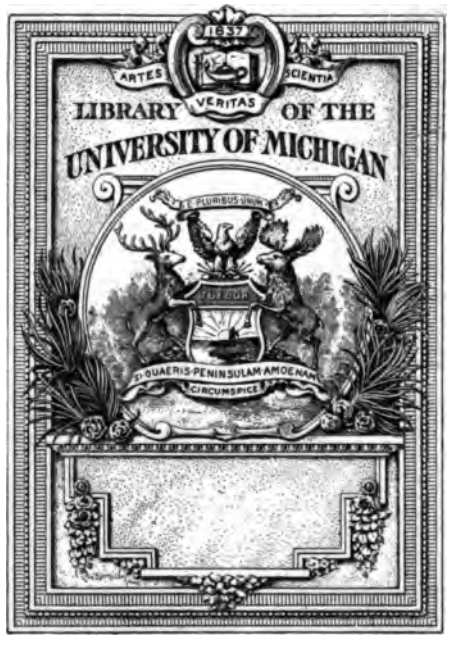

THE GIFT OF
U.S. Supt Pub. Doc.

60 Cong 1 Sess H Doc v. 44 5313

Issued April 25, 1908.

ANNUAL REPORTS

OF THE

DEPARTMENT OF AGRICULTURE

FOR THE YEAR ENDED JUNE 30,

1907.

REPORT OF THE

SECRETARY OF AGRICULTURE.

DEPARTMENTAL REPORTS.

WASHINGTON:
GOVERNMENT PRINTING OFFICE.
1908.

[CHAPTER 23, Stat. at L., 1895.]

[AN ACT Providing for the public printing and binding and the distribution of public documents.]

* * * * * * *

Section 73, paragraph 2:

The Annual Report of the Secretary of Agriculture shall hereafter be submitted and printed in two parts, as follows: Part One, which shall contain purely business and executive matter which it is necessary for the Secretary to submit to the President and Congress; Part Two, which shall contain such reports from the different Bureaus and Divisions, and such papers prepared by their special agents, accompanied by suitable illustrations, as shall, in the opinion of the Secretary, be specially suited to interest and instruct the farmers of the country, and to include a general report of the operations of the Department for their information. There shall be printed of Part One, one thousand copies for the Senate, two thousand copies for the House, and three thousand copies for the Department of Agriculture; and of Part Two, one hundred and ten thousand copies for the use of the Senate, three hundred and sixty thousand copies for the use of the House of Representatives, and thirty thousand copies for the use of the Department of Agriculture, the illustrations for the same to be executed under the supervision of the Public Printer, in accordance with directions of the Joint Committee on Printing, said illustrations to be subject to the approval of the Secretary of Agriculture; and the title of each of the said parts shall be such as to show that such part is complete in itself.

CONTENTS.

REPORT OF THE SECRETARY OF AGRICULTURE.

	Page.
Review of production	9
Average crops and highest income	9
Durum wheat	10
Beet sugar	11
Alfalfa	12
Irrigation	13
Summary of crop introductions and extensions	13
Value of the Department's work	13
Chief crops	14
Total of cereals	18
Summary of crops	19
Total wealth production	19
Foreign trade	21
The farmer's thanksgiving	23
Weather Bureau	23
Weather forecasts	24
Destruction of the administration building	24
The forecast service	24
Seismic disturbances	25
The Salton Sea	25
Rainfall and evaporation	25
Foreign meteorologists study American weather service	26
Bureau of Animal Industry	27
The meat inspection	27
Inspection of export animals	29
Eradication of the cattle tick	29
Control of contagious diseases	30
Inspection and quarantine of imported animals	31
Tuberculosis investigations	31
Hog cholera investigations	32
Other pathological work	33
Work on animal parasites and parasitic diseases	34
Sheep dips	34
Distribution of blackleg vaccine, tuberculin, and mallein	34
Animal husbandry work	35
Animal nutrition	36
Classification for American carriage horses	37
Work relating to the dairy industry	37

205212

	Page.
Bureau of Plant Industry	40
The work of the pathologists	40
New crops and new industries	43
Life history studies of plants	44
Progress with forage crops	47
Improving the corn, cotton, tobacco, and other crops	49
Work in the improvement and extension of grain crops	53
Soil bacteriology	54
Studies of water contamination	55
Fruit investigations	55
Sugar-beet investigations	56
Studies of poisonous plants	57
The growing of drug crops as a new industry	57
Progress in seed studies	57
Congressional seed distribution	58
Experimental gardens and grounds and Arlington Farm	58
Helping the farmers in the boll-weevil region	58
Grain standardization	59
Farm management	60
Forest Service	61
Returns from the National Forests	61
National Forests not experiments	63
The gain in the use of the forests	63
Some immediate problems	64
Need of a census of standing timber	65
Work of the year	66
Bureau of Chemistry	71
Inception of the work for the enforcement of the food and drugs act	71
Food research work	73
Miscellaneous investigations	74
Contracts work	74
Bureau of Soils	74
The problem of soil fertility	75
Tobacco soils	77
Practical uses of soil maps and reports	78
Soil erosion	83
Bureau of Entomology	87
The Mexican cotton boll weevil	87
Work on the gipsy moth and the brown-tail moth	89
Introduction of beneficial insects	90
The sending of useful insects abroad	91
Field crop insects	92
White fly investigations	93
Insects affecting tobacco	94
Insects damaging deciduous fruit trees	94
Bee culture	94
Silk culture	95
Insects injurious to vegetable crops	95
Insects injurious to forests	95
Insects which carry disease to man and domestic animals	96
Other investigations	96

Page.
Bureau of Biological Survey 96
Economic value of birds 96
Economic investigations 96
Game protection and introduction 101
Division of Accounts and Disbursements 103
Division of Publications 105
Farmers' Bulletins 106
Publications specifically authorized by law 106
Weighing the mail 106
To facilitate the reprinting of our publications by the agricultural experiment stations 107
Bureau of Statistics 108
Growth and development of crop statistics 108
Methods of crop reporting 109
Scope of crop reports 110
Transmission of reports to Bureau by correspondents 110
Preparation of reports 111
Method of issuing reports 112
State statistical agents 113
Special field agents 113
International trade and production statistics 114
Meat supply and surplus 114
Comment on crop reports 115
The Library 115
Office of Experiment Stations 116
Relations with agricultural experiment stations 116
The agricultural colleges and schools 118
Farmers' institutes 120
Insular stations 121
Nutrition investigations 123
Irrigation and drainage investigations 126
Office of Public Roads 132
Road mileage, revenues, and expenditures 133
Methods of road construction and maintenance 133
Lectures 135
Instruction in highway engineering 135
Investigation of the properties of road materials 135
Special investigations 136
Cooperation with Departments and Bureaus 136
Investigation of road materials in the several States 137
Model county systems 137
Investigation of dust preventives and road preservatives 138
The Department's working force 138
Office of the Solicitor 139
New building for the Department 140

DEPARTMENTAL REPORTS.

Report of the Chief of the Weather Bureau 143
Report of the Chief of the Bureau of Animal Industry 191
Report of the Chief of the Bureau of Plant Industry 257

	Page.
Report of the Forester	343
Report of the Chemist	381
Report of the Chief of the Bureau of Soils	411
Report of the Entomologist	443
Report of the Chief of the Bureau of Biological Survey	485
Report of the Chief of the Division of Accounts and Disbursements	507
Report of the Editor	541
Report of the Acting Chief of the Bureau of Statistics	629
Report of the Librarian	645
Report of the Director of the Office of Experiment Stations	649
Report of the Director of the Office of Public Roads	717
Report of the Appointment Clerk	741
Report of the Solicitor	759
Report on new building operations	777

REPORT OF THE SECRETARY OF AGRICULTURE.

REPORT

OF THE

SECRETARY OF AGRICULTURE.

Mr. President:

I respectfully present my Eleventh Annual Report of the work of the Department of Agriculture for the past year.

It has been a year of untoward conditions requiring all the industry and skill of the farmers to grow an average crop. They have struggled not only with an erratic season but with a scarcity of help in all the States and Territories of the Union.

REVIEW OF PRODUCTION.

AVERAGE CROPS AND HIGHEST INCOME.

Such a year as 1907 has been, with its hard winter, summer weather in March, and late cold spring, gives exceptional emphasis to the wisdom of this Department's policy of diversifying farm products and of establishing new crops. A general crop failure in a field as large as the chief part of the Temperate Zone of a continent must be a rare occurrence.

No general crop failure afflicts the farmer this year, not even within small areas. The production of the farms, all things considered, is well up to the average of the previous five years in quantity, while its value to the farmer, as now appears at this annual day of reckoning, reaches a figure much above that of 1906, which by far exceeded any previous year's wealth production on farms.

Out of the farming operations of 1907, the railroads will get an average haul of freight, and foreign countries will take a heavy excess above home consumption. The farmer will have more to spend and more to invest than he ever before had out of his year's work.

DURUM WHEAT.

ITS INTRODUCTION.

When the Department of Agriculture brought durum wheat to this country from Russia and Africa during 1899 to 1902 the seed was sown that formed practically the entire foundation of the present crop of durum wheat. At a cost of $10,000 in the beginning, a crop worth $30,000,000 now grows in regions of low rainfall, where in the day of stock ranges the steer roamed on 20 acres to find his living. This crop has encroached on the home of the prairie dog and of the cactus. It has spread throughout a wide strip of country, extending from northern North Dakota to southeastern New Mexico and northwestern Texas. It is a common crop in Montana and Idaho and in parts of Washington, Oregon, and Utah.

INDUSTRIAL USES.

This variety of wheat has entered into home industries. To a considerable extent it is mixed with other wheat in making flour for bread. It is promoting the manufacture of macaroni and kindred paste products in this country and is prepared as a breakfast food. It is the grain through which the desert feeds the cities of the east at home and abroad.

LARGE EXPORTS.

As an export crop durum wheat has become prominent. In 1905 Europe took nearly 10,000,000 of the 20,000,000 bushels produced; in 1906 about 20,000,000 bushels of the crop of that year.

Last year two-thirds of the exports went to Mediterranean countries. The former sheep and cattle ranges sent macaroni material to Marseille, Naples, and Venice; to Greece, Spain, and the countries of western Europe; and even to the old homes of durum wheat—northern Africa and Russia. Shipments of this wheat were made to 43 ports in Europe and Africa named in trade reports of the collectors of customs, and to other ports unnamed.

VALUE IS OVER TWICE THE COST OF THE DEPARTMENT.

With an average production of about 15 bushels per acre, durum wheat this year covered an area of over 3,000,000 acres, many of them valueless for agricultural purposes before the advent of this new crop. Its value to the farmer is over twice the entire cost of the Department of Agriculture during the current fiscal year, including the Weather Bureau, the costly meat inspection, and the Forest Service.

BEET SUGAR.

RAPID INCREASE.

The beet-sugar industry in this country had not advanced beyond experiment nor given promise of prominence until about 1888. Since that year it has rapidly grown, under aid and encouragement from the Department of Agriculture and the experiment stations and with favorable legislation by Congress and several State legislatures.

About 560 short tons of beet sugar were made yearly from 1879 to 1887; in 1891 the quantity was 6,000 short tons; in 1892, 13,460 short tons; in 1893, 22,344 short tons; in 1897, 45,246 short tons; in 1899, 81,729 short tons; in 1901, 184,606 short tons; in 1903, 240,604 short tons; in 1906, 483,000 short tons; and in 1907, 500,000 short tons.

ECONOMIC VALUE.

As an acquisition to agriculture much may be said in favor of growing sugar beets for the factory. Tillage must be of the best and the soil fertile. The pulp of the beets, after the extraction of the sugar, is relished by live stock. The crop is grown under factory-contract conditions, and the farmer knows upon what he may depend for profit.

FACTORIES AND LAND VALUES.

Sugar factories occupy a belt across the continent in the sugar-beet zone and a belt from Washington to Arizona along the Pacific coast. From the easternmost factory in western New York they extend through Ohio, Michigan, Illinois, Wisconsin, Minnesota, Kansas, Nebraska, Montana, Colorado, Utah, and Idaho; and from eastern Washington through Oregon and California to southern California and Arizona.

In 16 States there were 64 factories in 1906, with a capacity of working 49,500 tons of beets daily. Factories with more than three-fifths of this capacity are situated in the Western Division of States, and in that region this new crop has so well established itself and the growing of sugar beets has proved to be so remunerative that sugar-beet farms of the medium sort increased in value $42.49 per acre from 1900 to 1905, as determined by special investigation by the Department of Agriculture, or from $99.47 per acre in 1900 to $141.96 in 1905.

VALUE OF PRODUCT AND CAPITAL.

To the fostering of this industry by Nation and States, to the instruction provided by the Department of Agriculture, by experiment stations, and by agricultural colleges, it has responded by

increasing the value of its production 543 per cent in nine years. The factory value of the refined sugar made in 1899 was $7,000,000, and in 1907, $45,000,000. More than $60,000,000 is now the value of the beet-sugar farms and factories.

One-third of the value of the beet sugar made this year would be enough to pay the cost of the Department of Agriculture during the current fiscal year and the National expense of the sixty experiment stations of contiguous United States when they shall have received the ultimate appropriation of the Adams Act.

ALFALFA.

IMPORTANCE AND VALUE.

Alfalfa, that extraordinary plant for producing wealth and doing wonders to farms, is occupying an important place in the plans of the Department of Agriculture, the experiment stations, and the agricultural colleges. Through their efforts largely it has rapidly gained success in cultivation throughout a vast area. The value of the crop as hay this year is supposed to be $100,000,000, and if the plans and efforts now under way to promote its extension receive a reasonable reward the value of the future crop will be several times the present amount.

MERITS OF THE PLANT.

This forage plant is a chemical laboratory in which nitrogen is taken from the air. It is a soil improver of the highest merit. As a flesh-forming feed for growing live stock, and as a milk and egg producer, it is unexcelled by any plant of large production.

It grows 2½ tons of hay to the acre as an average for the whole country where it is grown, or twice the average for all kinds of hay, and, besides this, is more nutritious than other hays.

EXTENSION.

The cultivation of alfalfa has been pressing eastward until now it has established itself as far as the longitude of eastern Kansas, except in southern Texas. It is established in some areas still farther to the eastward—in spots in Arkansas, in southern Wisconsin, northern Illinois, and northern Indiana, in the limestone regions of Kentucky and Tennessee, and in the southeastern corner of Michigan.

This plant is semi-established in Minnesota, Iowa, Missouri, and Ohio, and is making its way in Illinois and Indiana. Elsewhere the growing of this plant is mostly experimental, but with promise of success.

PRIZE WORTH HUNDREDS OF MILLIONS.

Further extension of alfalfa growing on large areas, by means of instruction by the Department of Agriculture, the experiment sta-

tions, and the agricultural colleges, is a prize that will be worth hundreds of millions of dollars yearly; and it will be won. What has already been secured aided in the rescue of the farm production of this year from the disasters of the weather.

IRRIGATION.

UNFAILING RELIANCE.

Among the large efforts that have the effect of giving steadiness to the agricultural production of the Nation at times of threatened adversity is irrigation. This is almost entirely confined to the arid and semiarid regions west of the one hundredth meridian and to the rice coast of the Gulf of Mexico in Texas and Louisiana, but will move eastward as its value is learned.

AREA.

The area now under irrigation is 11,000,000 acres, or a surface equal to the improved farm land of Georgia, or Virginia, or Michigan, or equal to one-third of the cotton area.

VALUE OF CROPS.

At the census average income per acre, with allowance for subsequent increase of price of products, the value of the crops raised on irrigated land this year would appear to be worth at least $175,000,000, an increase of 75 per cent over the value of 1899.

In 1908 an additional area of 5,000,000 acres will be under ditch and ready for settlement. When this additional area is settled, the total will be 16,000,000 acres. If the new area were at once productive, the irrigated crops of 1908, at the price of 1907, would be worth $250,000,000, or more, and would support a population of over 1,000,000 persons.

SUMMARY OF CROP INTRODUCTIONS AND EXTENSIONS.

The foregoing striking features of the results of crop introduction and extension within the last few years are some of the illustrations of the wisdom of the great movement of the Department of Agriculture, of the experiment stations, and of the agricultural colleges, to fortify and buttress the agriculture of the Nation against misfortune, and to give to it a sort of insurance by multiplying the sources of success. This policy has done much to keep the production of 1907 not only from disaster, but, all things considered, actually to keep it up to an average of recent years.

VALUE OF THE DEPARTMENT'S WORK.

CONCERNED WITH WEALTH PRODUCTION AND PRESERVATION.

It is difficult to express in dollars the value of the work of the Department of Agriculture to farmers, and therefore to the Nation,

but an attempt to do so was made last winter for the Committee of the House of Representatives on Expenditures in the Department of Agriculture, which made a total of $232,000,000.

Fundamentally the work of the Department is concerned with the production of wealth, as by increasing a crop yield per acre by plant breeding; and the preservation of wealth, as by suppressing insect and fungous pests; and with enabling farmers to make a fair sale of their products, as by promoting cooperative selling or by giving to the public information of the size of a crop in order that demand may be fairly adjusted to supply.

CHIEF CROPS.

CORN.

Four-fifths of the world's production of corn, as nearly as can be determined, grows in the United States, and in the world's international trade in corn this country contributes one-third to one-half of the exports, not including the products of corn-fed animals.

FACTOR IN NATIONAL PROSPERITY.—Corn is the chief of crops and exceeds every other prominent agricultural factor of national prosperity. It is a human food, and more especially a live-stock feed, with striking results. It is one of the great motive powers in the food of an energetic age. The starch of corn becomes the fat of the hog and the "finish" of the steer. No meat products are so much in demand in international trade as animal fats and oils. The value of these is more than one-half of the value of all exports of meat animals and packing-house products from this country. It is from four fifths to nine-tenths of the value of these exports to Germany, to Italy, and to Norway and Sweden; and from two-thirds to four-fifths of these exports to France, and nine-tenths of these exports to Austria-Hungary, Denmark, and the Netherlands.

Fears of a failure or a large degree of failure of the corn crop this year diminished after midsummer and at last the harvest secured 2,553,732,000 bushels, a production that is almost exactly the average of the crops of the preceding five years. There have been three larger corn crops—those of 1899, 1905, and 1906.

ITS FABULOUS VALUE.—In value the corn crop of this year is much above the high-water mark of 1906. On the assumption that the crop will be sold by farmers at an average price not below the present one, its value is estimated to be $1,350,000,000, or 26 per cent above the average value of the previous five crops. Four crops before had exceeded one billion dollars in value.

The farm value of the corn crop of eight such years as 1907 would pay for duplicating every mile of steam railroads in the United

States and pay for their costly terminals, rolling stock, and all property. In thirteen years it would replace the present banking power of this country in banking capital, surplus, deposits, and circulation, and in seventeen years it would replace the banking power of the world.

HAY.

Apparently the hay crop this year is more valuable than the cotton crop. On account of the varieties and qualities of hay its average price is difficult to determine without reports from crop correspondents. The computed value of the 61,420,000 tons of the crop is $660,000,000. The tonnage has been exceeded several times, but the value is $65,000,000 above the highest previous value, that of 1906. Compared with the average of the preceding five years, the quantity of the hay crop of this year is 2½ per cent higher and the value is 20 per cent higher.

COTTON.

If the cotton crop of this year does not eventually occupy second place in value instead of hay in the final estimates of the Department, if seed be included, it certainly has third place, even without seed.

The farm value of the 1907 crop of cotton and its seed is estimated to be from $650,000,000 to $675,000,000. The commercial expectations are that the crop will be found to be the third one in size ever raised, and perceptibly larger than the average crop of the previous five years. Its farm value is probably a little below that of last year's crop. Otherwise it will be the most valuable cotton crop ever raised in this country and 7 per cent above the average farm value of the crops of the previous five years.

SUFFICIENT FOR THE WORLD'S NEEDS.—The year was a trying one to cotton from planting time to nearly the end of the summer, but even under adverse conditions a crop has been produced that will be sufficient, with the surplus of last year, to meet the requirements of spinners until the next harvest.

The fears of a cotton famine that followed the low production of this country in 1901 have not been justified, and in the meantime efforts to make European spinners partly independent of the Upland cotton of the South by aiding the growing of "colonial" cotton have not made themselves felt.

Outside of the British East Indies, the production of cotton in the British colonies, possessions, and protectorates was 7,553 bales of 500 pounds gross weight in 1904 and 10,016 bales in 1905. In the French colonies, except French India and Indo-China, 400 bales were produced in 1904; in the German colonies, 1,500 bales in 1905.

LOW COST OF TRANSPORTATION.—Among the strong points of advantage possessed by this country's cotton is the low cost of transportation to market. Recent investigations by this Department indicate that the average cost of transporting cotton per 100 pounds from farm to local shipping point is about 16 cents; from local shipping point to seaport, about 40 cents; and from seaport to the United Kingdom, about 32 cents; the total being only 88 cents per 100 pounds, or less than a cent a pound.

WHEAT.

Wheat, the fourth crop of the year in value, is deficient in quantity by 5 per cent when compared with the average crop of the preceding five years. The 625,576,000 bushels produced will be enough for a large per capita consumption, with a remnant of many millions of bushels for export, although not as many as usual. During the last five years the wheat exports, including flour, have averaged 122,411,110 bushels, and during that period 18.6 per cent of the crops was exported.

Although wheat is 5 per cent in quantity below the average crop of five years preceding, it is 5½ per cent above the average value of these crops, or a little over $500,000,000. The crops of three years, 1901, 1902, and 1905, had a slightly higher value than this one.

OATS.

The only large crop to which a great degree of failure attaches this year is oats. Only 741,521,000 bushels were harvested and these were of low quality. In number of bushels this is the tenth oats crop ever grown in this country, and it is 19 per cent below the average crop of the previous five years.

In value the story is different. Contrasted with the loss of 19 per cent in quantity is a gain of 26 per cent in value in comparison with the five-year average; so that this year's crop is worth $360,000,000, or much more than the most valuable oats crop heretofore produced.

POTATOES.

The sixth crop in value is potatoes—292,427,000 bushels, worth $190,000,000. Three potato crops have exceeded this one in size—those of 1895, 1904, and 1906—but it is 2 per cent above the average of the previous five years. Its value is 26 per cent above the five-year average.

BARLEY.

Barley has pushed its way upward in production until it is now the seventh crop in value. The 147,192,000 bushels of this year are estimated to be worth $115,000,000. Only the crop of 1906 was larger, and the crop of 1907 is 2 per cent above the average of the

previous five years. The value of barley this year indicates an extraordinary situation, the price per bushel being about double what it was last year; hence the value of the crop is about 85 per cent above the average of the previous five years.

TOBACCO.

The tobacco crop has declined to 645,213,000 pounds this year and is smaller than the crops of many years. It is 11 per cent under the average of the preceding five years, yet the value is the highest ever reached, except in 1906, and is estimated to be $67,000,000, or 16 per cent above the five-year average.

SUGAR, MOLASSES, AND SIRUP.

As farm crops, sugar beets and sugar cane are valued herein as such, except that the cane products are taken into account if the cane is crushed on the farm. The large cane-sugar mill is classed with manufacturing instead of with agriculture; this is to preserve the census basis for comparison.

The farm value of the sugar beets in 1907 and of the sugar cane and sorghum cane and such molasses and sirup as were made on the farm is estimated to be $64,000,000. The sugar-beets value is slightly above the figure for 1906, and is 50 per cent above that for 1905, and twice the amount for either 1903 or 1904. The farm value of sugar cane, molasses, and sirup is estimated to be $33,500,000, which was exceeded only in 1904.

As a manufacturing industry.—The popular interest in this subject is so large that it is worth mentioning as a manufacturing industry. The raw cane-sugar mill production of 1907 is estimated at 389,000 short tons, with a factory value of $28,000,000, the year 1904 alone exceeding this amount. The estimate for refined beet sugar is 500,000 short tons, worth $45,000,000.

Both kinds of sugar add to 889,000 short tons, worth $73,000,000. When mill molasses and sirup and sorghum and maple products and beet pulp are added, the total value of the ultimate products of the sugar, molasses, and sirup industry (the refining of cane sugar not included) in 1907 is $95,000,000.

FLAXSEED.

The 25,420,000 bushels of flaxseed of this year's crop are worth about $26,000,000, the quantity being 5 per cent under and the value 3 per cent over the average of the previous five years. The crop of 1902 is the only one that exceeded this one in value.

RYE.

With a production of 31,566,000 bushels, or 4 per cent above the average of the five previous years, the rye crop has a value of

$23,000,000, or 29 per cent above the five-year average. In three years, going back to 1891, the production has been greater, and the value has been higher in two years, 1867 and 1901.

RICE.

Rice is the twelfth crop in point of value this year and in both quantity and value is the record rice crop. The preliminary estimate is a production of 21,412,000 bushels of rough rice, or 963,540,000 pounds, an amount a little above the great crop of 1904 and 98 per cent above the average crop of the previous three years. This year's crop is worth $19,500,000 to the farmers, or 36 per cent above the three-year average.

The exports of domestic rice in the fiscal year following the crop year 1904 were 75,000,000 pounds of cleaned rice, 4,000,000 pounds in 1906, and 2,443,000 pounds in 1907. The imports of rice, less the foreign and domestic exports, were about 64,000,000 pounds yearly from 1900 to 1903, and about 62,000,000 pounds in 1904. After the crop of 1904 the tide turned and in 1905 there were net exports amounting to 41,000,000 pounds, followed the next year by net imports of 43,000,000 pounds, and in 1907 of 61,000,000 pounds. The only year before 1907 when the production was greater than the consumption was 1904, and the production in 1907 is greater than in that year. The Department of Agriculture has been helping the rice grower to get better varieties from the Orient, which will change imports into exports.

BUCKWHEAT.

Buckwheat was a crop of larger production before 1860 than it has been in subsequent years, but it has revived during the last half dozen years. The production in 1907 is 13,911,000 bushels, or 4.7 per cent below the average of the previous five years, and its value is $10,000,000, or 14 per cent above the five-year average.

HOPS.

The hop crop has lapsed somewhat from its position in 1905 and 1906. The production of 1907 is estimated at 48,330,000 pounds, or 4.6 per cent below the five-year average, while the value of the 1907 crop is placed at a little less than $5,000,000, or 29 per cent below the five-year average.

TOTAL OF CEREALS.

Upon consolidating the seven cereal crops and comparing the production of 1907 with the average of the preceding five years, a loss of 214,000,000 bushels is observed, or 5 per cent. That is, the average of the five years was 4,349,000,000 bushels, and the production in 1907 was 4,135,000,000 bushels. The oats crop was 175,000,000 bushels under

the average, and wheat 32,000,000 bushels, while rice was 11,000,000 bushels above, and rye and barley a little above.

Regarding corn as at the average of production and excepting oats, the other cereals show a net reduction below the five-year average of only 18,000,000 bushels, and this in a total production, omitting oats, of 3,393,000,000 bushels, so that the percentage of the net reduction is only one-half of 1 per cent.

In total value the seven cereal crops make a new high record that is above that of 1906 by $296,000,000. The farm value of the cereals of this year is estimated to be $2,378,000,000, or 23 per cent above the average of the previous five years.

SUMMARY OF CROPS.

In the production of crops the year 1907 has been a good one to all of the people as well as to the farmers. It has averaged with the previous five years after a general balancing of gains and losses. A great fall in oats below the average and much smaller declines in wheat, tobacco, hops, flaxseed, and buckwheat have been counterbalanced, and more than that, by increases above the average in cotton, hay, barley, rye, rice, and potatoes. This means material commodities and not the value placed upon them.

No such high aggregate of crop values has ever before been reached by farmers as for the crops of 1907. In estimating these, little if any use is made of the high prices before the break in the latter part of October. The present indication is that every crop except hops will considerably, if not very much, exceed in value the average of the previous five years. Extremely large rates of gain are observed for corn, oats, barley, rye, hay, tobacco, potatoes, rice, and cotton seed, and the rates of gain would be notable in any ordinary year in the case of wheat, cotton lint, and buckwheat.

In the grand total income from his crops of this year the farmer finds himself in better financial condition than before. He reckons his income in ten figures and he is still improving his farm, buying bonds, lending to his neighbors, and putting his money into the vaults of banks.

TOTAL WEALTH PRODUCTION.

HIGHEST RECORD.

Wealth production on farms in 1907, as expressed in value, transcended the high record of 1906, which was itself much above the highest amount before reached. In arriving at the total the farm products of the year are estimated in value for every detail presented by the census and at that point in production at which they acquire commercial value.

The grand total for 1907 is $7,412,000,000. This is $657,000,000 above the value of 1906, $1,103,000,000 above that of 1905, $1,253,000,000 above that of 1904, $1,495,000,000 above that of 1903, and $2,695,000,000 above the census amount for 1899.

The value of the farm products of 1907 was 10 per cent greater than that of 1906, 17 per cent over 1905, 20 per cent over 1904, 25 per cent over 1903, and 57 per cent over 1899.

A simple series of index numbers shows the progressive movement of wealth production by the farmer. The value of the products in 1899 being taken at 100, the value for 1903 stands at 125, for 1904 at 131, for 1905 at 134, for 1906 at 143, and for 1907 at 157.

During the last nine years wealth estimated as above explained was created on farms to the fabulous amount of $53,000,000,000.

SEVERAL GROUPS OF PRODUCTS.

Besides the crops, there were farm dairy products in 1907 which nearly reached $800,000,000. The price of butter increased 4¾ cents a pound over 1906 and of milk three-fourths of a cent a gallon.

More than $600,000,000 must be regarded as the value of the poultry and eggs produced on farms in 1907. The amount may easily have been larger. This industry has advanced at such a rapid rate that no arithmetic can keep up with it. The farm price of eggs in 1899 was 11.15 cents per dozen as an average for the United States; in 1903, 12.37 cents; in 1904, 17.2 cents; in 1905, 18.7 cents; in 1906, 17 cents, and in 1907, 18.2 cents.

Dressed poultry in New York sold for 10.78 cents per pound wholesale in 1899, for 12.97 cents in 1903, for 12.57 cents in 1904, for 13.36 cents in 1905, for 13.2 cents in 1906, and for 14.9 cents in 1907.

The animals sold from farms and slaughtered on them in 1907 were worth about $1,270,000,000.

DAIRY, POULTRY, AND LIVE-STOCK COMPARISONS.

Dairy products are much more valuable than any crop except corn, and are equal to one-third of the value of all cereals.

The poultry products are worth more than the wheat and perhaps as much as the hay.

The live stock sold from farms and slaughtered on them is worth nearly twice as much as the cotton crop.

It is only by comparison that a glimmer of understanding can be given to such numbers as the foregoing. Enough is apparent, however, to make it plain that the farmer of the United States is in a business that counts for National welfare by providing the wherewithal on a scale of magnificence that defies the imagination to comprehend.

FOREIGN TRADE.

EXPORTS.

Food and fiber were provided in such enormous quantities in 1906 that a great National surplus went abroad to feed and clothe many millions in foreign countries. High prices helped to swell these exports as expressed in money, and for the first time in the history of the world a country exported agricultural commodities of home production to a value greater than $1,000,000,000.

In the year ending June 30, 1907, the domestic exports of farm products were valued at $1,055,000,000, or $79,000,000 above the high record of the previous year. Four-fifths of these were plant products, and chief among these was cotton, with a port value of $482,000,000, an amount much above the highest value of any former year.

The exported grain and grain products were valued at $184,000,000, the unmanufactured tobacco at $33,000,000, the oil cake and oil-cake meal at $26,000,000, the vegetable oils at $20,000,000, and the fruits at $17,000,000. All were gains over 1906, except the item of grain and grain products.

Animals and animal products were exported to the value of $255,000,000, mostly composed of packing-house products, worth $203,000,000, or only $4,000,000 under the high-water mark of 1906. Exported live animals were valued at $41,000,000 and dairy products at $6,600,000.

EXPORT MOVEMENT MOSTLY SUSTAINED BY THE FARM.—The farm sustains most of the great export movement. If to the products that are fully agricultural are added those that are considerably so in combination with materials of other origin, and then are added the forest products and the commodities considerably composed of them, the remnant of the exports is but 28½ per cent of the total value of the record for 1907.

Cotton and its products are 29½ per cent of the total value of all exports; animals and animal products, 17 per cent; grain and grain products, 10½ per cent; all other exports sustained by agriculture, 6½ per cent; and the exports sustained by the forests are 8 per cent. Farm and forest together sustained 71½ per cent of the exports of 1907.

IMPORTS.

Agricultural products valued at $627,000,000 were imported in the fiscal year 1907, of which the plant products were $403,000,000, chief among these being sugar and molasses, valued at $94,000,000; coffee, $78,000,000; vegetable fibers, $62,000,000; fruits and tobacco, each valued at $26,000,000, and vegetable oils, with a value of $15,000,000.

Animals and their products were imported to the value of $224,000,000, with packing-house products, mostly hides and skins, valued at $96,000,000; silk valued at $71,000,000, wool at $42,000,000, and dairy products at $6,000,000.

FOREST PRODUCTS.

Never before 1907 were the year's exports of forest products so valuable as in this year. With an increase of $16,000,000 over 1906, the total of these exports ran up to $93,000,000, of which $52,000,000 was the value of lumber, $22,000,000 naval stores, and $18,000,000 timber.

On the other hand, the imported forest products were valued at $123,000,000, mostly composed of india rubber, valued at $59,000,000; lumber, valued at $21,000,000; gums, not including rubber, valued at $15,000,000; wood pulp at $6,000,000; and unsawed cabinet woods at $5,000,000. The total imports of forest products were valued at $26,000,000 above the total of 1906, which was the highest amount hitherto reached.

BALANCE OF TRADE.

The farmer is concerned in the Nation's balance of international trade, inasmuch as he provides the great bulk of the foreign credit which other classes of persons draw upon in the contrary movement of credit against this country.

The balance of trade in farm products in favor of this country in 1907 was $444,000,000, an amount that has been exceeded in only four years—1898, 1899, 1901, and 1902. In all other products the trade of 1907 produced a balance of only $2,500,000 in favor of this country.

MOST OF THE FOREIGN CREDIT PROVIDED BY FARMERS.—In eighteen years beginning with 1890 the farmers have not failed to secure a balance of at least $193,000,000, the low amount of 1895. The great aggregate of the 18 balances in the trade in farm products is $6,500,000,000, while the trade in other commodities during the eighteen years resulted in a grand adverse balance of $456,000,000.

A great stream of wealth has constantly been sent from farms to foreign countries to offset the adverse balance of trade in commodities other than agricultural; to pay the ocean freight costs on imports conveyed in foreign-owned ships; and to pay the interest, dividends, and principal on investments in the United States by foreigners. It is the farmer who has sent credit to expatriated Americans; it is he who has provided the immigrant with millions to send every year to the loved ones in the old countries; and, if there is still any credit to dispose of, the farmer has provided the American traveler in foreign countries with his pocket money.

THE FARMER'S THANKSGIVING.

The farmer has received much for which to be thankful. During the first half of the year he was threatened with general crop failure throughout the length and breadth of the country east of the Rocky Mountains. The very last day was exhausted that could be withheld from crop growth and still leave an average harvest.

Every necessary day for the development of the corn crop was worth 20,000,000 bushels of corn. Cotton needed a longer time and offered to pay 30,000,000 pounds of lint for the favor of each day of growth during the full term. Wheat offered over 6,000,000 bushels a day, tobacco 7,000,000 pounds, potatoes 3,000,000 bushels, and beets 6,000,000 pounds of sugar.

The entire wealth production of the farms was at stake and was dependent on a crop-growing season of sufficient length, and every one of its days was worth $50,000,000 to the farmer and to the Nation.

At the end of the harvest the farmer has provided the country with commodities that are equal to the average of recent years in quantity and vastly more than are needed for National consumption. His labor and his knowledge have been rewarded with products the sum of whose value is $7,412,000,000.

The miner can not restore the mineral to the mine. With the farmer it is different. The primal forces and atoms of the universe are his. The sun shines and the rain falls and the farmer applies his art and science to inexhaustible resources, ever adding enormously to the country's wealth, capital, credit, and welfare.

WEATHER BUREAU.

The creation of a research observatory at Mount Weather, Va., and the gathering together of a highly trained staff of men for the study of meteorological problems marks an important epoch in the development of meteorological science in this country. One of the first results achieved by that staff was the sending of meteorological instruments, by means of aeroplanes, to a greater altitude than has hitherto been accomplished. On October 3, 1907, the world's record for high flights was exceeded. On that day eight kites, in tandem, carried the meteorograph to an altitude of 23,111 feet above sea level. Daily observations of upper-air conditions have been continued for over three months in succession, practically without interruption, and it is probable that this record will be maintained indefinitely in the future. The observations obtained in this manner are placed before the forecast official in Washington each night. The latter is thus informed of the vertical gradients of temperature and the direction of the wind for altitudes varying on the average from one-half mile to 2 miles. These facts are of great importance in the making of forecasts for the

Middle Atlantic and New England States and for the elucidation of many problems of the upper air that hitherto it has been impossible to study.

WEATHER FORECASTS.

In the past forecasts of the weather, as is well known, have been based entirely upon the existing horizontal gradients of pressure and temperature at the surface of the earth. The formation of charts showing the distribution of temperature with increase of elevation above the earth's surface, which is now for the first time possible in our weather service, so graphically tells the story of the rise and fall of the thermal levels that the layman is able to comprehend their significance. It is apparent that when a comparatively deep stratum of abnormally warm or abnormally cold air persistently overlies a region the action of a moving cyclone or anticyclone on the weather experienced at the bottom of the atmosphere will be materially different from that which would be experienced were the upper air at a normal temperature.

The significance of these data from the view point of the forecaster is not yet fully understood, but certainly they present a fund of information that will be studied with profit by those whose duty it is to add to our limited knowledge of the science that must precede the art of weather forecasting.

The upper-air work at Mount Weather is thus described in detail because it is the one line of inquiry that at present holds out the greatest promise of immediate utility. The results already secured are deemed to be of such value that it is hoped means will be provided for the diligent prosecution of other lines of research work.

DESTRUCTION OF THE ADMINISTRATION BUILDING.

On the morning of October 23, 1907, the interior of the administration building at Mount Weather was discovered to be in flames. The fire spread so rapidly that the eight persons sleeping in the building that night barely escaped with their lives, two being seriously injured. It has been impossible to determine the origin of the fire. This building was used as an ordinary observing station such as is maintained at all of the various meteorological offices of the Bureau. It also contained the administrative offices and the kitchen, dining, sleeping, and general living rooms of the scientific staff.

When the structure is rebuilt it should be made entirely of fireproof material.

THE FORECAST SERVICE.

The forecasting service of the Weather Bureau continues to furnish useful information concerning the approach of untoward weather conditions, the occurrence of damaging floods in the rivers, and of

severe storms on the Great Lakes and the seacoast. Within the last year or so the river and flood service has been strengthened in its weak spots and somewhat enlarged by bringing into the system rivers which previously had no service. As now constituted it embraces practically all of the great navigable rivers of the country and many others. In view of the general desire for the improvement of navigation on the larger rivers and the development of the resources of the country tributary thereto, a strong river service becomes more important than ever.

SEISMIC DISTURBANCES.

The seismic disturbances which have occurred since the San Francisco disaster have fully aroused the scientific world to the importance of systematically studying these natural phenomena.

Exact knowledge of the character and magnitude of the motion of the ground when subjected to earthquake action is of vital importance to those whose business it is to design and erect the high structures now so numerous in all of our great cities. Earthquake-proof construction must be required, especially in great structures, even in regions which may seem to be immune; for probably it is only a question of time when some readjustment of the earth's strata under long accumulating stresses may occur in seemingly the most stable regions and an earthquake of greater or less severity be precipitated thereby.

Already action has been taken looking to the systematic study of earthquake phenomena by the formation of a National Bureau of Seismology in Strasburg, Germany. This organization is international in character.

It is submitted that this important work, since it affects the welfare of all the people, should be encouraged by the National Government, and that the Weather Bureau should be authorized to inaugurate and maintain systematic seismological observations within the United States and its Territories.

THE SALTON SEA.

The drying up of the Salton Sea, which now occupies a depression in the desert region of southern California, affords an opportunity of determining experimentally the rate of evaporation in the arid regions of the Southwest. In ten or fifteen years the sea will have disappeared, and in a somewhat shorter period its waters will have become so saline that its rate of evaporation will no longer be normal or representative.

RAINFALL AND EVAPORATION.

The two great factors which determine the amount of water available for purposes of irrigation are rainfall and evaporation. The Weather Bureau collects data of rainfall for all parts of the country,

but nothing is being done on the evaporation side of the problem. The demand for accurate information respecting the rate of evaporation is most pressing from hydraulic engineers who are called upon to draw plans for the construction of water-storage reservoirs in the various parts of the country and under widely varying climatic conditions. In addition to the needs of the engineer, a knowledge of evaporation in different climates is recognized as an important factor in the economy of plant life. The agriculturist should have the advantage of the most accurate information obtainable as to the loss of water from the soil by this process.

Reservoirs already constructed by private persons have largely failed of their purpose by reason of a lack of knowledge of the amount of evaporation. The great irrigation projects now under way in the semiarid regions and those which may be planned in the future will be greatly benefited by the knowledge which is here sought.

The Weather Bureau, in cooperation with the United States Reclamation Service and the United States Geological Survey, should enter upon a research looking to a solution of the problem.

FOREIGN METEOROLOGISTS STUDY AMERICAN WEATHER SERVICE.

It is probable that no other branch of science is as much indebted to the researches of citizens of the United States as is meteorology, Redfield and Espy, early in the nineteenth century, having been the first to collect the data, plot it, and exhibit to the world the cyclonic action of storms. Utilizing the knowledge thus made known and the further researches of the scientists of other nations, the United States has taken the lead in the practical application of meteorological science, our broad continental area and thorough electrical communication rendering it possible to bring an extensive system under one administrative head. The service is the result of an evolution, it being necessary to adopt new methods with each advancing step and to devise and invent appliances for the putting into effect of ideas that were unique. It has also required the application of discipline of military exactness in order to coordinate into an efficiently working machine 200 full meteorological offices with more than 900 auxiliary stations, and to produce an efficiently working unit that shall twice daily gather meteorological data from such a large area, collate and print it at many commercial centers, and, through the agencies of the press, the telegraph, the telephone, and the rural free delivery, place the deductions from the data before those who can make the most use of them.

Within recent years many scientific representatives of foreign governments have honored us by visits and by a study of the methods employed by the United States in the administration of its Weather Bureau.

BUREAU OF ANIMAL INDUSTRY.

THE MEAT INSPECTION.

The Federal meat inspection has been greatly extended and improved under the new law of June 30, 1906, and is now on a higher plane than ever before. Public confidence, which was unsettled by the agitation of the previous year, has been restored. The important matters of sanitation of slaughtering and packing establishments, preparation of meats and products, use of chemicals, preservatives, etc., and prevention of fraudulent labeling are now controlled and regulated, whereas formerly the Department had no authority over them, but was practically confined to an inspection before and at the time of slaughter to determine the health of the animals. The interstate transportation of meats and meat food products is also now under control.

Naturally a very marked increase has occurred in this branch of the work, as compared with the preceding year. Inspection was conducted at 708 establishments in 186 cities and towns during the fiscal year 1907, whereas in 1906 the corresponding totals were 163 establishments and 58 cities and towns. The number of employees engaged on meat inspection July 1, 1906, was 981; on July 1, 1907, this force had been increased to 2,290.

The meat inspection covered 50,999,034 animals, practically all of which were inspected both before and after slaughter. Of these, 149,792 carcasses and 529,876 parts were condemned for disease or other cause. The cost of this inspection was $2,159,474.12. While, therefore, all of the $3,000,000 appropriated by Congress for this purpose was not expended, it should be borne in mind that the law was in full force but nine months of the fiscal year, and that the service was constantly expanding during the year. The rate of expenditure during the first half of the period was considerably below the normal requirements under the new law. By using in the marking of meats a metal stamp with special ink prepared by the Department, instead of the label formerly employed, a saving estimated at half a million dollars a year is being effected.

In addition to the veterinary inspection there is a subsequent inspection of the meats and products, consisting of an examination by experts in the curing of meats and a laboratory inspection to determine the bacteriological and chemical condition of the finished products. For carrying on this work laboratories have been established at New York, Chicago, East St. Louis, Kansas City, Omaha, and San Francisco. As a result of this inspection more than one hundred different varieties of products which had been in circulation prior to the new act were found to be in conflict with it. Since then, however, the examinations show that as a general rule the packing

houses have been complying with the law in regard to preservatives and coloring matter, and also in regard to proper labeling.

The microscopic inspection for trichinæ, which has heretofore been applied to pork intended for export to countries requiring such inspection, has been discontinued. The experience of this country as well as of Germany has shown that under practical conditions a reliable inspection for trichinæ is not possible, as it is sometimes necessary to examine a carcass microscopically as many as twenty or thirty times before the parasites are found. Germany, while requiring our certificates of microscopic inspection, was not willing to accept them as conclusive, but reinspected all pork imported from the United States. As the inspection seemed to be of little or no benefit, but of considerable expense, it was stopped. The microscopic inspection for trichinæ has never been carried on or considered necessary for the protection of the American public, as thorough cooking or thorough curing kills the parasites, and it is not the custom of Americans to eat pork in a raw, uncured state.

As it is often difficult to determine just where to draw the line between what should be passed and what condemned in meat inspection, especially where carcasses are affected in some degree with tuberculosis, a commission of experts outside of the Department was appointed to consider and advise with regard to those portions of the Department's meat-inspection regulations relating to the disposal of carcasses affected with various diseases and abnormal conditions. This commission consisted of Dr. William H. Welch, professor of pathology, Johns Hopkins University, chairman; Dr. L. Hektoen, professor of pathology, University of Chicago; Dr. M. J. Rosenau, director of the hygienic laboratory, United States Public Health and Marine-Hospital Service; Dr. Joseph Hughes, president of the Chicago Veterinary College; Dr. V. A. Moore, professor of comparative pathology, Cornell University; Dr. Leonard Pearson, dean of the veterinary department of the University of Pennsylvania, and Dr. Charles Wardell Stiles, chief of the division of zoology, hygienic laboratory, United States Public Health and Marine-Hospital Service, secretary.

The report of the commission has been received and is being considered in the preparation of revised regulations. The general conclusion with regard to the portion of the regulations under consideration was that "if there be any general error in the regulation this is in favor of the public rather than in favor of the butchers and packers."

While the Federal inspection insures the wholesomeness of the product of establishments doing an interstate and export business, the Federal power can not reach the numerous small, local establishments whose product is sold entirely within a State. Some of the

worst conditions have been found at places of the latter kind, and the tendency of a strict inspection is to cause diseased and unfit animals to be sent to slaughterhouses having no inspection. If the public is to be fully protected, the Federal inspection must be supplemented by State and municipal inspection. An inspection such as is carried on in some places—consisting merely of an examination of meat as offered for sale in the market and the condemnation of any that may be tainted or spoiled—is not sufficient. The purchaser can usually detect spoiled meat. What is more important is a careful veterinary inspection of all carcasses at the time of slaughter, to exclude those which are diseased. There is great need for the States and municipalities to apply such an inspection at all places not under Federal supervision. In the meantime the Federal inspection label offers to the consumer a guaranty that the meat bearing it comes from healthy animals and has been prepared under sanitary conditions.

INSPECTION OF EXPORT ANIMALS.

The inspection of the Bureau of Animal Industry also extends to the export trade in live stock. Animals to the number of 536,291 were inspected for export, and 484,254 were again inspected on arrival at British ports by Bureau inspectors stationed there. Seven hundred and forty-one inspections were made before clearance of vessels carrying export animals, and they were required to conform to certain regulations as to space, fittings, attendants, feed, water, ventilation, etc. The losses of animals in transit were only about one-quarter of 1 per cent.

ERADICATION OF THE CATTLE TICK.

The progress made in the eradication of the cattle tick which transmits Texas fever demonstrates that the ultimate extermination of this costly pest is entirely practicable, if Congress and the State legislatures will provide the necessary means. The great benefit which will accrue to the cattle industry of the South, and incidentally to the country at large, from the success of this work will abundantly justify the necessary expense.

The work of tick eradication was not actively begun until July 1, 1906; yet as a result of work done to October 31, 1907, there have been, or will in the near future be, released from quarantine certain areas in Virginia, North Carolina, Georgia, Tennessee, Arkansas, Oklahoma, Texas, and California, amounting to approximately 60,000 square miles, and good headway has been made in still other areas. The work has been pursued in cooperation with State authorities in the States above named and in South Carolina, Alabama, and Louisiana. Complete returns to October 31 last show that during the first ten months of the present calendar year this work has included 2,307,934 inspections and 775,795 disinfections of cattle.

Various approved methods for the eradication of ticks have been used, including pasture rotation and dipping, spraying, and hand-dressing with oil and oil emulsion.

CONTROL OF CONTAGIOUS DISEASES.

The number of cattle moved from the area quarantined for Texas fever to northern markets during the quarantine season of 1906 was 1,000,629, shipped in 36,213 cars. These cattle were all for immediate slaughter and were handled under the supervision and regulations of the Department. There were also inspected in the provisionally quarantined areas of Texas and Oklahoma 126,238 head of cattle, which were permitted to be moved north for purposes other than immediate slaughter. Supervision was exercised over 137,902 dippings in crude petroleum and over the cleaning and disinfection of 36,895 cars.

The prevalence of sheep scab has been considerably reduced, and since the close of the fiscal year the quarantine for this disease has been removed from Wyoming and Idaho, and it is expected that later it may be removed from Utah. Such headway has been made as to give hope that, with another year's work, the disease may also be eradicated from Colorado, New Mexico, and Arizona. The total number of inspections of sheep for scabies was 62,625,831 (including 68,264 goats inspected for scabies at slaughtering centers), and the total number of dippings was 12,133,466, of which 2,640,408 were redippings.

The eradication of cattle mange or scabies is being continued, but has been retarded in some localities by the removal of fences from the public domain in conformity with an act of Congress, and by conditions on the open range where cattle travel great distances and mingle without restraint, making it easy for disease to spread and difficult to enforce proper sanitary measures. Under these circumstances it was found necessary to adopt more stringent regulations for the suppression of the disease, and better results are expected. During the fiscal year 1907 there were 15,243,323 inspections of cattle for scabies and 466,623 dippings. It would be of great advantage in combating contagious diseases of live stock if the public-land laws were so amended as to permit the leasing and fencing of the public domain so that owners might have better control over their animals and the promiscuous mingling of stock be largely prevented.

Although the troublesome venereal disease of horses known as maladie du coït or dourine, which prevailed in several of the Western States, was stamped out a year or more ago, owing to the insidious character of this disease it was thought best to continue inspection in the previously affected territory to make sure that no trace of the

contagion remained. Nearly 15,000 inspections were made during the fiscal year, and all suspected cases of which information was received were investigated, but without finding a single case of the disease. It therefore seems certain that as the result of diligent work for several years this disease has been completely eradicated and that there will be no recurrence of it unless the contagion is again introduced from abroad.

INSPECTION AND QUARANTINE OF IMPORTED ANIMALS.

A careful system of inspection and quarantine of imported animals is maintained in order to protect our domestic live stock from the contagion of destructive animal diseases which are found in other parts of the world. All animals offered for importation are required to be inspected, and certain kinds when coming from certain countries are required to be quarantined for a sufficient period to insure their freedom from contagion. Cattle are required to pass the tuberculin test for tuberculosis. During the fiscal year 147,897 imported animals were inspected, and of these 1,448 were quarantined. Blood tests are made of animals whose origin is such as to make it at all probable that they carry in their blood the causative agent of surra, a destructive disease which prevails in the Orient. In an importation of 51 cattle from India 17 were found to harbor this micro-organism and were destroyed. It is fortunate that the disease was detected and that the affected animals were slaughtered before the contagion could be introduced into this country. The absolute prohibition of the importation of all species of animals likely to harbor the parasite, from the sections where the disease exists, seems the only safe plan.

TUBERCULOSIS INVESTIGATIONS.

Tuberculosis has continued to be the subject of special investigations by the Bureau of Animal Industry. Further work has confirmed the view that the location of tuberculous lesions in the body is quite independent of the point at which the infectious material enters, and that the frequency with which tuberculosis occurs as a lung disease justifies the conclusion that the lung is not always infected directly through the air.

The work of the year also demonstrated that the commonest made for the discharge of tubercle bacilli from the bodies of tuberculous cows is with their feces, that about 40 per cent of the tuberculous cows that show no outward symptoms are expelling and scattering tubercle bacilli, and that tubercle bacilli passed with the feces of tuberculous cows are actively pathogenic. When it is borne in mind how frequently milk contains cow feces, and that the percentage of dairy cows known to be tuberculous is considerable, the facts presented

seem to warrant the conclusion that tuberculous cows are responsible in a great measure for the prevalence of tuberculosis in the human family.

During the past year there has been considerable agitation in the District of Columbia with reference to the improvement of its milk supply. The Commissioners of the District appointed a committee or conference composed of scientists, physicians, veterinarians, milk producers and dealers, attorneys, and business men to consider methods for obtaining pure and wholesome milk and to advise as to proper legislation to that effect. In order to assist in this work, the Secretary of Agriculture, about April 1, directed the Bureau of Animal Industry to apply the tuberculin test to the herds of all dairymen who might request such action. In tests made by the Bureau and by the health department of the District of Columbia, covering 37 herds with 658 cattle, 18 per cent were found to be tuberculous. Some of the reacting animals had every appearance of being in good health, and several of this kind were removed to the Bureau Experiment Station, where it was found that they were discharging tubercle bacilli in great numbers and that their milk produced tuberculosis in guinea pigs.

The examination of sediment taken from the cream separators of public creameries throughout the country has demonstrated the presence of tubercle bacilli in about one-fourth of the samples. These creameries must be regarded as an important source of tubercular infection for the hogs and calves that are fed upon the separated milk that is returned to the farm from the creamery. State laws should be enacted requiring the sterilization of all milk and other products before they are returned by the creamery to the farmer for use as food for live stock.

The length of time that tubercle bacilli will live and retain their virulence in butter under usual market conditions is also being made a subject of investigation, but the work has not proceeded far enough to give definite results.

For the past five years careful and extensive scientific studies have been made of the comparative characters of human, bovine, and avian tubercle bacilli, and the results have been published.

The immunization of cattle against tuberculosis is being investigated.

HOG CHOLERA INVESTIGATIONS.

Continued experiments with hog cholera have again demonstrated that the contagion consists of a virus which exists in the blood and other fluids of diseased animals, but which can pass through the finest filter, is invisible under the microscope, and therefore can not be isolated or discerned by any of the usual methods.

The method of immunizing hogs against cholera, to which reference was made in last year's report, has been tested much more extensively, and the results show quite clearly that a comparatively certain method of protecting hogs from this disease has been secured. Hogs that have recovered from the disease or that have been exposed without contracting it are injected with suitable amounts of virulent blood from diseased hogs, and thus their immunity is heightened. The blood serum of these immunes is then used in vaccinating the hogs which it is desired to protect. The method giving the best results is to inject blood from diseased hogs simultaneously with the immune serum. By this method of vaccination hogs are protected for three and a half months or more, while by the use of the serum alone the protection can not be expected to last longer than three weeks. The immunized hogs probably retain for several months their power to furnish a potent serum. The serum probably can not be used successfully as a curative agent unless administered within four days after actual infection has taken place.

In order that this method may be more extensively tested, it is expected to make arrangements for the State experiment stations to test serum which will be furnished to them by the Department. It is hoped that the practicability of this method for combating hog cholera may thus be determined within a short time.

OTHER PATHOLOGICAL WORK.

Rabies continues to prevail in many parts of the country. When requested the Bureau examines suspected cases and makes diagnoses. During the year 47 post-mortem examinations were made in the pathological laboratory, and in 27 cases (all dogs except two—a sheep and a cat) the diagnosis was positive. Twelve of the positive cases were from the District of Columbia, 6 from Virginia, 5 from Maryland, and 1 each from Maine, Wisconsin, North Carolina, and South Carolina. In addition, several cases were investigated at the Bureau Experiment Station, and some of the animals which had been bitten were kept under observation and the disease studied as it developed in them.

A disease of the bobwhite, somewhat similar to grouse disease in Great Britain, appeared in several sections of the country, and as it seemed to threaten extensive destruction to this popular game bird an investigation into its cause and nature was promptly undertaken, and a preliminary report was published to assist in combating it.

The importation of cattle from India, before mentioned, some of which were found to carry in their blood the minute parasite which is the specific cause of the disease known as surra, afforded an opportunity for a study of that disease. Much was learned of its char-

acter and of the remarkable periodical development of the living parasites within the blood of the affected animals.

Among other lines of work in progress is an investigation of swamp fever in horses in cooperation with the Minnesota Experiment Station. The results so far indicate a probability of obtaining a satisfactory treatment for the disease.

WORK ON ANIMAL PARASITES AND PARASITIC DISEASES.

In the first series of field experiments in connection with a study of the life history of the roundworms of sheep, with the view of determining if possible methods of preventing infection, a system has been worked out by which lambs may be raised free from hookworms and stomach worms, and the length of time during which infection persists in pastures under certain climatic conditions has been determined. This information has been published.

An investigation of the distribution of the gid parasite of sheep in Montana shows that it is widely prevalent there. A comparison is also being made between specimens of gid parasites of American and European origin, in order to determine whether the two are of the same or different species.

An investigation is in progress concerning the so-called "palisade worm" disease of horses, which occasions the loss of a large number of animals annually in Wyoming and neighboring States.

SHEEP DIPS.

Cresol dips and coal-tar creosote dips to be used in the official dipping of sheep for scabies have been added to the two classes of dips previously sanctioned for this purpose, namely, the lime-and-sulphur and tobacco-and-sulphur dips. A large number of proprietary substances belonging to these four classes have been submitted for examination, and permission has been granted for the use in official dipping of those which were found to conform to the prescribed standard.

DISTRIBUTION OF BLACKLEG VACCINE, TUBERCULIN, AND MALLEIN.

The distribution of vaccine to prevent blackleg in cattle has been continued with good results, about 1,250,000 doses having been prepared and distributed to stock raisers during the fiscal year. This disease is becoming much less of a menace to young cattle than it was some years ago, when the mortality without vaccination amounted to over 10 per cent in certain sections. It is evident that the vaccine in a few years has not only saved many animals to the

breeder, but has gone far toward the eradication of blackleg from the pastures of the country.

Tuberculin and mallein, for the diagnosis of tuberculosis in cattle and glanders in horses, are furnished to official veterinarians and health officers. During the year 129,050 doses of tuberculin and 41,012 doses of mallein were prepared and sent out, more than half of the mallein being furnished to the War Department.

ANIMAL HUSBANDRY WORK.

Experimental work and investigations are being carried on by the Bureau of Animal Industry in connection with the breeding of horses, cattle, sheep, and poultry, besides some small animals, and in the feeding of hogs, cattle, and poultry, most of the work being in cooperation with State experiment stations.

HORSE BREEDING.

The work in the breeding of American carriage horses, in cooperation with the Colorado Experiment Station, is progressing satisfactorily. During the fiscal year 11 foals, the progeny of selected parents, were dropped—2 males and 9 females. No additional horses were purchased.

The work in breeding Morgan horses, which is being carried on in cooperation with the Vermont Experiment Station, has been greatly extended through the generosity of a public-spirited citizen of Vermont, who donated to the Department a farm of 400 acres near Middlebury, to be used in these operations. There were in the Vermont stud on July 1, 1907, 1 stallion, 9 brood mares, 1 two-year-old filly, 8 younger fillies, and 1 weanling colt.

SHEEP BREEDING.

There is great need of a breed of sheep suitable to the range conditions of the West, the requirements being for sheep that will yield a profitable clip of wool, produce good mutton lambs, and stand flocking in large numbers. It is believed possible to combine these characteristics in one breed, and with this idea in mind an experiment was begun in the fall of 1906 in cooperation with the Wyoming Experiment Station. Eighty-nine ewes and four rams have been purchased for foundation stock.

BREEDING MILKING SHORTHORNS.

Experiments in developing a milking strain of Shorthorn cattle have been begun in cooperation with the Minnesota Experiment Station and with nine Minnesota breeders, the latter having agreed to allow their herds to be used and to manage them according to instructions of the Department and the station.

BEEF PRODUCTION IN THE SOUTH.

Experiments in steer feeding under southern conditions have been conducted for the past three years in cooperation with the Alabama Experiment Station, and another experiment in the Tennessee valley (northern Alabama) is now in progress. The object of these experiments is to show what can be done under farming conditions in the way of improving the native cattle for beef purposes by means of proper feeds and the use of pure-bred bulls, and to make southern farmers familiar with the use of their by-products for meat production.

POULTRY BREEDING AND FEEDING.

The poultry investigations in cooperation with the Maine Experiment Station are being continued, the objects being to increase egg production and to compare the yields and welfare of hens when kept in flocks and inclosures of different sizes. From year to year the better laying hens are selected by their records in trap nests and mated with the sons of heavy layers. The results have shown that by the methods used hens with greater laying capacity can be obtained.

A poultry-feeding experiment was begun in the fall of 1906 at the Bureau quarantine station at Halethorp, Md., to determine the respective values of the moist mash, dry mash, and hopper methods of feeding. Further experiments will be conducted at the Bureau Experiment Station near Washington, D. C., which is a more favorable location and where a suitable equipment is now being built.

ANIMAL NUTRITION.

The experiments in animal nutrition with the respiration calorimeter, in cooperation with the Pennsylvania Experiment Station, during the fiscal year have consisted of a continuance of the investigations concerning the influence of age and individuality upon the metabolism of cattle, and eight additional experiments, together with a number of check tests to control the accuracy of the apparatus. A bulletin upon the energy value of red-clover hay has been prepared for publication.

At the beginning of the new fiscal year, July 1, 1907, the work in animal nutrition was materially enlarged by the addition of cooperative experiments in feeding beef cattle at the Missouri Experiment Station. A large number of steers are being fed to compare the results of feeding 2-year-olds and calves, and exhaustive investigations are planned in the feeding of steers from birth to maturity. Representatives of different lots and ages, with supplies of the feed used at the Missouri Experiment Station, will be sent to the Pennsylvania Experiment Station for tests in the respiration calorimeter.

CLASSIFICATION FOR AMERICAN CARRIAGE HORSES.

The Bureau of Animal Industry has been instrumental, by means of a cooperative arrangement with the American Association of Trotting Horse Breeders, in preparing a uniform classification for American carriage horses. The adoption of this classification at State fairs and similar gatherings is expected to aid materially in fixing a uniform type of horse and to enable the farmer to appreciate more the value of the horses raised by him and thus secure some of the large profits made by middlemen, who now buy cheaply from the farmers and after a few months of handling and finishing often sell at fancy prices.

WORK RELATING TO THE DAIRY INDUSTRY.

A large amount of work, both educational and research, has been accomplished in the Dairy Division of the Bureau of Animal Industry during the year.

SOUTHERN DAIRYING.

Considerable effort has been expended toward improving the dairy conditions of the South under a special appropriation made by Congress for this purpose. Nine men have been engaged in the work in seven States. The work has enlisted the attention and good will of the farmers. Assistance has been rendered in the remodeling of old barns and the building of new ones, the construction of silos, the selection and breeding of herds, and the keeping of records of feeds and of the products of the dairy herds. Local market conditions and the sources of the supplies that are brought into the South from outside territory have been investigated.

Many farmers have been induced to keep records of their herds, so as to show the cost of feed and the amount realized from the products both before and while carrying out the suggestions made for improved methods. Such records have been kept for 70 herds, comprising 1,606 cows. The results from 16 herds have been compiled for illustration and show an average increase of $3.75 in the monthly production of each cow. This is a striking example of the practical results to be obtained by the adoption of better dairy methods in the South.

The work has met with uniform favor. So encouraging have been the results of the Department's work that similar work is being taken up by some of the States. It is believed that after this special educational work has been well started the Department should withdraw and the States should continue it.

BUTTER INVESTIGATIONS.

Investigations to determine the cause of fishy flavor in butter are being continued and progress has been made, but a complete solution

has not yet been reached. This trouble is the cause of heavy loss to the trade.

Experiments have also been made concerning the amount of acidity in cream and its effect upon the keeping quality of butter. Several thousand pounds of butter were made from cream having various degrees of acidity and the butter was stored at different temperatures to test its keeping qualities. It was found that pasteurized cream, churned sweet without starter, produced remarkably fine butter that kept without deterioration for weeks after it was taken out of storage. This was at such marked variance with the general views of butter makers that it has been deemed best to repeat the experiments during the coming year. If the findings of the past year are confirmed, almost a complete revolution in the methods of making butter from sweet cream seems likely to occur.

During the year an extremely simple and rapid method of determining the amount of moisture in butter and other products—a great need of the butter makers—was worked out by the Dairy Division. Application for patent has been made in such a way that the apparatus and method may be used by any person in the United States without payment of royalty.

LABORATORIES AT ALBERT LEA, MINN.

In the spring of 1907 laboratories for butter and cheese investigations were established at Albert Lea, Minn., in cooperation with the Minnesota Experiment Station. Bacteriological and chemical laboratories have been built and equipped, and arrangements have been made for a large supply of milk to be used for experimental purposes.

CHEESE INVESTIGATIONS.

The cheese investigations consist of three general lines, namely, soft-cheese experiments in cooperation with the Storrs (Conn.) Experiment Station, Cheddar cheese investigations in cooperation with the Wisconsin Experiment Station, and Swiss cheese investigations at Albert Lea, Minn. The work on the Camembert type of cheese, which has been in progress for the last few years, has been practically completed, and a bulletin giving directions for making this kind of cheese was published during the year. At present a study is being made of the problems involved in the manufacture of Roquefort cheese. These experiments are intended to avoid the necessity of importing European cheese, as we have cheaper grasses and mill feeds than any other country.

IMPROVEMENT OF THE MILK SUPPLY.

Following the success of the milk and cream competitive exhibition in connection with the National Dairy Show at Chicago in 1906,

similar contests have been held in other cities and have had a marked effect in the improvement of the milk supply.

A feature of the year's work was the investigation of the milk supply of Washington, D. C. Nine hundred and sixteen dairies and dairy herds, with 16,446 cows, were inspected and rated in accordance with a score card prepared by the Dairy Division. With few exceptions the conditions found were very unsatisfactory, the average score being only 45 out of a possible 100. This result may be considered as giving some indication of the quality and condition of the milk supply of the country, as it is believed that the conditions around Washington are no worse than those existing around other large cities.

The Department is taking an important part in the general movement for a better milk supply, and assistance in that direction has been rendered to a number of cities. Insanitary conditions of milk production and the prevalence of tuberculosis in dairy herds are two evils that should be overcome. Dairy products, which form a large part of our food supply, need special attention in order to insure wholesomeness. Is it the desire of Congress to supplement existing legislation by giving the Department authority to inspect all dairy cows and dairy establishments whose products are to enter interstate or foreign commerce, so as to exclude products of diseased cows and products prepared under insanitary conditions, according to the principle on which the meat inspection is based?

CREAMERY INVESTIGATIONS.

The economic features of the creamery business have received special attention during the past year. Reports were solicited from creameries with a view to giving them assistance in their methods of conducting the business. At the close of the year from 500 to 600 creameries were reporting monthly. A careful analysis of these reports shows a heavy loss to many creameries and to the farmers supplying them, owing to lax methods and the absence of system in keeping records. These losses are computed to be not less than $5,000,000 a year for the entire country. Whenever reports indicating defective work are received, letters are written pointing out the defects and suggesting remedies.

The market inspection of butter at Chicago and New York has been continued with a view to assisting creameries to improve the quality of their product. Large quantities of butter deficient in quality are found in these markets. When requested by the shipper, the experts of the Dairy Division examine a shipment on its arrival at market and send to him promptly a reliable report as to its condition and quality. If the butter is not of good quality, they state what the defects are and make suggestions for overcoming the trouble. This work has resulted

in a general improvement in the quality of the butter received on the market and has thus enabled the creameries to obtain better prices.

OTHER DAIRY WORK.

Farmers and dairymen are being encouraged to keep records of their dairy herds. It is believed that if this practice were more generally adopted much pecuniary and other benefit would accrue to the owners of dairy cows.

The work of planning dairy buildings of various kinds has been continued. During the year 56 different plans have been drawn and 504 blueprints made and sent out.

A thorough and prolonged study of the problems connected with the secretion of milk has been undertaken in cooperation with the Missouri Experiment Station. Other work includes a study of pasteurization and other processes which may affect milk from a bacteriological and chemical standpoint.

The Dairy Division installed and conducted at the Jamestown Exposition what was termed a modern dairy plant, showing the equipment and methods for a small dairy farm and for a large city milk business. Literature was distributed and stereopticon lectures were given.

RENOVATED BUTTER INSPECTION.

The Dairy Division carries out the provisions of the law of 1902 respecting the inspection of renovated butter, also known as "process" butter. There was produced during the year 63,000,000 pounds of this product, at 49 factories. This production represents an increase of 15 per cent over the previous year.

BUREAU OF PLANT INDUSTRY.

The work of the Bureau of Plant Industry covers a wide field. The Bureau is striving to aid the farmer in protecting his crops from destructive diseases; it points out ways of improving crops by breeding and selection, as well as by better methods of tillage and better methods of management; it explores the world for new crops, and when these are found and introduced, it encourages and supports the efforts made in their production until new industries are established. The principal results secured during the year along these and other lines are briefly set forth under the following headings.

THE WORK OF THE PATHOLOGISTS.

During the year the pathologists of the Bureau have been called upon to undertake a number of new investigations and to continue important lines of work already under way.

ERADICATION OF PEAR BLIGHT.—It was pointed out in my last report how important work had been inaugurated on the Pacific coast with a view to preventing the destruction of the extensive pear orchards, valued at many millions of dollars. Pear blight has been and is devastating these orchards, and the Department, in cooperation with State authorities, has been working to check it. The systematic work undertaken in the matter of eradicating blight from the orchards through winter pruning has led to beneficial results. The progressive orchardists who have carried on the work thoroughly have succeeded in holding the disease in check and in securing a profitable crop of fruit from the treated orchards. In other cases, however, principally as the result of careless treatment or no treatment at all, many orchards have been destroyed. The work will be continued this coming season and every assistance possible given to those orchardists desirous of fighting the disease. As already indicated, the Department has had the hearty cooperation of the State experiment stations and other State authorities, who are fully alive to the importance and necessity of doing all within their power to aid the fruit growers of the respective States in which they are located.

CONTROL OF APPLE DISEASES.—Another line of work which has been carried on successfully during the past year has had for its object the control of apple diseases in the Ozark Mountain region. This section of the country is developing into a fine fruit region, and the value of the orchards is increasing yearly. Since the orchards have come into bearing, however, various serious diseases have appeared, and the vital question of how best to control these diseases has arisen. Some of the work started last year in Nebraska and localities in Missouri had to be discontinued on account of the destruction of the fruit by cold. In a considerable portion of the Ozark region, however, there was a good crop of fruit not injured by cold, and in these orchards the control of bitter rot, black rot, and the fruit blotch was again practically complete where the methods recommended by the Department were carried out, from 95 to 98 per cent being saved in the sprayed orchards. In all this work combination treatments have been made in order to prevent both diseases caused by fungi and injuries produced by insects. In this work the Bureau of Plant Industry is cooperating with the Bureau of Entomology.

PREVENTION OF FOLIAGE INJURY IN SPRAYING.—For a number of years it has been a problem with pathologists to find some successful way of treating the peach with fungicides in order not to injure the foliage. Some of the standard fungicides often cause complete defoliation. For this reason it has been found difficult to control a number of serious diseases affecting the peach by any of the ordinary treatments. This year it was discovered that a sulphur wash made by combining lime and sulphur, with no other heat than that pro-

duced by the slaking of the lime, gave a preparation which was not injurious to peach foliage and which prevented the scab and reduced peach rot to 10 per cent on the sprayed trees, whereas unsprayed trees had 75 per cent of the disease. This fungicide, further, completely prevented the leaf-spot fungi and produced no injury whatever, either to foliage or fruit. While this preparation has been previously used in winter when the trees were dormant, this is the first time it has been tried on trees in active growth, with the success as indicated.

Control of California peach blight.—Last year mention was made in this report of a very serious disease of the peach in California, popularly known there as "peach blight." Experiments were conducted during last fall and winter for the control of this disease, and, as the result of this work, it was found that the disease could be completely controlled by the use of standard Bordeaux mixture or lime and sulphur wash applied early in the fall, about the time of the first rains. The methods recommended by the Department were widely used in California the past season with complete success, and we have been reliably informed that the treatment has meant many millions of dollars to the peach industry of that State.

Study of crown gall diseases.—The pathologists in this Department and in some of the experiment stations have for a number of years had under investigation a disease of fruits commonly known as "crown gall." Heretofore no organism has been definitely proved to be the cause of this disease. The results of the Department's work the past season indicate that there are two types of the malady. One form, which occurs in apples, producing hard galls, appears to be noncontagious, while the other, the soft gall, which occurs occasionally on apples and is the common form on stone fruits, especially the peach and plum, is very contagious. Two of our pathologists working on a similar disease in another plant have isolated an organism which produces galls practically identical with the soft crown gall on the peach, plum, hop, and numerous other plants. This is an exceedingly important line of investigation and doubtless will pave the way for securing information which will be worth a great deal to the fruit interests of the country.

Cooperative work on forest diseases.—The great interest in all matters pertaining to the protection of our forests and forest trees has led to the further organization of work in the Bureau having for its object the special study of forest pathology. In order to carry out this work to the best advantage, cooperative arrangements have been made with the Forest Service to the end that the strictly pathological work is conducted by the Bureau of Plant Industry, while the practical application of laboratory discoveries is worked out and applied in the field by the forest experts.

NEW CROPS AND NEW INDUSTRIES.

The general policy of the Department, inaugurated several years ago, having for its object the development of home industries for the purpose of keeping money in the hands of our own people, has been followed during the year. Elsewhere in this report figures are given showing the immense amount of cash we still send abroad for things that we might grow at home. During the year experts of the Bureau of Plant Industry have been engaged in exploring foreign countries, securing new plants worthy of trial here.

ORIENTAL PLANT EXPLORATIONS.—China has proved a fruitful field for this work, and an explorer has been kept there constantly during the year. His work has taken him through the little-known regions of southern Siberia, the border of Manchuria, the excessively dry mountains west of Pekin, and through the fertile country between Pekin and Hankau. This explorer has sent to this country over a thousand living seed and plant specimens for trial. Among these are promising blackberries and currants from northern Korea; a north Manchurian apple; a collection of 24 named pears from north China; several bush cherries and plums and peaches from northern Siberia—perhaps the very northern limit of peach culture in the Orient; drought-resistant alfalfas; dry-land rices; staple foods of the native Manchurians, but unknown to us, from regions where the climate is similar to that of the Dakotas; and a cherry noted for remarkable earliness, ripening its fruit in mid-April in northern California. Besides these, the explorer has sent in a large number of ornamental plants which our nurserymen have been for some time anxious to secure, because of the unusual hardiness of these north China species.

NEW ALFALFAS AND CLOVERS.—During the year an explorer was sent out for the purpose of securing forage crops and was still abroad when my last report was submitted. He has returned with seeds of the yellow-flowered Siberian alfalfa, and these seeds have grown into promising plants in the severe climate of the Northwest. The results of their trial will determine whether we shall import large quantities of the seed, as we have previously done with the Turkestan and Arabian alfalfas, both of which continue in their respective territories to gain in popularity. The Toten clover, secured from Norway, where it is cultivated for its extreme hardiness, is being tested in the Dakotas.

Two of the most interesting and promising introductions of the year were secured through the cooperation of the American minister at Pekin. Forty years ago a French missionary found alfalfa growing in the drier parts of Mongolia. In connection with the life-history studies being conducted by the Bureau, information was secured regarding this plant, the facts indicating that alfalfa

was introduced into China about 120 B. C., and that it had been grown in the dry, cold regions of Mongolia ever since. Full information regarding this crop and one or two others was forwarded to our minister, and through his kindness small quantities of seed of alfalfa, a naked oat, and one or two other promising things were forwarded to us. The accounts sent by the missionaries who aided the minister make it seem very probable that the alfalfa is grown under dry-land conditions, and it is hoped the plant will prove a valuable addition to the collection of varieties now being studied in a scientific and practical way at various stations in the West.

New rice varieties.—For the rice growers of the South there have been introduced 46 varieties from different parts of the world, among them the One Hundred Day rices—early sorts, which, in Japan, give crops when ordinary rices fail.

Development of a mango industry.—The fruit growers of our tropical possessions have had their interest in mango growing stimulated by the fruiting of some of our East Indian fine-flavored varieties. All the local nurserymen are ready to sell in quantity several of the introductions of the Department, and not only are the experiment stations of Hawaii and Porto Rico taking up this fruit, but, what is especially important, private plantation owners are planting out orchards of our introduced sorts.

Bamboo introductions.—The growing scarcity of wood for manufacturing purposes has led the Bureau to make some extensive investigations of bamboo culture in Japan and other countries. Already a number of varieties have been introduced and steps have just been taken for the inauguration of a considerable number of plantations of these important plants in different parts of the South.

Encouraging the production of raw matting material.—Reference has been made in previous reports to the encouragement which is being given to the matting industry of this country. The Department is anxious that we grow the raw material for the manufacture of this important product, of which we import five or six million dollars' worth annually. Our explorers have succeeded in securing an abundance of young stock of Oriental and Egyptian matting plants, kinds which are essential to the success of the industry here. Plantations of these are being established in a number of portions of the South in cooperation with influential men who are in earnest in regard to making this industry a profitable one, if it is practicable to do so.

LIFE-HISTORY STUDIES OF PLANTS.

Closely allied with the extensive work of plant introduction are the studies of the life history of crops and crop plants. This work has nothing to do with the mere testing of varieties. Life-history

studies have for their object the securing of knowledge of the requirements and limiting factors of different varieties—knowledge which will tell us why one variety will succeed and why another may fail. The failure properly interpreted may give us an insight into the life history of the variety which will permit of its successful utilization under different conditions.

THE DATE PALM.—The plan with the date palm has been applied to a number of our new and promising industries. The date palm was one of the first to be studied in this way and its scientific life history investigated. The results of these investigations, published some four years ago, enabled the Department to predict with reasonable certainty not only those regions where date culture was promising, but the particular varieties most likely to succeed. These predictions have been the means of saving thousands of dollars which otherwise would have been lost through the attempted culture of choice late-ripening dates in localities where they could not possibly have succeeded. During the spring and summer of 1907 a new date garden was established at Indio, Cal. This garden is high enough above sea level to be free from danger of overflow from the Colorado River, whose overflow at one time threatened to overwhelm the cooperative date garden at Mecca, Cal., some 10 miles to the eastward and 100 feet below sea level. A new date garden has also been established at Laredo, Tex., in a part of the Rio Grande Valley where the climate in spring and early summer is the hottest in the United States. It is believed that good dates can be grown in this part of Texas. The date palms in the Mecca garden, now from 2 to 3 years old, have begun to fruit freely, and the famous Deglet Noor and a number of other choice varieties have ripened perfectly, in spite of the fact that the season has been unusually cool. During the past year much interest has been taken in the planting of seedling date orchards in the hope of securing new varieties better adapted to American climatic conditions. Altogether some 150,000 date seeds have been planted in cooperation with growers in California, Arizona, and Texas. These growers will receive one or two offshoots from imported date palms for every 250 date seedlings set out in proper form.

PERUVIAN ALFALFA.—As another feature of the life-history work to which reference has been made, the past season has brought to light a new variety of alfalfa from the high table-lands of the Andes which is even more distinct from the ordinary alfalfa than the promising new sorts introduced from Arabia. Ability to grow at lower temperatures than any other known alfalfa enables this Andean variety, the seed of which was obtained from Peru, to grow throughout the winter in some of our Southwestern States. This form passes without injury through frosts which kill all ordinary alfalfas, while it is almost completely winterkilled in all of the States from the

Panhandle of Texas northward. This paradox is explained by the fact that its ability to grow at low temperatures and the autumn frosts which force other alfalfas into a dormant state do not cause this variety to cease growth and harden up its tissues.

HARDY CITRUS FRUITS.—Life-history studies are being applied also to questions concerning the further development of hardy citrus fruits. It has already been pointed out in previous reports how these hardy citrus fruits have been obtained by cross-breeding. In the spring of 1907 a large number of additional hybrids were made with a view to still further improve these types. In studying the life history of oranges a point has been developed which is of great importance in the matter of its hardiness. It is found that most oranges suffer from being forced into growth by warm spells of weather in winter; as soon as they have pushed into a tender growth they are injured by even a very mild degree of cold, which would be without effect on thoroughly dormant plants of the same variety. Studies now being made have for their object the securing of oranges which harden up their wood thoroughly in winter and are not easily forced into new and tender growth.

DROUGHT-RESISTANT OLIVES.—With the opening up of territory in the new Southwest heavy demands are being made upon the Department for information and light regarding the best crops for this extensive dry-land country. Southwestern Texas is a promising field, especially in the matter of arborescent crops. Investigations made in southern Tunis by an expert of the Bureau of Plant Industry have revealed the existence of extensive olive orchards in that region carried on where the annual rainfall is sometimes below 10 inches for several consecutive years and where the annual evaporation is over 100 inches. The olive grown under these extreme dry-land conditions has been imported and shows every promise of doing well in some parts of Texas and Arizona. Steps are being taken to establish experimental orchards of these drought-resistant olives in a number of sections throughout this southwestern region.

WILD FRUITS OF VALUE AS GRAFTING STOCKS.—Studies made the past year in the Southwest have revealed the existence of a number of species closely allied to the almond and peach of the Old World. Several of these occur in very dry situations and one is distinctly of promise as a stock upon which to graft almonds, apricots, and other stone fruits for culture on unirrigated lands. Another species growing in central Texas bears a very early ripening fruit of fair size which is said to be of delicious flavor. Plants of this "wild peach" have been secured and selections will be made with the hope of obtaining a native drought-resistant peach-like fruit which can be grown in regions where peaches do not now succeed.

COOPERATION WITH THE INDIAN SERVICE.—In carrying out these plans of experimental and demonstration work in the southwest, the Bureau of Plant Industry has secured the cooperation of the Indian Service. A testing and demonstration farm has recently been established on the Pima Indian Reservation at Sacaton, Ariz. The Office of Indian Affairs, Department of the Interior, furnishes the land, water, and labor, and the Department of Agriculture plans the experiments and furnishes all the necessary seeds and plants. The Indian Service is well equipped with lands and well-trained superintendents, and their cooperation will make it practicable to carry on demonstrations with numerous dry-land crops, such as alfalfa, dates, figs, olives, etc.

PROGRESS WITH FORAGE CROPS.

In addition to the special work on forage crops connected with foreign introductions and life-history investigations, the Bureau of Plant Industry has a corps of efficient officers and men engaged in investigations having for their object the extension of important forage crops already here, especially alfalfa and grasses. This work also has for its object the improvement of important crops of this nature and the introduction of these improved types or strains wherever they are likely to prove of value.

EXTENSION OF CULTURE OF ALFALFA AND OTHER LEGUMES.—The introduction of leguminous crops throughout the different farming sections of the country is considered of the highest importance. The future maintenance of fertility is based on a wise use of such crops. During the year extensive work was carried on, having in view the extension of alfalfa culture into those portions of the country where it is not now a staple crop. About 500 carefully planned experiments were conducted with farmers the past season in cooperation with State experiment stations. In general, cooperators have shown much enthusiasm in these experiments and have spared neither time nor expense to make their work successful. The effect of successful work of this kind in stimulating neighboring farmers to undertake the culture of the crop is especially gratifying.

ENCOURAGEMENT OF ALFALFA SEED PRODUCTION.—The great interest in alfalfa growing throughout the country has created a much larger demand for alfalfa seed than our farmers have been able to supply. This has brought about the heavy importation of foreign seed, some of which has been shipped even to the Pacific coast. With the enormous area devoted to alfalfa in this country we should be exporting seed rather than importing it. Investigations have shown that the yield of seed per acre is partly determined by the cultural methods used and is partly dependent upon varietal characteristics. Both

these lines of investigation are being vigorously prosecuted so as to bring about a great increase in the production of American alfalfa seed.

LARGE YIELD OF ARABIAN ALFALFA.—One of the most promising alfalfas tested during the year is the Arabian type. At Mecca, Cal., this alfalfa has yielded twelve cuttings in the year as against eight cuttings for ordinary alfalfa. At Chico, Cal., seven cuttings of the Arabian were obtained as against five of the ordinary.

POSSIBLE IDENTITY OF GRIMM ALFALFA WITH SAND LUCERN.—It has also been observed during the year that the Grimm alfalfa, which is recognized as an important one in Minnesota and other regions where the winters are severe, is possibly identical with the so-called sand lucern cultivated in Germany and Bohemia. The Bureau has been making special efforts to extend the culture of the Grimm alfalfa throughout the cold regions of the upper Mississippi basin, but has been hampered in this effort by lack of seed. The sand lucern also has been found to be very hardy, and it is proposed to test it fully side by side with the acclimatized Grimm strain.

IMPROVED TIMOTHIES AND OTHER GRASSES.—A special effort was made during the year to enlarge the scope of the work on improving grasses. The rapidity with which such important grasses as timothy can be improved has already been pointed out. During the year two of the State experiment stations have also taken up this line of investigation. The seed of improved timothies described in previous reports has been distributed for experimental purposes with encouraging results. Work on other important grasses has also been undertaken. Brome-grass, orchard grass, redtop, and meadow fescue have received special attention in this direction.

ENCOURAGEMENT OF COWPEA CULTURE.—One of the most important forage crops, for the South at least, is the cowpea. During the year extensive investigations have been made of this crop, the principal object being to secure cheaper and better seed so as to bring about a great increase in cowpea culture. Special machinery has now been developed for harvesting the upright-growing varieties. The need is for good varieties producing small, hard seeds that will not crack and that retain their vitality for more than one year. Many new varieties have been secured from foreign countries and a large number of others developed by hybridization, some of which show great promise. The cowpea is to the South what clover is to the North, and the lessening of the cost of the seed and the improvement of varieties are the two important problems that need to be thoroughly pushed.

EXTENSION OF SORGHUM CULTURE.—The various varieties of sorghum have been receiving special attention with a view to their utilization, especially in the South, where the rainfall is more or less

deficient. A large amount of seed of improved and pure-bred strains will be available for distribution in 1908. Among the numerous new introductions that are of great promise are two from Natal, one a black-hulled Kafir, having large elongated heads, the other a new type called Pink Kafir, characterized by rather large pink seeds and dense heads. A new sweet sorghum of unknown origin was discovered under cultivation in a single locality in Texas. It is the sweetest variety yet tested and will be disseminated under the name of Honey Sorgo. All these sorghums are proving valuable not only for forage but for grain throughout the Southwest, and their wider introduction is of considerable importance.

SOY BEANS FOR ROTATION ON RICE LANDS.—The rice growers of the South, especially in Louisiana and Texas, have long felt the need of a legume that might be grown in rotation on their rice lands. The Department has been successful in introducing a specially adapted variety of soy bean used on the rice lands of central China. These soy beans have been tested and give every promise of filling the need perfectly. Three varieties have been secured, all very similar and characterized by great leafiness, fine stems, and large size, becoming 6 feet high, so that they produce large crops of excellent hay. Thus we have a combination of crops which will, we hope, do for the rice grower what clover does for the wheat fields of the North, serving not only as a valuable soil improver but an important forage crop as well.

DISCOVERY OF AN EARLY-MATURING VETCH.—Other important investigations with forage crops have had to do with the introduction and encouragement of the growing of vetches throughout the South. The vetch is an exceedingly important plant and its much wider use is greatly to be desired. The principal difficulty in securing an extended use of these important plants has been the fact that they can not be harvested in time for cotton planting. The recent discovery of a valuable new vetch which matures as early as the so-called native vetch of the South and which produces very satisfactory crops will, it is believed, obviate this difficulty and result in its extensive employment. Seed will be available for distribution and trial next season.

IMPROVING THE CORN, COTTON, TOBACCO, AND OTHER CROPS.

The special work of the Bureau in the improvement of plants by breeding and selection has been pushed forward during the year with vigor.

BREEDING BETTER STRAINS OF CORN.—Extensive cooperative investigations have been carried on in the matter of corn improvement. Breeding for greater yields, improvement in forage, improvement in

sweet corn, and other lines of work have been carried on in cooperation with several experiment stations and with a great many individual farmers throughout the country. Demonstration plots of corn in considerable areas have proved the most successful way of interesting the farmers in this important work. These farmers after a time supply greatly improved seed, thus advancing the work throughout an entire neighborhood.

METHOD OF SEPARATING COTTON SEED.—In the cotton improvement work the introduction of practical methods of seed selection has enabled the cotton growers to get rid of light, inferior seed, and as the result of this work, which has aroused great interest, the yield has been increased from 10 to 15 per cent. The apparatus devised for the purpose of separating the seed has been improved so that it is possible to separate cotton seed into heavy and light seed at a very small cost.

BREEDING COTTONS TO ESCAPE WEEVIL INJURY.—Improved and early varieties of cotton are being secured for growing in the boll-weevil districts. Seed of these varieties will be extensively distributed the coming season to the growers for testing purposes. The work of breeding improved varieties of cotton adapted to different conditions in various parts of the South has been continued and further work along this line inaugurated. Extensive selection of the best plants in the cotton fields has been made. Many new hybrids and various crosses have been tested and some promising results obtained. The principles worked out at the Texas Agricultural Experiment Station, in cooperation with this Department, for the purpose of securing cottons of early maturity, were briefly described in my last report. These principles were applied this year by a large number of farmers, with the result of great increases in productiveness for the selected sorts as compared with the unselected. This work has been carried on in the heart of the boll-weevil region, and, we believe, is so far advanced now that it may be discontinued, as the farmers themselves can well continue it. The results, in brief, mean that every farmer has it within his power to breed productive strains which will so mature their cotton as to give yields exceeding those of old varieties and at the same time in such a way that the injury from the boll weevil will be largely minimized.

INSURING A STAND OF EARLY PLANTED COTTON.—In connection with this work some important investigations have been conducted with the object of insuring a stand of early planted cotton. One of the greatest difficulties in early planting is rotting of the seed or the death of the young plant as a result of unfavorable weather conditions and methods of planting. The ordinary depth of planting ranges from 1 to 2 inches, usually upon a soft seed bed. The result of planting at this depth, and the condition of the seed bed under

unfavorable weather conditions, is that the seed rots or the plant is exhausted before it gets through the ground. It has been demonstrated the past year that very shallow planting upon a firm seed bed that is so shallow as to scarcely cover the seed produces plants that make a good strong root, that do not exhaust their energies in getting through the ground, and that are less subject to damping-off and will make a good stand of cotton, even though the weather conditions are extremely unfavorable. The result of this work is believed to be of fully as great importance as the use of early maturing varieties in securing a profitable early crop. The principal shortage in the cotton crop in some localities this year is due more to the failure to get a stand of the early planted cotton than to any other cause. Demonstration work has proved conclusively that good stands could be obtained by shallow planting methods, despite unfavorable weather conditions.

Acclimatization of Egyptian cottons.—Numerous attempts have been made to grow Egyptian cottons in this country. During the year gratifying progress has been made in this work, Egyptian cotton of the Mit Afifi variety having been grown quite successfully under irrigation at Yuma, Ariz. One selection has yielded at the rate of 500 pounds of lint per acre, which is unusually high for Egyptian cotton in this country. Some of the improved Upland strains have also given equal and even superior yields in this region. The Upland varieties that seem at present most promising for this important agricultural section of the Southwest are the Southern Hope, Sunflower, and Columbia, the latter being a variety improved by the Department in South Carolina.

Breeding improved tobaccos.—All tobacco work of the Department was, in accordance with the action of Congress, taken up by the Bureau of Plant Industry the first of last July. One of the most important results of the past season's investigations has been the introduction of the new varieties of tobacco which the Department has originated. The Brewer and the Cooley tobaccos have given increased yields of a better grade of cigar-wrapper tobacco than the unimproved varieties, and in those sections where they have been tested many of the large and successful growers are planning to use these varieties exclusively next season as the result of the favorable experience of the past year. The new and improved types of Sumatra varieties of cigar-wrapper tobacco are being adopted by growers in Florida and the Connecticut Valley for growing under shade.

They rank among the best varieties of cigar-wrapper tobacco now grown. Other new varieties are being tested in the various sections of the tobacco-growing States, some of which have been found to be valuable. A nematode-resistant type of cigar-wrapper tobacco has

been produced in Florida. In view of the great annual loss sustained by southern tobacco growers from this injury, the production of a resistant variety is of the greatest importance to the growers. Considerable quantities of seed of the various new varieties of tobacco will be distributed to interested growers this winter for use next season. The demand for such seed in sections where the tobaccos are grown is already beyond the quantities available for distribution. However, sufficient seed has been saved to give to the growers a limited supply, consistent with the introduction of new and improved varieties.

IMPROVEMENTS IN HANDLING THE TOBACCO CROP.—Improved practical methods of seed selection and seed separation for tobacco have been discovered by experiments and are proving to be of benefit and practical value to all tobacco growers. At the various experimental fields where the tobacco work of the Department is being carried on thousands of farmers have visited the places and have secured from observation the benefit derived from this work. Improved methods of preventing damage from pole burn in the curing sheds have been devised as a result of experiments carried on in different parts of the country the past season. Extensive laboratory work has also been carried on in the matter of the nicotine content of tobacco. The demonstration work in various parts of the regions where the different tobacco types are grown has been continued, with encouraging results.

BREEDING DISEASE-RESISTANT ASPARAGUS AND OTHER CROPS.—Aside from the foregoing a number of general problems in breeding have been under investigation. The question of securing rust-resistant varieties of asparagus has been given special attention during the year. The rust disease of asparagus is threatening this industry in a number of sections and the efforts being made are for the purpose of securing types which will be resistant or immune to the disease. The Bureau of Plant Industry is cooperating with the Massachusetts Experiment Station in these investigations.

Work in the breeding of wilt-resistant melons was practically completed during the year. The new wilt-resistant hybrid melon, to which attention was called in my last report, was grown on a commercial scale during the past season and easily held its own in the market with the varieties of its class. It produced an excellent crop on land where ordinary melons were destroyed by wilt. In connection with the breeding of wilt-resistant cotton further tests have been carried on with Upland cottons. Some of these Upland wilt-resistant types have not only proved valuable from the character of their lint but also from the quantity of fiber produced. Considerable work has also been carried on in the matter of breeding alkali-resistant and drought-resistant plants. This work has included such crops as cereals, forage crops, grasses, and sugar beets.

WORK IN THE IMPROVEMENT AND EXTENSION OF GRAIN CROPS.

This important line of investigation has been continued in much the same way as touched upon in my previous reports.

DURUM WHEAT.—Efforts to still further extend the durum wheats have continued. The successful production and utilization of this wheat continue, notwithstanding the numerous unfavorable comments and predictions made in reference to it since its introduction seven years ago. Twenty million bushels of last year's crop were exported to Europe. Of the remainder all except a seed reserve went rapidly into domestic consumption, chiefly for bread flour. It is certain, from official figures, that over 6 million bushels were ground in Minneapolis mills. Probably 10 million bushels were used in the country mills of the Northwest. In Minneapolis a large portion of this wheat was blended with Hard Spring, although a considerable amount of straight semolina was made for macaroni factories. In the country mills a considerable quantity of pure durum wheat flour was made.

The 1907 crop of durum wheat in the Northwest is probably about the same as that of last year. It is difficult to follow its extension everywhere. The acreage in the Middle West and Southwest is now, however, becoming important, and the production in those areas this year is probably about 5 million bushels. There is now also a considerable acreage in Montana, Idaho, Oregon, and Washington. Of this new crop over 8 million bushels have been exported to November 1. An important feature of recent shipments is that large amounts are going to northern Europe for bread flour. One-fourth of the entire export is being used in Great Britain. Recently durum wheat was preferred in Antwerp over No. 2 Red Winter, the latter selling at 2 or 3 cents less per bushel. A dozen or more cars per day are at this time being received in Chicago, all of which is sold to domestic mills.

Statements recently made that durum wheat is deteriorating are found, after investigation, to be incorrect. Samples from certain localities, particularly in the Red River Valley, where it should not be grown, have a large proportion of white, soft grains, but the larger part of the present crop is of good quality.

EXTENDING THE WINTER-GRAIN AREA.—The Bureau has made a special effort during the year in the continuation of the work of extending the winter-grain area in the Middle West and the North Central States. Grain-growing conditions in these sections have been greatly improved through the introduction by this Department of winter hardy varieties adapted for autumn seeding, the testing and distribution being accomplished in cooperation with the State experiment stations. Tennessee winter barley is now fairly well known throughout Kansas, and is giving from 30 to 50 per cent better yields than spring

barley every year. The use of Kharkof wheat has virtually established winter-wheat production over considerable portions of Nebraska, Iowa, and South Dakota.

INTRODUCTION OF EMMER.—Emmer, the grain about which the Department has already published some information, is being more and more recognized as a good stock food and is found well adapted to the dry-land areas. More recently the Department has successfully established a winter hardy variety, which, in addition to the qualities of the ordinary spring-sown emmer, furnishes good fall pasturage.

MISCELLANEOUS GRAIN PROBLEMS.—As agriculture gradually extends into our western sections demands come for information relative to grains suitable for high altitudes. In response to these demands experiments with hardy varieties have been inaugurated at several points of high elevation. Tests of the most promising sorts have also been made under field conditions in cooperation with farmers. Hull-less barley, early oats, emmer, durum wheat, and spring rye are found to be particularly suitable for these districts. The important work on the study of grain diseases, investigations of rice and rice varieties in the South, and the improvement of grains have been continued.

SOIL BACTERIOLOGY.

The work in soil bacteriology has been extended during the past year to include the whole question of the relation of bacteria found in soils to fertility and crop production. Outside of the work of the Department and two of our experiment stations, very little has been done in this country on this general subject.

RELATION OF BACTERIA TO FERTILITY.—Though this work has not gone far enough yet to warrant any general statement of results, it has been shown that the failure of nodule bacteria in certain soils is due to the presence in the soils of certain bacteria antagonistic to the nodule form, and that if these antagonistic forms can be removed leguminous crops can be grown and successfully inoculated on these soils. In other cases it has been found that certain soils otherwise in good condition lack effective nitrifying and ammonifying organisms, these soils being improved in fertility when these organisms were supplied.

DISTRIBUTION OF INOCULATING BACTERIA.—The distribution of bacteria for inoculating various legumes has been continued during the past year with increasing success. It has been found especially important to carefully examine soil conditions before inoculation, and a method of doing this quickly in the laboratory has been devised, based on the soil-solution work of the Bureau of Soils. Over 18,000 cultures have been distributed during the year, and, from the reports received to date, they have been used with success in the majority of cases.

STUDIES OF WATER CONTAMINATION.

In the water purification work principal attention has been given during the past year to the study of the conditions of water supplies, especially on dairy farms.

IMPROVEMENT OF FARM WATER SUPPLIES.—The results of the work showed that the water supplies on a large percentage of dairy farms, especially in the vicinity of Washington, D. C., were in very poor condition, and as the work has extended it has been found that the condition is apparently as bad in other localities. This line of work is especially important, not only to dairy farms but to farms in general, and the Bureau of Plant Industry, cooperating with the Bureau of Animal Industry and the Public Health and Marine-Hospital Service, will do everything possible to improve these conditions.

WORK IN THE CANAL ZONE.—A great deal has been done also in the treatment of reservoirs for algal pollution. Probably the most striking treatment was that carried out under the direction of the Department experts in the Panama Canal Zone, the work there being highly successful and satisfactory to the canal authorities.

FRUIT INVESTIGATIONS.

Investigations of the marketing, transportation, and storage of fruits have been continued along the lines mentioned in my last report. The grape work and fruit district investigations have also been continued.

METHODS OF MARKETING APPLES.—Particular attention has been given to methods of packing and handling winter apples. Investigation of foreign shipments of these apples indicates that more than 20 per cent of such shipments are classed as "slack," caused by insufficient shaking of the barrels in packing, insufficient filling of the barrels, over-ripeness at harvest, and careless and rough handling.

IMPROVEMENT IN HANDLING AND SHIPPING ORANGES.—Investigations of the causes of decay in oranges from California were continued. Practical demonstrations and trial shipments have shown the results of different methods of packing, handling, and shipping upon the keeping quality of the oranges. This work continues to have the support of all those interested in the citrus fruit industry, and the methods of handling the crop are being changed in many respects. Reliable authorities have estimated that the improvements already effected have resulted in an annual saving to the industry of from one-half million to one million dollars. Preliminary investigations have been begun to determine the causes of losses in Florida oranges, and it has been demonstrated, as in California, that the rough mechanical handling of the fruit is one of the principal causes of the trouble.

PROGRESS IN GRAPE INVESTIGATIONS.—In connection with the grape investigations, additional resistant varieties have been planted at each of the cooperative vineyards in California, and the work is progressing satisfactorily.

SUGAR-BEET INVESTIGATIONS.

During the year investigations of sugar-beet growing have been continued along lines similar to those discussed in previous reports.

PRODUCTION OF AMERICAN-GROWN BEET SEED.—The development and improvement of American strains of sugar-beet seeds have been continued. This work is carried on in a number of States and the results have already been very encouraging. Large quantities of American-grown seed have been distributed to farmers, and cooperative experiments were inaugurated whereby it was made practicable to test the seed grown in this country alongside of the best European seed. In all cases the American seed has been found equal to and, in a number of instances, superior to the foreign-grown product.

RESULTS OF THE YEAR'S WORK.—The special investigations pointed out in previous reports in the matter of breeding beets of high sugar content have been carried on mainly in the State of Washington. The studies on the development of single-germ beet seed have also been continued with encouraging results as to progress. We now have these beets giving progeny of high sugar content and yielding 50 per cent of seed of single germs. During the year a number of diseases of the sugar beet have been investigated and further work has been carried on in the matter of testing fertilizers for the purpose of increasing the tonnage. Some investigations have also been inaugurated in the matter of handling the beets, rotation of crops, and other subjects of a similar nature.

From the latest information it would appear that the sugar production of the country for the year just closing will amount to approximately 500,000 short tons. Our representative reports that crop results throughout the sugar belt are checking out very closely those of last season. There will be three or four more factories in operation than last year. Two or three factories new last year will work a larger tonnage this season. The tonnage of sugar will in all probability approximate from 20,000 to 30,000 more this year than last. The crop in Colorado is from all appearances a little heavier than that of last year. In California it is a little lighter. In Wisconsin and Michigan the crop is fairly good and about the same as that of last season. Colorado will come close to 200,000 tons of sugar. Altogether the industry is in a prosperous state.

STUDIES OF POISONOUS PLANTS.

Investigations of plants poisonous to stock have been continued during the year with encouraging results. The causes of a number of serious outbreaks of stock poisoning have been investigated and remedies prescribed. Some important results have been obtained during the year in the matter of loco poisoning, its cause and remedies.

COOPERATION WITH THE FOREST SERVICE.—In connection with the work of the Forest Service important questions have arisen regarding injury to stock through the eating of poisonous plants. The Bureau of Plant Industry has entered into cooperation with the Forest Service, whereby examinations of this nature will be made with a view to taking steps for the prevention of losses in the future.

THE GROWING OF DRUG CROPS AS A NEW INDUSTRY.

It has been pointed out in previous reports that from 10 to 15 million dollars are sent abroad each year for the purchase of drug crops, many of which could be grown here. With a view to determining the conditions of soil and climate where these drug crops will grow to the best advantage, experimental work has been under way for some time.

ESTABLISHMENT OF THE CAMPHOR INDUSTRY.—Drug gardens are now established at a number of points, and as a result of this work it is believed that the camphor industry has been established on a firm basis. A large acreage is being planted to camphor in Florida, and interest in the growing of this crop is shown elsewhere. From 3,000 to 4,000 acres of the trees are being prepared for planting in Florida alone.

PROGRESS IN SEED STUDIES.

The Department is making a special effort to educate the farmer in the matter of good seeds. With this end in view many thousands of tests have been made during the year, both for seedsmen and for farmers.

DECREASE IN PRACTICE OF SEED ADULTERATION.—The work on seed adulteration has been continued with gratifying results. Aside from the continued sale of Canada bluegrass seed for Kentucky bluegrass seed, fewer cases of adulteration have been found than in former years. The importation of low-grade red-clover seed has continued, some lots containing over 8,000,000 weed seeds per bushel.

INVESTIGATION OF DODDER INJURY.—During the year special attention has been given to the loss caused by dodder infesting clover and

alfalfa. Dodder has proved such a serious pest the past year throughout the world that the International Seed Control Congress at Hamburg, in September, 1906, took action toward encouraging all governments represented to adopt measures for the extermination of this pest.

CONGRESSIONAL SEED DISTRIBUTION.

The work of securing, packeting, assembling, and mailing the seed for Congressional purposes was carried on the same as in past years. This work is now so systematized that it goes along smoothly, despite the large quantities of seed that must be secured and sent out. The total number of packages put up and distributed has remained the same for the past six years. In the annual distribution 6,400,000 packages of miscellaneous vegetable seed are put up and sent out, each package containing 5 packets, and 800,000 packages of flower seed are put up and distributed in the same way, each package containing 5 packets.

EXPERIMENTAL GARDENS AND GROUNDS AND ARLINGTON FARM.

The Department grounds have been further improved during the year by the addition of a large number of new shrubs and trees and by repairs to the greenhouses and fences. A new greenhouse has been constructed during the year, which is a model of its kind. Over 90,000 plants of many varieties were propagated and distributed, and the important hybridization work which the Bureau is carrying on was continued with satisfactory results.

WORK OF THE ARLINGTON FARM.—Many problems of a general nature connected with crop growth and crop conditions are being worked out at the Arlington Experimental Farm. The Forest Service, the Bureau of Entomology, and the Bureau of Soils have each been allotted certain areas for working out problems pertaining to their respective investigations. The greater portion of the farm, however, is used for the various lines of work conducted by the Bureau of Plant Industry. The drug garden has been successfully established, the peach orchard has now begun to bear, a small cranberry bog has been established, and extensive tests with beets and radishes have been conducted at the testing gardens. The condition of the soil on the farm has been greatly improved during the year. Two additional greenhouses have been constructed and other improvements have been made.

HELPING THE FARMERS IN THE BOLL-WEEVIL REGION.

The Bureau of Plant Industry has been engaged for the last three or four years in encouraging the diversification of crops, the improvement of systems of farm management, and the handling of farms in

the sections invaded by the boll weevil and those in which it would seem that the boll weevil is likely soon to appear. This general propaganda work has been under the supervision of a representative of the Department, with headquarters at Lake Charles, La., and has met with great and continued success. The object of the work is simply to bring to the attention of the farmer plain and practical methods of bettering his condition, improving his soil, and growing larger crops. Diversification is taught as far as it can be taught under existing circumstances. The people are reached largely by personal contact with representatives of the Department. Close touch is kept with all those who are working in order to determine definitely the difference in actual money returns from farms or portions of farms handled by the old methods and on the newer plans. During the past year the Department cooperated in this way directly and indirectly with more than 100,000 farmers in the more important cotton States.

GRAIN STANDARDIZATION.

Attention was called in my last report to the unsatisfactory methods of handling and grading grain now in vogue. The laboratories established at Baltimore and New Orleans have continued to receive the cordial cooperation of all interested in the handling of grain and have determined some of the more important factors entering into the question of standardizing present methods and grades.

DEVELOPMENT OF MOISTURE-TESTING APPARATUS.—The moisture-testing apparatus introduced last year by the Department has been used with great success in these laboratories. This apparatus has been adopted by many commercial organizations, and they report that it has been of the greatest value to them in determining the moisture content of grain. This apparatus enables us to determine the moisture quickly and accurately, making it entirely practicable for use under commercial conditions.

ESTABLISHMENT OF NEW LABORATORIES.—Additional laboratories have been established at Duluth, Minneapolis, St. Louis, and New York. At Duluth and Minneapolis special attention is to be given to finding the best method of accurately determining and measuring dockage. Through the work of these laboratories and the general investigation of grain-trade conditions the Department is coming into possession of much valuable information which should enable it to be of great assistance in straightening out the unsatisfactory conditions now existing.

NEED OF UNIFORMITY IN INSPECTING AND GRADING GRAIN.—It becomes more and more evident as this work progresses that some uniform system of inspecting and grading grain is absolutely imperative. Our producers of grain suffer through the lack of uniformity

in grading, and our markets abroad are injured by lack of confidence in the grades established. It is believed that the end to be attained is through National inspection of all grain entering into interstate and foreign commerce, and the attention of Congress is respectfully called to this important question.

FARM MANAGEMENT.

Farm management investigations have been continued during the year along the lines set forth in previous reports. For the purpose of systematizing the work the country is divided into sections and the systems of successful farm management in these sections is being studied by experienced men.

CROPPING SYSTEMS FOR STOCK FARMS.—From data which have been thus secured the Bureau has been enabled to outline and plan cropping systems to meet the needs of those desiring specific information along these lines. During the year a simple method of planning cropping systems for stock farms has been developed and such systems have been worked out and applied to a number of farms in various parts of the country.

ENCOURAGEMENT OF DIVERSIFICATION OF CROPS.—In many sections of the country it is found that systems of farming have been developed based on a single crop. Frequently this crop is grown year after year on the same land and forms the sole basis of the farmer's income. Such systems are found in some of the wheat-growing areas of the Plains region and the Far West. In these sections the land is becoming infested with many bad weeds. In some parts of the corn belt corn has been grown continuously for sale until the land has become depleted and insect pests are gradually reducing the yield of corn. In the Southern States the continuous clean cultivation of cotton has destroyed the humus of the soil and yields are unsatisfactory. In all these instances the Department of Agriculture is working out systems of diversified farming which provide for the maintenance of fertility and render the farmer less dependent on the single source of income.

STUDIES OF METHODS ON SUCCESSFUL FARMS.—Realizing that preeminently successful farms have solved many of the most important problems confronting farmers in this country, experts in farm management in this Department have continued the study of such farms with valuable results. The success which a few men have attained in farming has in no case been due simply to good judgment in buying and selling. In every case thus far studied success has been due not only to good business methods, but to the application of the teachings of science in crop production and in the care and management of stock. Farmers of this class are invariably well

informed concerning scientific investigations relating to farming. During the year careful studies of several successful farms have been completed and the results have either been published by this Department or are now in course of preparation for publication.

VALUE OF THE PRICKLY PEAR AS STOCK FEED.—As a special investigation the Office of Farm Management has made a study of the prickly pear as a farm crop during the year. Conservative estimates based upon actual feeding tests and upon yields obtained from cultivated fields show that 1 acre of cultivated pear will furnish roughage for one cow the year round. An average production of nearly 23 tons of green feed per acre per annum has been grown upon the experimental grounds near San Antonio, Tex., during the past three years. The native growth has been used as stock feed for many years, but its cultivation was never attempted until three years ago. The response to cultivation has been remarkable, eight times as much forage being produced upon cultivated ground as upon uncultivated ground. When it is considered that the crop economizes labor, that a plantation is good indefinitely when once established, that it can be fed in a succulent condition every day of the year, that it is relished by nearly all farm stock, and that it is extremely resistant to drought, it is clear that this crop must become an important adjunct to the live-stock industry of the Southwest.

FOREST SERVICE.

RETURNS FROM THE NATIONAL FORESTS.

At the beginning of the fiscal year the area of the National Forests was less than 107,000,000 acres; at its close, more than 150,000,000 acres. Nearly all the timber land of the unappropriated public domain is now under actual administration by the Forest Service. This means that it is being protected against fire, theft, and wasteful exploitation, that its power to grow wood and store water is being safeguarded for all time, and that nevertheless its present supply of useful material is open to immediate use wherever it is wanted. The timber in the National Forests, which is the legacy of the growth of centuries, is now in the truest sense public property, administered for the benefit of the people—primarily for the benefit of the people of the West, since they are nearest at hand, but on the whole for the benefit of every part of the country, since the welfare of every section is interwoven with that of all others. The communities and settlers adjacent to these forests are safe from any fear of monopoly of one of the chief necessities of civilized man.

The Government is not a landlord owner, but a trustee. As a trustee it must treat all alike and refuse permission to the first comer to pocket the share of all the rest. Hence timber is given away

through free-use permits only in small quantities to the actual home maker, who comes to develop the country, and in larger quantities to communities for public purposes. Otherwise it is sold to the highest bidder, but under such restrictions as look to the maintenance of a lasting supply answering to the needs of the locality, to be had without favoritism and without extortionate demand based upon the necessity of the consumer.

Though the value of the forests as public property is not measured by what they turn into the Treasury of the Government, but by what they contribute to the welfare of the people in the States in which they lie, it is none the less a matter of striking importance that the receipts from them during the year totaled over $1,530,000, or almost exactly twice those of the previous year, and more than twenty times those of two years ago. The cost of their administration to the Government, including that part of the expenditures of the Forest Service in Washington properly chargeable under this head, were less than $1,500,000. In other words, the forests are already self-supporting, though they have been under the control of expert foresters less than three years. The total expenditures of the Forest Service for all purposes during the year was $1,825,319.50—considerably less than I estimate that the receipts from the Forests will be during the present year. As yet, however, from the standpoint of true economy the expenditure for the protection and improvement of these Forests is far too low. France spends annually upon state forests less than one-fiftieth the area of our own over $2,500,000 and realizes $4,230,000; Prussia spends upon 7,000,000 acres over $11,000,000 and realizes $17,054,144; Saxony spends upon only 400,000 acres over $900,000 and realizes $1,651,882. Yet in all these countries, unlike our own, the forests have had great sums spent upon them in the past in the form of permanent improvements, to which are largely due their present returns. A forest can no more be made to yield a constant return in valuable products without the investment of capital in improving the property than can a farm. If the United States spent as much per acre upon these forests as Prussia does upon hers, they would cost each year $250,000,000. If they brought in as much per acre, the gross revenue which they would yield would amount to $650,000,000, and the net revenue to $400,000,000. The development of the wealth-producing possibilities of the National Forests—not, it must be insisted, in the narrow sense of income yield to the National Treasury, but in that of economic usefulness to the people—is hardly begun.

I have asked for an appropriation for the Forest Service during the fiscal year 1909 of $3,200,000. This, if all spent upon the National Forests, would amount to 2 cents per acre. France spends annually

upon her state forests 95 cents per acre, Switzerland $1.32, Prussia $1.58, and Saxony $2.32. These are the countries in which the management of the forests is most profitable in products. The countries which spend most do so because their forests are brought to a high state of development. Thus utilizing their full productive powers, they derive from them a net profit which is very high. On the other hand, the countries like Sweden, Hungary, and India, which spend from 2 to 34 cents per acre, derive a very low revenue—in other words, a small volume of products—from their forests.

NATIONAL FORESTS NOT EXPERIMENTS.

It is worth remembering in this connection that these Forests have not been set aside, and the proposed expenditures are not to be made, in order to try a doubtful experiment. It is true that the practice of forestry has only lately begun to be applied to American conditions, but this is far from meaning that it is something new, untested, or of uncertain issue. It is as sure that forest land can be made to grow successive crops of trees under proper methods as that plow land can be made to grow successive crops of wheat; as sure that forests can be made to conserve the water supply as it is that manuring enriches the soil. As time passes, it will doubtless appear that the principles which centuries of experience in older countries have placed at our command can be applied with increasingly good results as we grow more familiar with our own special conditions; it may be that mistakes will be made in individual cases; but of broad success there can be no question. The issue is sharply between caring for our forests by applying a system of known efficiency, or suffering certain loss not only of the forests, but of usable water and soil as well, through the operation of causes as certain to act as are the rivers to run to the sea.

THE GAIN IN THE USE OF THE FORESTS.

The use of the National Forests by the people of the West is increasing at an extraordinary rate. The value of timber sales, the number of stock grazed, the demand for free-use and special-use permits all tell the same story. The Forests are more and more contributing to the material welfare of those in their vicinity. This is altogether as it should be. But it is out of the question to transact twice as much business and protect a much larger area of Forests without a corresponding increase in the administrative and protective force. The demands imposed by the enlarging use of the Forests diminished to a very dangerous degree the attention that could be given to the work of patrol. The force upon National Forests must be increased as the business of these Forests increases.

SOME IMMEDIATE PROBLEMS.

Notwithstanding the fact that forestry is a thoroughly tested system by which other nations have met and solved the same difficulties which now confront us, the Forest Service has many novel problems to work out. For its task is not merely to save the Forests through use, but also to find out how to make the most of them. Scattered as they are throughout the West from Alaska to Arkansas and from Minnesota to California, they grow under climatic conditions that vary from almost subarctic cold to almost tropical heat, and from the heaviest rainfall of the continent to the extreme of aridity which tree growth can endure. Just as American farming has had to develop and is still developing methods adapted to the conditions of each region to make the best use of agricultural land, so must the forester learn by scientific study and practical trial to make the best use of our timber land. And the best use means, of course, not merely its best use for the growing of trees, but its best use with reference to all interests directly or indirectly affected by it.

Through records of the effects of all cuttings made, knowledge is being gathered which will make it possible constantly to improve upon the methods employed in harvesting the timber crop and replacing it by another. Two other problems under investigation which are of special importance are range improvement and forest extension.

Unlike the demand for timber, the demand for range in the National Forests is already large enough to employ practically the full productive capacity of the land. There were grazed last year on the Forests over 1,200,000 horses and cattle and 6,650,000 sheep and goats, representing a total investment of perhaps $44,000,000 and a probable annual profit, under the conditions of recent years, of $8,000,000. Upon the cattle industry of the western range depends to a large extent the farmer of the prairie States for the profitable marketing of his corn crop, the workingman of the East for his food supply, and our foreign trade for one of its important articles of export. The entire country, with its rapidly growing population, is therefore concerned in the power of the range to supply summer feed to the stockman. Under the conditions which obtained before the Forest Service undertook to regulate grazing, the carrying power of the range had seriously fallen off through overgrazing and competition. By putting a stop to these evils the Forest Service has not only partially restored the range to its former carrying power, but has also given greater stability to the stockman's industry by recognizing his right to protection against newcomers, and made it possible for him to bring his stock through in better weight and condition. Nor is this all. An exhaustive study of the possibility of range improvement through artificial seeding, through changes in the present methods of handling stock to favor the growth of the best native forage

plants, and through extermination of poisonous plants has been inaugurated. The whole problem of range control and improvement will be pursued until every part of the range in National Forests is producing the best crops of forage which the circumstances will allow.

Forest extension opens a field the importance of which can hardly be overestimated. The fires of past years and centuries have stripped great areas of western mountain timber land of all forest growth. The need of conserving the rainfall and snowfall of these areas makes reforesting a step of urgent necessity. At the same time it is often one of the utmost difficulty. In dry climates particularly (where the need is greatest), to establish a forest without prohibitive expense calls for the most careful study of methods and of the adaptability of different species to the conditions. Even after plantations are apparently well established a season of unusual drought may turn the scale against the growing trees. Millions of acres must be planted—and this means that thousands of millions of small trees must be raised—but there is yet much to be done before planting on a scale commensurate with the needs can be begun. This preliminary work is being pushed with as much energy as the funds available for the work will permit.

In a large part of the Northwest, at least, there is good reason to believe that broadcast sowing of seed may be practicable. If this proves to be the case, the way will be open for restoring to forest cheaply very much of the burned-over land. Hitherto the experimental sowings have shown surprisingly good results. The country's need of timber is certain to be so acute before many years that the work can not be entered upon too quickly. Broadcast sowing, however, to give good results, must probably be confined to heavy seed years, when a food supply for the animal life of the forests is abundant enough to prevent too great interference with the sowings.

NEED OF A CENSUS OF STANDING TIMBER.

That the United States is even now nearing a time of severe scarcity of lumber is no longer a matter of doubt. Each year makes a further heavy inroad upon the remnant of our virgin forests, and the growth of our abused and depleted forest lands for three years would not meet our needs for one. Under these grave conditions it becomes a matter of very practical and exigent importance to know with some degree of accuracy how much standing timber we have. Many commercial organizations have, during the last few months, passed resolutions asking the Government to undertake a census of our sources of supply. The Bureau of the Census and the Forest Service are ready to act together to take such a census, if this is made possible by action of Congress, and I urge most strongly that the appropriation necessary for this purpose be made. Until it is known not only how fast our

forests are being used, but also how much is in reserve and how fast new wood is growing, our measures to meet the crisis will be planned in ignorance of some of the essential facts.

WORK OF THE YEAR.

ADMINISTRATION.

The business efficiency of the Forest Service organization was put to an extraordinary test by the work of the year. Great credit is due the members of its administrative force for the energy, patience, and good sense with which they assumed greatly increased responsibilities and discharged trying duties. The increased volume of National Forest business imposed a severe strain upon the machinery of organization and the personnel. Special mention should be made of the work of the forest rangers, the rank and file, who form, so to speak, the firing line of the Service. Their pay is low—too low for the requirements placed upon them—their responsibility great, and their life one which makes necessary self-reliance, initiative, and good judgment. The conspicuous success which the Forest Service has achieved in making the Forests useful to the people of the West is due in no small measure to the fidelity of these true public servants, performed as a part of the day's work and without thought of other reward than their own consciousness of duty well discharged. I am glad to acknowledge the indebtedness of the Department to these men.

A noteworthy gain in efficiency of organization for the handling of National Forest business was secured along two exceedingly important lines—closer harmony between the Washington office and the field force and enlarged local responsibility for the supervisors. By the one the two parts of the Service have been drawn into closer touch with each other; by the other the Service has been brought into closer touch with the public. The first was effected by bringing supervisors into the work of the central office in rotation, usually for two or three months, to take charge of the Washington end of forest business. The second involved a substantial increase of the authority of supervisors. Supervisors are not machines for receiving instructions and carrying out the orders of a bureaucratic organization which decides important questions far from the scene and without regard for local conditions, but men in real charge of the business and technical management of their Forests. They are held to rigid accountability for results, through systematic and searching inspection. Those who prove incapable of rising to the responsibility laid upon them are displaced. On the whole the ability shown by these forest officers has been a striking illustration of a characteristic American trait—the power to accept responsibility and rise to the situation as new duties and opportunities open.

IMPROVEMENT WORK ON NATIONAL FORESTS.

The special fund of $500,000 appropriated by Congress for permanent improvements on the National Forests is being well spent. Before this fund was made available the Forest Service was compelled to draw upon the sums at its disposal for the payment of current expenses, to provide whatever was spent in betterment of the Forests. Such expenditures were virtually reinvestments of a part of the income yielded by the Forests. Rangers' quarters, fences, fire lines, bridges, roads, trails, and telephone lines facilitate the transaction of business, the use of the Forests, the convenience of the public, and the protection and development of the property. The Forests were not created to be kept as wildernesses. They must be opened both to use and to habitation. In time they will increasingly be places for homes, industries, villages, and towns. The more they are made traversable and habitable the greater will be the development of their wealth-producing power. This work of development is as yet hardly well begun, for the size and capital value of the forests open a field of vast possibilities. That improvements do actually bring increased use the results of those already made leave no doubt. Provision should be immediately made for carrying on this work.

GRAZING.

Two years of trial have amply demonstrated the wisdom of the present method of range control. Since it is an essential part of that method that where the grazing privilege is sought for more stock than can be safely admitted some must be shut out, there is necessarily a certain amount of dissatisfaction among those to whom permits for a part or all of their stock are refused. Such dissatisfaction can not be allowed to weigh against what is manifestly the best interest of the community and the grazing industry itself. The only alternative, other than the old and ruinous one of permitting the range to be scrambled for by all alike, would be to grant the privilege to those willing to pay most for it. This would be a grave mistake. It is not in the public interest that the small owner who has established a home near the Forest should be crowded out by the big man, nor that those who have identified themselves with a locality should have to give way before the transient herd. The Forests serve their best purpose by promoting settlement and development. The evils of former conditions, with their rivalries, their injustices, and their wastefulness through overcrowding, are fresh in the minds of all. The purely selfish outcry of those who think themselves strong enough to look out for their own interests, and therefore object to a system which begins by asking who has the best right, is to be expected and must be disregarded.

That the system works well for the stock is attested by the excellent weight and condition which has been attained on the Forest range. No longer hustled from one place to another in hasty competition for feed, they are now brought to the end of the summer in better flesh and with fewer losses than formerly. In short, regulation of the grazing is proving beneficial to the range, to the owner of stock, and to the community. It is turning forage into money to better advantage than could be secured under any other system. Through the recognition given to associations of stockmen those who use the range have a voice in its management, while control by the Government prevents favoritism and insures even-handed justice to all.

The number of stock-grazing permits issued during the year approached 24,000, as against less than 17,000 the previous year, and the receipts were over $850,000, as against $515,000. This increase was mainly the result of additions to the number and area of Forests under administration, but to some extent also the result of improved range condition brought about by grazing control. No charge was made for grazing upon Forests proclaimed after March 1. Another year will beyond a doubt show further increase. The growing volume of business is another illustration of the greater use of the Forests. To handle it has severely taxed the present field force. The greater the number of stock on the Forests the heavier are the demands laid upon the rangers, one of whose duties it is to enforce the grazing regulations. A substantial increase in the administrative force of the Forests will be needed to handle the grazing business of another season.

Of 183 cases of grazing trespass, 165 were settled by the payment of damages. Action for criminal trespass was brought against five trespassers. The constitutionality of punishment for criminal trespass still awaits final determination through decision by the Supreme Court of the United States, but two additional decisions of inferior courts have during the year affirmed the criminal liability of violators of the regulations prescribed by the Secretary of Agriculture. The civil liability of trespassers has never been questioned.

SILVICULTURE.

The practice of forestry begins with the cutting of timber; the principal tools used in cultivating a forest are the saw and ax. Preparation of the ground for a future crop is accomplished by felling the mature growth, and control of the character of the future forest is through decision as to what trees shall be removed and what left standing, unless renewal is to be brought about solely through planting. It is, then, through timber sales that forest management is being introduced upon the National Forests.

Receipts from the sale of timber from the Forests increased threefold over those of the year before, and brought in $600,000. But a better gauge of the rate at which the demand of the public for timber is increasing is the contracts made by purchasers. When large bodies of mature timber are so situated that they can be utilized only by a purchaser who can undertake operations on a large scale, sales are made under contracts permitting the work to be continued through several successive years, a specified amount being cut each year. No contracts are made for a longer period than five years. In other words, sufficient time is given to enable a large operation to be carried through, but speculative purchases are not allowed. The sales contracted for during the year totaled 950,000,000 board feet of lumber, besides cordwood and other material, with an aggregate value for all classes of material of over $2,500,000, as against $500,000 sold the previous year.

It is evident that if the demand for timber continues no greater and prices go no higher than at present the Government will in five years be taking in from timber sales at least $2,500,000 annually, since payments will then be coming in on contracts entered into each intervening year. But the demand is certain to increase up to the full amount which the Forests can supply. Eventually it will be necessary to impose a limit to the cut, which must never exceed the rate of growth. Anything beyond this is overcutting. The farmer who fails to make one grain crop last over until the next one matures can usually buy from others, but for many communities dependent on National Forests for their supplies of wood no outside sources of supply are likely to be available. Data are now being gathered from which to compute the present stand and the rate of growth on the different forests, in order that excessive cutting may be prevented.

To become productive, however, a forest must begin to be cut over. No wood is making in a mature forest. Such a forest is simply a storehouse of wood. But after young growth gets under way the forest becomes a manufactory of wood. So far as is consistent with a proper regard for the needs of the future, all mature timber on National Forests is available for use. Waste in utilization of timber cut is not permitted; slash is piled and, if necessary, burned to lessen the fire risk; unnecessary destruction of young growth is prevented; and measures are taken to insure reproduction from self-sown seed.

The work of marking and scaling timber, enforcing contract stipulations, and other matters incidental to the sales, combined with the demands made by the free-use applications, called for the most strenuous efforts on the part of the administrative force, and often compelled the neglect of other duties.

In addition to the work on the National Forests, forest studies were carried on in cooperation with the States of California, Delaware,

Kentucky, and Missouri, and assistance was given to private owners of woodland concerning the management of their tracts.

FOREST PRODUCTS.

Hand in hand with the work which seeks to enlarge our future supplies of timber goes that which seeks to secure the best and most economical use of what we have. Important results have marked the work of the year in this line. The studies of the Forest Service in the field of wood preservation have now reached a point at which it may be predicted with some confidence that the treatment of timber for use under conditions which expose it to rapid decay will soon become widespread. This will mean a marked reduction in the drain upon our forests.

An easy and inexpensive method of treating fence posts has been perfected which makes it possible for any farmer to make the quickly decaying woods, still abundant because hitherto thought almost worthless, far more durable than untreated white oak or chestnut. Demonstrations of this method before southern farmers were received with enthusiasm. For the Middle West, where the common woods are seldom resistant to decay, the matter is certainly no less important. Essentially the same method is being applied to the butts of telegraph poles and to mine props. The enormous consumption of timber for the latter purpose and the extreme rapidity with which it decays in the dampness and darkness of the mine open the prospect of a large economy from the use of this method of treatment, which has stood a searching practical test in Pennsylvania coal mines. By applying the same treatment to timbers from the National Forests a use will be found for dead wood and a decided benefit will be conferred on the users of the timber. The work includes a study of the comparative merits of different kinds of preserving fluids.

The investigations aimed at discovering new sources of paper pulp have demonstrated that a number of woods of abundant supply, never in the past thought of for the manufacture of paper, are capable of yielding pulp of standard grade. Studies in wood distillation are establishing the practicability of obtaining turpentine from waste southern pine material.

Ten thousand separate tests of the strength of timber, largely in the form of full-sized structural beams, have established the relative value of a number of woods and proved the fitness for hitherto unthought of uses of several of them.

Studies of wood production and consumption have added materially to our knowledge of the rate at which we are drawing upon our reserves of standing timber.

BUFFALO IN WICHITA NATIONAL FOREST.

On March 25, 1907, the New York Zoological Society arranged with this Department to establish a herd of American bison on the Wichita National Forest in order to provide for the perpetuation of the species. The Zoological Society offered to send 18 buffalo of pure breed from the New York Zoological Park to the Forest. An appropriation of $15,000 was made by Congress for the purpose of fencing a buffalo pasture and providing the necessary buildings. This work will be completed early in the ensuing fiscal year. An area of about 8,000 acres is inclosed, and the herd placed under the care of a forest officer experienced in the handling of buffalo.

BUREAU OF CHEMISTRY.

INCEPTION OF THE WORK FOR THE ENFORCEMENT OF THE FOOD AND DRUGS ACT.

During this fiscal year an unusual development in the work of the Bureau of Chemistry has taken place, due to the enactment of the food and drugs act of June 30, 1906, which became effective on the first day of January, 1907.

ESTABLISHMENT OF REGULATIONS.

Previous to this date it was necessary to carry out the provisions of the law for the establishment of regulations. To this end a committee consisting of H. W. Wiley, Chief of the Bureau of Chemistry; S. N. D. North, Director of the Census Bureau of the Department of Commerce and Labor, and James L. Gerry, Chief of the Division of Customs of the Treasury Department, acting for the Secretaries of Agriculture, of Commerce and Labor, and of the Treasury, respectively, prepared a set of tentative regulations. Great care was exercised in the preparation of these regulations, not only that the provisions of the law should be executed fully, but also that there should be no unnecessary annoyance or burden placed upon the trade. The regulations were finally completed, signed, and promulgated on October 17, 1906, as Circular 21 of the Secretary's office.

Between January 1 and June 30, 1907, the personnel of the Bureau was more than doubled, the increase being divided among the clerical force, the chemical assistants, and the corps of inspectors. While work incident to the enforcement of the interstate feature of the law was in process of organization, a much more rigid execution of the law relating to imported foods was established. This was possible because under the previous laws the machinery for the inspection and analysis of imported foods had been already well organized.

SUPPORT ACCORDED THE NEW LAW.

Although up to the 1st of July no actual cases had been instituted in the courts under the food and drugs act, the moral effect of it was apparent in every branch of trade connected with the food industry. One of the most gratifying features of this preliminary activity has been the almost unanimous support accorded by the trade to the principles of the law. In most instances manufacturers of food products, as well as dealers therein, have expressed their cordial support of the act and offered their hearty cooperation in securing its execution. The importance of this fact can not be overestimated, since the difficulty of enforcement, if the entire trade were opposed, would be practically insuperable. Supported, however, not only by public opinion, but also by the active collaboration of producer and consumer, the food law will have that moral support which is absolutely necessary to secure more wholesome and properly branded food and drug products for the market.

APPOINTMENT OF FOOD AND DRUG INSPECTORS.

A civil-service examination was held to secure inspectors for the enforcement of the food and drugs act, appointments were made, and on June 3 these inspectors reported at Washington for instructions as to the policy to be pursued in the enforcement of the food and drugs act and the practical details of inspection and sampling. By June 30, 1907, the inspectors had been assigned their respective territories and had taken up temporary headquarters there. In making these assignments two objects were kept in view, namely, the location of branch food and drug inspection laboratories and the strategic positions offered by channels of interstate commerce.

ORGANIZATION OF FOOD AND DRUG INSPECTION WORK.

The board of food and drug inspection was created by the Secretary of Agriculture on April 25, 1907. The duties of the board are to consider all questions arising in the enforcement of the food and drugs act of June 30, 1906. The Bureau of Chemistry is charged under the act to perform whatever analytical work may be required for the information of the board. The board reports directly to the Secretary. Its personnel is as follows: H. W. Wiley, Chemist and Chief of Bureau, chairman; F. L. Dunlap, Associate Chemist; and G. P. McCabe, Solicitor of the Department.

Food and drug inspection laboratories are now established, or are being installed, at New York, Boston, Philadelphia, Chicago, New Orleans, San Francisco, St. Paul, Detroit, Savannah, Seattle, Buffalo, Kansas City, Denver, Galveston, Portland (Oreg.), and Cincinnati. Others will be established as the work requires.

These laboratories examine the imported samples taken at the port of entry and the interstate samples sent in by the inspectors, referring violations of the law and doubtful cases to the Washington office for action, and releasing those found to be according to law.

FOOD RESEARCH WORK.

In nearly all of the laboratories of the Bureau of Chemistry important research work bearing on practical problems in the analysis of foods, drugs, or cattle foods is in progress, the elaboration of new methods and the improvement of those in use being of the greatest importance in the examination of products under the law. Investigations illustrative of such researches are as follows: Work on the composition and adulteration of flavoring extracts and methods for their analysis; the effect of cold storage on fowl, game, milk, and eggs, in which work the bacteriological chemists play an important part; the study of canning products, such as canned corn, tomatoes, peas, catsups, etc., with special reference to the use of preservatives, including both factory inspection and laboratory experiments; methods for detection of the artificial coating of rice; a study of American honeys, involving the chemical analysis of 112 samples and the microscopical examination of the pollens found therein; an investigation of the ice cream and milk supply of Washington, D. C., in the course of which about 800 samples were examined from both a chemical and bacteriological point of view; and an analytical and microscopical examination of American cattle foods as found on the market, including 365 samples.

The question of the use of sulphur in bleaching food products has been given special attention and valuable data have been obtained, both as to the accuracy of the analytical methods employed for the detection of free and combined sulphurous acid and as to the extent of the use of this bleaching agent.

The other phase of this question, namely, the effect of sulphurous acid and sulphites as determined by physiological experiment upon 12 young men at the hygienic table conducted by this Bureau, was solved by the compilation and comparison of the data so obtained, which show unmistakably the injurious effects of this preservative, especially in reducing the number of red corpuscles in the blood.

The researches in the drug laboratory included, among others, the examination of samples furnished by the Post-Office Department of drugs sent through the mails, samples of drugs submitted by the Council of Pharmacy and Chemistry of the American Medical Association, the examination of hops and of glycerin to determine whether they were contaminated with arsenic, and of miscellaneous drug products, such as headache powders and so-called "kidney

cures." Much important work on methods has been done, including a special study of methods for the detection of enzyms in medicinal agents, especially for the purpose of ascertaining to what extent these bodies render various substances available to the human system.

MISCELLANEOUS INVESTIGATIONS.

Among other important studies conducted in the Bureau of Chemistry, having a direct and practical bearing on the agricultural interests of the country, are the following: Examination of insecticides and fungicides; study of the effects of trade wastes, particularly smelter waste, on vegetable and animal life; investigations looking to the utilization of the native wild sumac as a source of tannin; studies for the development of the wood turpentine industry, and cooperative experiments on the effect of varying climatic conditions on wheats, particularly on newly introduced varieties, and on the sugar content of Indian sweet corn.

CONTRACTS WORK.

The value of the examinations made of Government supplies furnished on contract is shown by the fact that the number of samples analyzed in this laboratory was almost doubled during the past year. The examinations on which the purchase of practically the entire supplies of the Bureau of Engraving and Printing was based alone aggregated nearly 400 samples. The varied character of the samples received makes necessary considerable research work for the development of suitable methods. Both a monetary advantage and an improvement in the character of the supplies is insured by the surveillance of this laboratory.

BUREAU OF SOILS.

There are in the continental United States 1,900,947,200 acres of land. Of this, the Tenth Census showed 838,591,774 acres in farms, with 414,498,487 acres in improved lands and 289,734,591 acres actually in crops.

With a more thorough knowledge of the soil and its adaptation to crops and the proper methods of soil management, the full extent of the agricultural development which may take place in the United States in the future is very great. The undeveloped portions of the United States are not confined wholly to the arid West, portions of which are now rapidly filling up, although this constitutes the greater part. When we realize that we have 77,000,000 acres of swamp land in the eastern half of the United States—an area equal to all of the New England States, New York, and half of Pennsylvania, or to the combined areas of Illinois and Iowa—which can be reclaimed,

and which, under the prevailing climatic conditions when so reclaimed, are exceedingly productive, and when we realize that only 16 per cent of the State of Louisiana, for example, and a smaller percentage of the State of Texas is in improved lands, the possibilities of development become more apparent.

The soil-survey work of the Bureau is the largest undertaking of the kind that has ever been inaugurated in any country. The area surveyed and mapped during the past fiscal year was 20,560 square miles, or 13,158,400 acres, and there have been completed to June 30, 1907, surveys covering a total of 139,247 square miles, or 89,118,080 acres. This area is more than 15 per cent of the amount represented by the farm lands of the United States as given in the preceding paragraph. The work has been so distributed as to include every large representative district in the United States, and has given a knowledge of the soil resources of the country far beyond what was ever conceived of before.

THE PROBLEM OF SOIL FERTILITY.

The Bureau, not content with merely showing the character of the soils and reporting upon their adaptation to crops, has, under the wise provisions of Congressional enactment, been very active in actual demonstrations of the possibilities of further development of these lands in the extension and introduction of new crops and developing new agricultural industries. In addition to this the Bureau has made a special study of some of these soils and of the soil conditions controlling fertility and crop production; and these investigations have given a new view point of the whole subject of soil science, which has aroused a new interest in soil investigations.

As in all large concepts of this character in such a complicated study as the soil and its relation to crop production, it is impossible to see to the fullest extent, while the details of the work are being developed, the broad scope that it may finally cover. It is impossible to see at the present time the bearing that some of the observations made in the laboratories may have in their application under field conditions and cultural methods, but enough has been demonstrated to indicate the substantial soundness of the position which has been taken.

One of the most important problems now confronting the agricultural public is the intelligent use of commercial fertilizers. In some sections of our country, especially in the South and East, the quantities now used are enormous, and this use is gradually extending. That the amount of money annually invested in fertilizers by the farmers of the country, now amounting to upward of $100,000,000, will continue to increase seems certain. But just as certainly a large percentage of the money—perhaps a third—is annually wasted and

brings no adequate return, owing to a lack of understanding of the soil's requirements.

This problem has been engaging the attention of the Bureau of Soils for a number of years, and it has been found that this wastage of the farmer's capital is due in large measure to incorrect ideas which have long prevailed regarding the manner in which the soils feed our crops and the influence of fertilizers upon this feeding. As might be expected from their origin, soils contain numerous fragments of the common rock-forming minerals. These fragments are accompanied more or less by alteration and decomposition products.

It is rarely if ever true that a soil is formed from any particular mineral or rock, but owing to the action of streams, winds, etc., the rock powders comprising the soil are much mixed and intermingled. Consequently it has been found that practically all soils contain more or less of all the common rock-forming minerals, containing among other things the important plant-food ingredients, potash, phosphoric acid, and lime. The important element, nitrogen, is of course supplied from other than mineral sources, either by decomposition of organic remains or from the atmosphere through living organisms.

The widely diffused minerals of the soil are all slightly soluble in the soil water, and it has been shown that this solution is the natural source of food supply for the plants. As the dissolved plant nutrients are removed, either by the growing plants or by other natural agencies, the minerals continue to dissolve and thus replenish the solution. As these minerals are so widely distributed in various soils, the mineral composition of the plant-food solution is not very different in different soils. The natural processes following evaporation at the surface of the soil, from plant leaves, etc., cause an upward movement of soil moisture from the subsoil, and often from great depths. These solutions rising from below carry dissolved mineral plant nutrients; but when they reach the surface soil the strength of the solution there is not much increased, owing to a power of absorption or the fixing of these salts which the soil possesses. Thus the soil is in a sense "enriched" by these desirable constituents, although the actual feeding medium for the plant is not essentially altered. Similarly, artificial enrichment of the soil by commercial fertilizers does not materially affect the mineral composition of the soil solution, as is popularly supposed, but has other profound and far-reaching functions which our recent researches are now making clear.

It has been found that infertility in soils is very frequently due to the presence of bodies deleterious to plant growth, and the difficult task of isolating and identifying these bodies and studying their effects on plant growth has been undertaken in the work of this Bu-

reau. Several of these substances have actually been removed from the soil and their properties determined. It has been shown that these bodies of organic origin result, under unfavorable soil conditions, from the decay of plant tissue, from excreta of germinating seeds, and from excreta of roots of growing plants. Under favorable soil conditions and under cultivation, proper drainage, suitable crop adaptations, crop rotations, and judicious use of fertilizers these organic bodies are absorbed or destroyed, providing a suitable and healthy environment for crops. Crop rotation is especially useful, since it has been found that the excreta of one plant are not necessarily deleterious to another kind of plant, and different species of plants themselves aid in the destruction and removal of deleterious organic substances. Of no less importance, because they are subject to better control, are the natural manures and artificial fertilizers. A rational use of these means of soil control, and especially of commercial fertilizers and soil correctives which now absorb so large a proportion of our farmers' working capital, is the fundamental problem of present day agriculture.

It is most gratifying to be able to announce such substantial progress in the investigations of the real causes for the fertility or infertility of our agricultural lands.

TOBACCO SOILS.

As a direct result of the soil surveys and of the laboratory investigations, the possibility of producing a finer textured tobacco wrapper leaf in the Connecticut Valley was taken up, and it has been developed to a point where it is assured that a leaf approaching the Sumatra tobacco in texture, but with other local and distinctive characteristics, has been produced in the Connecticut Valley; and, largely as a result of the Bureau's work in Florida, the American-grown wrapper leaf has taken a foremost rank, is being exported to foreign countries, and is taking its place in real competition with the Sumatra leaf. The interest in this shade-grown product has grown to large proportions and the extension of this industry is contingent to a very large extent upon the soil surveys which shall point out the soils upon which this desirable leaf can be produced.

On certain soils in Texas and Alabama the Cuban type of leaf has been introduced as a direct result of the soil surveys, after a thorough examination of the soils and conditions of growth in Cuba, and as a result of demonstration work by the experts of the Bureau of Soils there are now hundreds of acres of land in both of these States producing the finest filler leaf, suitable for high-grade cigars.

Of so great importance has this work appeared that an informal application has been made by officials in Cuba for the extension of the

soil survey to that country, to aid them in the further development and the better understanding of their own soils and the improvement of their tobacco industry.

In New York the reason for the variation in the type of tobacco has been found in the fact that the adaptation of the soils to the different varieties of tobacco has not formerly been understood or conceived, and the entire solution of the perplexing problem of the commercial crop in New York is now in a fair way of being solved by the utilization of the soil maps of the tobacco districts and the adaptation of varieties and of cultural methods to the soils suitable for particular commercial grades.

In Ohio the whole method of fermentation and handling of tobacco has been changed, with important results in the improvement of the crop and the prevention of the losses which occurred under the old methods of handling the leaf.

In Virginia not only has marked improvement in the grade of tobacco produced been shown to be possible by the Bureau's work, but by the proper handling of the soil through modern methods of culture and of fertilization the lands have been left in so much better condition after the tobacco crop has been removed that without further special treatment the yield of subsequent crops of wheat has been increased threefold and the lands have produced heavy crops of hay where formerly this crop was not even considered a possibility.

While the soil problems concerned in tobacco culture are receiving attention in the Bureau of Soils, to avoid any seeming conflict or duplication of work I have transferred all the cultural work in tobacco to the Bureau of Plant Industry for investigations on the further improvement through selection of seed and breeding, while the Bureau of Soils will continue its soil survey and soil investigations of the important tobacco districts as a basis for continued improvement and a safe development of the whole specialized industry of tobacco culture.

PRACTICAL USES OF SOIL MAPS AND REPORTS.

Incidentally the War Department has on file a complete set of the soil maps thus far made, and is supplied, at its request, with copies of all soil-survey reports as soon as issued for the information of the military service in deciding on camp sites, on the character of the soils over large districts where they may be called to operate, and for other information that may be of importance in military plans.

The Post-Office Department is utilizing the maps to a considerable extent and frequently calls for advance copies for assistance in the location of rural free-delivery routes. Life-insurance companies and trust companies are availing themselves of the information contained

in the soil-survey reports and maps in assessing risks and making investments of money. Nurserymen and seedsmen are availing themselves of the information furnished regarding the crops and fruits adapted to certain soils in certain localities. Plow manufacturers are utilizing this work to the extent of modifying farm machinery for adaptation to certain soils and certain regions to produce the most efficient work in cultivation.

By detailed soil surveys the Bureau is furnishing expert advice on the crop adaptations of the soils in those areas where irrigation schemes are effecting a change from extensively dry-farmed wheat ranches to intensively farmed fruit and alfalfa ranches.

In cooperation with the United States Reclamation Service, soil surveys are being made of the projects soon to be available for settlement upon completion of the necessary storage reservoirs and canals constructed by Federal effort. The soils of many of these projects have never been cultivated, and the newcomer to be successful must have the best information obtainable about the soils and the most profitable crops.

The successful introduction of new crops in the semiarid region depends largely on the ability of the soil to conserve the scant rainfall. Surveys have been made of many areas in this region, chiefly in North Dakota, to outline those soil types on which crops can be cultivated with safety.

The soil survey reports, by calling attention to the soil resources and the opportunities offered to acquire good farm lands at a low figure, have frequently been of great assistance to the railroad companies in colonizing the territory in which they operate. Appreciating the value of the information contained in the reports, the railroads have in some cases arranged with the lithographic firms for specially large editions of the soil maps for distribution among prospective settlers.

Many large-scale detailed soil surveys have been made of experiment station farms and agricultural high school farms showing all of the minor differences in the soils of each farm. These soil maps have proved of great value in connection with the various plat fertilizer and rotation experiments conducted on the different farms.

Demonstration experiments on all the various kinds of alkali land found in the arid West have shown that the farmer need no longer dread alkali, but that such land can be easily reclaimed and made productive. The alkali problem has been satisfactorily solved and is in reality not as serious as many of the soil problems confronting the eastern farmer.

Special study of the viticultural soils in California has shown that there is a direct relation between the soil and the color, yield, and

commercial value of the grape; that there are large bodies of soil very well adapted to various kinds of grapes, and that the grape industry can be greatly extended in many parts of California.

Soil surveys and special study have shown that there are large areas of soils in Arkansas and California that are peculiarly suited to rice culture and that the introduction of this crop will prove a boon to farmers owning such land that has hitherto been held to be of low agricultural value.

Investigations of the apple soils of California have shown that there is a close relationship between the keeping qualities of the apples and the various kinds of soils on which they are grown. This is very important and should prove of great value to apple growers in planting new orchards.

Soil surveys of swamp lands reclaimed generations ago as well as surveys and special studies of unreclaimed swamps in many States have shown the possibilities of swamp soils. The knowledge that some of these reclaimed swamp lands are still exceedingly fertile after one hundred years of constant cropping without fertilizers has helped arouse a general interest in the drainage of swamps. Again, the information brought out by the soil survey that certain swamps contain lands of low agricultural value shows the importance of a thorough knowledge of the soil and its possibilities before we can plan intelligently reclamation schemes involving the expenditure of large sums of money.

The results of the work of the Bureau of Soils have been presented directly to the people of the United States through the medium of educational tours conducted in ten different States. There have been held over 100 meetings for which the Bureau of Soils has contributed speakers to discuss the results of soil-survey work and methods of soil utilization and soil management. A great interest has been manifested in these meetings, and an opportunity has been afforded for answering many questions which were presented to the speakers in connection with this work.

The Bureau has assigned men to many localities in which soil surveys have been made to advise with farmers in regard to the character of their soils, the crops which may be grown to the best advantage, and methods of handling the soils to derive the greatest returns. The demand for this character of work is increasing as the number of completed soil surveys increases.

The fertilizer requirements of extensive soil types are being determined through laboratory and greenhouse methods and field observations in order to effect a saving in the fertilizer bill of the country.

Field investigations have been made to increase crop production on extensive areas of different soil types which, with the usual methods of cultivation, do not yield particularly remunerative crops. In many

cases slight modifications of the methods of mechanical handling of the land increase the crop-producing power of such soils to a marked degree. Frequently tile drainage or the use of open ditches or other simple measures has been found sufficient. In other cases increased depth of plowing, change from spring plowing to fall plowing, the growth of cover crops to protect the land from washing during the winter rains, or the incorporation of organic matter with the soil serves to render soils formerly held in little esteem of high producing value. This work is being developed as fast as possible.

The soil survey has found extensive areas of soils well suited to alfalfa culture, not only in Texas, but also in northern Mississippi and in central Alabama. It has been found that alfalfa soils occur in New York in localities where this industry has not yet been established, and in other Northern States as well. Upon some of these soils practically no other crop of high value is grown at the present time. The soil-survey work should be extended in order to outline more fully the localities where these soils exist. A special study should also be made of the preparation, the tillage, and the manurial requirements of these soils for successful alfalfa production.

The Bureau has materially aided in the development of the early truck and fruit industry in the Atlantic and Gulf Coast States. It has shown that there is a close relationship between the soils of different localities and the character of the truck crops which can be raised. The principal requirements of soils suited to early truck crops have been found to be small clay content, insuring excellent drainage and ease in cultivation and quick response to applications of fertilizers, and nearness to bodies of water, insuring freedom from frost. The soil survey has outlined large areas of land suitable for early truck and has been instrumental in the development of this important industry.

The Bureau is studying the characteristics of soils best suited to the production of the different varieties of cotton, notably the long staple and some of the improved varieties which are being used in an attempt to meet the boll-weevil conditions of the Southern and Southwestern States. Investigations have shown that types of cotton which grow to perfection upon loose sandy lands rapidly lose their essential characteristics if the seed from such cotton is planted on heavy clay soils or upon moist bottom lands.

Large areas of timber land have been cut over through a considerable portion of the South Atlantic and Gulf States and also in portions of the States bordering the Great Lakes. The proper use of these lands has not been well understood during the past, and it has frequently been maintained that with the removal of the timber these soils were of very small value. It has been found, however, that by the adoption of special methods of tillage, including the

incorporation of organic matter and a moderate degree of fertilization, many of these soils are capable of producing the ordinary staple crops to good advantage. Some of these soils in the South Atlantic and Gulf Coast States have been found to correspond closely with the highly valuable truck and market-garden soils which have already been highly developed agriculturally.

Investigations have been made of the agricultural possibilities of the Piedmont section of the eastern United States. The rapid development of manufacturing interests throughout this section, with the accompanying growth of consuming population in the larger cities and towns, will soon render necessary the local production of such food supplies as are now to a marked degree shipped into these communities from remote localities. Changes from the production of staple crops to the production of special crops require careful study of the adaptation of soils to crops and the proper management of the soils and particularly of the application of fertilizers and manures. In addition, many other cities of the central and southern United States are becoming aware of the necessity for the production of a large part of the perishable food supply of such cities in near-by districts. The importance of such investigations is emphasized by the marked growth of urban population as contrasted with a slight growth in rural population, or, in some cases, with an actual decrease of population in the farming districts.

Soil surveys have been undertaken in some of the New England States to determine the capabilities of lands which were formerly cultivated to corn, wheat, oats, and other grain crops, but which since have reverted to pasturage or have been altogether abandoned. It has been found that considerable areas of the rougher, steeper lands should be planted to seedling white pine trees, in order to insure a renewal of the timber supply of those sections, and that such an occupation of the rougher lands is probably the most desirable use to which they could be put. The more favorably situated soils can be profitably used for fruit and vegetable crops, which may be raised to advantage, and a ready market can be found among the summer resorts of this section of the country. The hill pastures of this section are well suited, under proper methods of cultivation and seeding, to the production of valuable pasture and forage grasses, by means of which the sheep industry may be reestablished throughout a considerable portion of the New England States. This would seem to be particularly desirable, as sheep do not require the extensive production of corn or other grain feed.

Careful study has been made in southern New York, northern Pennsylvania, and northeastern Ohio of approximately 10,000 square miles of hill and plateau belonging to a single soil series, over which the character of farming at the present time is not well suited to the

soils or the climatic conditions. In this region there has been a continued tendency toward more extensive farming and away from specialization in crop production. In some cases attention has been called to the actual desertion of farm homes and to the coalescing of smaller farms into the larger holdings. This study has made evident the fact that the introduction of special crops, and particularly the adoption of proper methods of soil cultivation and soil fertilization, would make possible a more profitable system of farming. The present price of farm lands throughout this area is so low that these lands offer exceptional opportunities for the development of the orchard industry, animal husbandry based upon the production of grass and small grain crops, the production of white potatoes, and certain other specialties adapted to the general locality. These lands are located within a short distance of the greatest centers of population in the United States, and might be made highly productive and certainly remunerative with proper methods of crop adaptation and soil management.

SOIL EROSION.

Another line of work in the Bureau relates to soil erosion. According to the latest determinations (beginning with the classic measurements of the Mississippi by Humphreys and Abbot) the rivers of mainland United States are annually pouring into the seas fully 1,000,000,000 tons of sediment. This sediment is carried partly in solution, but chiefly in suspension, in the 35,000,000,000,000 cubic feet or more of river water drained from the United States, and is additional to the coarser detritus pushed or rolled along the sides of the swifter streams. The volume of material thus lost to the land is increasing with settlement and cultivation; it is almost wholly washed from the surface and is the very richest soil material, the cream of the soil. The value of the material is not easily fixed, but at a moderate appraisal the annual loss would exceed all the land taxes of the country. Besides impoverishing the soil, the sediment pollutes the waters, reducing their value for domestic and manufacturing purposes and endangering the lives of those compelled to use them, and causes streams to scour their channels and build bars; and through scouring and building it compels the lower rivers to shift and overflow, thereby reducing the value of fertile bottom lands. However estimated, the loss is enormous, and the chain of evils resulting from the annual erosion of this billion tons of soil is long and complex, and leads directly back to the farm.

The nature of the soil is determined by the water within it. When rains fall or snows melt on the land, the water passes in different ways. A part evaporates directly into the air; another part (generally much larger) flows down the slopes to the streams and thence to

the sea—this is the run-off; a third fraction soaks into the soil and subsoil and thence into the underlying rocks, perhaps to reappear in springs or as seepage into streams—this is the ground water; still another part is absorbed by organisms (chiefly trees, grasses, crop plants, etc.) either directly through tissues or indirectly through roots penetrating the moistened soil. Erosion is due directly to the run-off, of which the ratio is dependent partly on slope, but chiefly on the nature of the soil and its product; indeed, with any reasonable slope, a full cover of forest or grass with an abundant mulch, or a close crop on deeply broken soil, or a friable furrow slice kept loose by suitable cultivation, will so fully absorb precipitation as to curtail the run-off or even reduce it to slow seepage through the surface soil—the ideal condition and the one toward which modern agriculture should be bent. It is the third fraction—the ground water—that forms the most essential constituent of the soil, for solution, circulation, and organic assimilation are all absolutely dependent on water; indeed, the greater part of all organic tissue is made up of this solvent, which comprises a large percentage of the bodies and of the food of man and lower animals.

The ratio of ground water in the soil is vital. All soils contain more or less, though if the quantity is small it may be too firmly locked up in mechanical combinations to be available for plants, as in deserts which are naturally barren, yet burst into fruitfulness with a few acre-inches of irrigation. If the quantity is excessive, circulation may be so impeded that cultivation only settles the soil in a sodden mass—sticky when wet, baked crust when dry—while the surcharged condition prevents further absorption and sends the waters of storm and thaw over the surface to engage in destructive erosion even on easy slopes. The fraction of natural water supply assimilated by organisms is susceptible of control and increase by selection of crops and by maintaining the requisite soil texture and ratio of soil water, and these means tend directly or indirectly toward counteracting and eventually eliminating erosion. Thus water is not merely the chief value inhering in the soil, for it is susceptible of such control as to multiply its benefits and eliminate its evils.

The immediate source of our prosperity is the soil of the American farm, and it is a National duty to see that the soil is conserved and the farm improved for the immediate benefit of the farmer and the ultimate welfare of the country. One of the richest assets of the nation is the water that falls on the farms, permeates the soil, permits organic growth, and after enriching the land flows seaward through the commonwealths to furnish substance and power and afford means of commerce; and it is coming to be recognized as one important duty of the nation to see that this water shall be so controlled and conserved as to yield the greatest benefits to the hold-

ers of the land on which it gathers, and eventually to all the people. At the same time the evils of soil erosion begin on the farm, and while they extend thence to the pollution of the streams of the States and the obstruction of interstate rivers, it is becoming clear that the remedy must begin with the farm and that it is a national duty to see that the remedy is prescribed and applied.

Some of the remedial devices may be noted. Since the chief object is to so regulate the capacity of the soil for water that it will absorb the product of each rainfall or thaw without run-off and retain the moisture for both plant supply and seepage, deep cultivation is desirable. This is useful, too, not only in bringing up fresh earth salts to within reach of the shorter rootlets, but in performing the still more important office of carrying down humus and mulch to thicken the soil and feed the deeper roots.

In flat-lying fields and tenacious soils, where the ground water moves sluggishly, deep underdrainage (preferably tile) is required. The primary effect of deep drainage is to permit both soil and subsoil to crumble and disintegrate, and through the mechanical and chemical changes thereby induced to become friable and susceptible of retaining the right amount of moisture for plant growth; the secondary effects are reduction of surface run-off and checking of erosion, and acceleration of stream flow after storms through the quicker gathering of the storm waters. The clear flow from the drains neither pollutes nor obstructs the streams, but leaves their waters in condition for ready control by other means.

On rolling farms contour cultivation is desirable; the plow furrows and crop rows should be carried along the slopes in such manner that each furrow and row will lie level; when the plow and cultivator, instead of opening runnels to be enlarged into gullies by the first storm, will close runnels and gullies already opened and form receptacles in which the storm waters may lodge until soaked into the soil.

On hilly lands the contour cultivation should be supplemented by "balks" or "breaks," i. e., by strips of grass land separating belts or zones of plowland; and these, like the furrows, should curve with the slopes in plan and lie level in elevation. They should be carefully laid out; for, properly managed, each grass-land balk with the belt of plowland next above it will grow into a terrace without special effort, since some soil descends when stirred by plow or storm and lodges in the upper margin of the sward, raising this line until both plowland and grass land are brought into equilibrium.

Over foothills and deeply broken country ordinary agriculture should grade into silviculture and forestry, perhaps combined with horticulture and grazing; for here storm waters tend to gather into torrents, quickly passing beyond control if once allowed to form, yet easily prevented from forming by making mulch and soil so deep and

spongy as to absorb not only the gentle rain, but the inch or two sometimes dropped by thunderstorm or cloudburst.

Over all mountain divides and crests below timber line forests should be retained and extended; for, as seen by settlers and happily expressed by Spanish-speaking neighbors, the mountains are the mothers of waters, and nearly every lofty range is a local "Sierra Madre," and the clearness and purity of these waters and their uniformity of flow is proportionate to the perfection of the forest cover. In earlier decades, when forests were viewed only as obstructions, silviculture was profitless; but now that the accumulated growth of a thousand years has been largely squandered, forestry is becoming a branch of agriculture no less profitable than others. It remains only to classify and assign our slopes and soils to those crops to which they are best adapted, whether these be grains or grasses or vines or trees.

In extending the principles and applications of American agriculture three steps are contemplated in the operations of the Bureau—education, individual action, and collective action.

The education need involve little more than diffusion of information on a few leading points, such as the magnitude of the annual loss due to soil erosion, the facility with which this can be checked, and the certainty that the remedy can be made not only inexpensive, but actually profitable to each person applying it. Given this information, American intelligence and enterprise may be counted on to meet the occasion.

The chief individual action required is along the lines of improved agriculture, with more intensive methods, more thoughtful conservation of soil matter and crops and their by-products, more careful attention to ground water; and here, as elsewhere, public spirit is the strongest incentive to private conduct.

In general the collective action will develop materially with the growing knowledge of communities, yet it should be aided as needed by State and Federal instrumentalities. The keynote to such action sounds in the social principle that in the long run the good of the individual is the good of the community, and in the legal principle that each so use his own as not to injure others. The direct loss through soil erosion is very great and begins on each farm and affects every community. The indirect loss is no less, perhaps greater, for the streams are fouled, water power is jeopardized, navigation is impeded or prevented, and floods are raised; and since in the end the responsibility rests with the men on whose farms the evil starts, the remedy must begin with the farming community and should be guided by the interests of the whole people.

BUREAU OF ENTOMOLOGY.

Excellent results have been gained by the work of this Bureau in the course of investigations that have for some time been under way, and by order of Congress new investigations have been begun.

THE MEXICAN COTTON BOLL WEEVIL.

This very destructive insect has shown itself more adaptable to changed conditions, and therefore more capable of extending spread, than any other insect originating in the Tropics that has ever entered United States territory. It has established itself, contrary to anticipations, north of the line of early frosts, and there will probably be no climatic barrier to its spread throughout the whole cotton belt. Its northward and eastward spread has continued since my last report, and in the early autumn of 1907 it was found to have crossed the Mississippi River and to have entered the State of Mississippi.

Under the greatly changed conditions of soil and moisture existing in the bottom lands of Louisiana and Mississippi, the insect is changing its habits.

PARASITES AND NATURAL ENEMIES.

The careful studies that have been carried on have shown, however, that as the period of the occupancy of United States territory by the boll weevil lengthens the native parasites and natural enemies are becoming accustomed to it and are attacking it with increasing effectiveness year by year. It is now known that fifteen different insects which attack the boll weevil in its immature stages are at work in the infested territory, and the number is undoubtedly increasing. This is not a matter of small importance, since during the past season in a field near Waco, Tex., it was found that fully 40 per cent of the weevils had been killed by the combined work of several species of parasites. Practical results of parasite work are in sight, and in one experiment the mortality rate of the weevil was raised 9 per cent in two weeks by the introduction of parasites from one region to another where they were absent, or present in small numbers.

There are a number of species of weevils that attack native weeds, but which will not attack cotton. The parasites of these native weed-feeding weevils will attack the cotton boll weevil; and it has been found, after careful study of these insects and of their parasites, that where the natural food plants of the native weevils are destroyed about cotton fields at a certain time, the parasites of these weevils, in the absence of their normal food, will attack the cotton boll weevil to such an extent as very considerably to increase the mortality of the boll weevil. The native fire-ant, occurring throughout the cotton belt, is rapidly acquiring the habit of feeding upon the boll weevil.

In one case, at Beeville, Tex., where the boll weevil has been known for at least twelve years, during the past year in a certain field three-fourths of the weevils in fallen squares were found to have been destroyed by this ant. Careful studies have been made and are now being made of the special conditions favorable to the increase of this ant and of the different parasites, and it seems very probable that practical results will follow.

FIELD EXPERIMENTATION.

As in preceding years, a number of large-scale experiments in different regions where the weevil problem assumes a local aspect were carried on. Nearly 1,000 acres, in lots varying from 10 to 65 acres in extent, were used in this work.

Most important results have been gained in a test of the efficacy of the fall destruction of cotton plants. In one isolated locality in Calhoun and Jackson counties, Tex., badly infested with the weevil, 410 acres, comprising all of the cotton in that vicinity and separated from other cotton plantings by about 10 miles, were cut during the first ten days of October, 1906. In Lavaca County, 30 miles away, a considerable quantity of cotton is grown at Six Mile Settlement. This cotton was not destroyed, and the fields were kept under observation as a check. The results were as follows:

In May, 1907, in the experimental fields only one weevil was found, whereas in the check fields practically all of the squares had been destroyed. In September, 1907, the cotton in the experimental fields showed a yield of about 1,000 pounds of seed cotton per acre, while in the check fields the average was about 350 pounds of seed cotton per acre, and this in spite of the fact that the soil on the check area is much richer than that in the experimental area. The destruction of the plants in October has caused the poorer land to produce practically three times as much cotton as the richer land. The proper treatment of the fields in the experimental area resulted in an advantage to the farmers of $20 per acre.

The result is that by systematic fall destruction of cotton plants boll weevil damage can largely be averted, the reason being that by such destruction many millions of weevils in one stage or another are killed which otherwise would successfully pass the winter and infest the next year's crop.

OTHER COTTON BOLL WEEVIL WORK.

Extensive experimentation on the hibernation of the weevil was carried on; many laboratory observations and experiments were made; careful tests were made of all recommendations and suggestions that contained any element of probable success; the question of late planting versus early planting was again tested, with the

result of a perfect proof of the fallacy of the late-planting idea; and a machine was devised for the destruction of the insect in fallen squares which bids fair to be of considerable value. The northward and eastward spread of the weevil was carefully watched and predictions of damage were issued from time to time. The results published in June, 1907, indicated that the damage to be expected from the boll weevil during the year would be much less than normal. This prediction was verified by the later results.

The work in cooperation with the State experiment stations was continued. One man was detailed to the Texas Experiment Station and three to the Crop Pest Commission of Louisiana, which is virtually a part of the experiment station organization in that State.

WORK ON THE GIPSY MOTH AND THE BROWN-TAIL MOTH.

During the past fiscal year work against these two destructive insects in New England was taken up under a special appropriation by Congress. Headquarters were established in Boston; a skilled agent was placed in charge; a large force of laborers was engaged, and energetic work was begun as soon as the appropriation became available. Under the terms of the appropriation the work has been directed toward preventing the further spread of the gipsy moth and the brown-tail moth, and the work has been largely concentrated upon the gipsy moth, for the reason that it can more readily be handled and spreads much more slowly, owing to the fact that the female can not fly and the species spreads largely by the accidental carriage of the caterpillars on vehicles of different sorts and by pedestrians. The brown-tail moth flies readily and its range is much greater than that of the gipsy moth. It is easily destroyed in the winter time by the destruction of the winter nests, and an educational campaign in cooperation with the States of Maine, New Hampshire, Massachusetts, and Connecticut has been undertaken with a view of inducing property holders to accomplish the destruction of this species on their own grounds. With the gipsy moth the effort has been to destroy the insect along the main traveled roads for a distance of 100 feet or more back from the roads, thus preventing the caterpillars from spinning down from overhanging trees upon vehicles passing by. This work was started in the main centers of infestation, since these are the principal sources from which the insects are disseminated.

Such roads in 11 towns in the most thickly infested portions of Massachusetts have been cleared up, and at the present time conditions are vastly improved. In the meantime careful scouting has been carried on around the borders of the territory known to be infested, with the result that the gipsy moth has been found in many places in southern New Hampshire and at a large number of points

in southwestern Maine, where it was heretofore unknown to exist. The States above mentioned and the State of Rhode Island have passed laws and have appropriated comparatively small sums of money to be used in the fight against the gipsy moth and the brown-tail moth, and conditions are such in Maine, Rhode Island, and Connecticut that the object aimed at is the extermination of the insects. The fall scouting of 1907, so far as it has as yet developed the situation, seems to show that in Maine the insect has secured a much greater foothold than was formerly supposed, but nothing has thus far developed to render extermination impossible. In New Hampshire scouting work is now going on, and since all of the colonies of the gipsy moth so far found are in orchards or along roadsides, and not in the forests, it is not improbable that extermination may be accomplished in that State. The condition as a whole is encouraging, and it is quite possible that the gipsy moth will be prevented from any further dangerous spread and at the same time can be greatly reduced in numbers. In Rhode Island, for example, the past year's work has resulted in the destruction of 95 per cent of the insects.

INTRODUCTION OF BENEFICIAL INSECTS.

PARASITES OF THE GIPSY MOTH AND THE BROWN-TAIL MOTH.

The introduction of the parasites and predatory insect enemies of the gipsy moth and the brown-tail moth referred to in my last report has been continued with great success, and it is reasonably certain that the gipsy moth, as shown in the preceding paragraph, can be held in check by mechanical means until these imported natural enemies shall bring about a condition such as exists in Europe, where this insect only rarely appears in great numbers and then only for a single season.

In the early summer of 1907 the Chief of the Bureau of Entomology again visited parts of Europe, extending the range of his search for parasites into central and southern Russia, and by cooperation with European entomologists succeeded in introducing a much larger number than ever before of European parasites of the eggs and of the larvæ and pupæ of both the gipsy moth and the brown-tail moth. Two new species of primary parasites were introduced from Russia, and one of these proves to be a very rapid breeder and promises the best results.

These insects have been cared for in large indoor and outdoor breeding cages in the vicinity of Boston, and many thousands of specimens have been liberated in the open. There is abundant proof that several species have established themselves, and there is every reason to suppose that they will breed with greater or less rapidity. It is hoped that the results of the work of these parasites will be

evident by the summer of 1909, and there is a possibility that they may be evident in 1908.

The life histories and habits of these parasites are being studied by expert assistants in the laboratory near Boston, and careful observations at the same time are being made by agents of the Department in France and in Russia. Aside from the new species imported from Russia, the most encouraging feature of the year's importations is probably the abundance of parasites of the eggs of both the gipsy moth and the brown-tail moth that have been brought to America. Six generations of one species have been followed through during the past summer.

Altogether 35 species of these beneficial insects have been imported. Of these, 14 are hymenopterous parasites, 16 are dipterous parasites, and 5 are predatory beetles. There have been colonized in the open 9 species of hymenopterous parasites, 14 of dipterous parasites, and 2 of predatory beetles, making 25 species in all. Certain evidence of the practical acclimatization of a number of these forms has been gained.

OTHER IMPORTATIONS.

Aside from continued importations of several species of European ladybirds, which are effective enemies of plant lice and other soft-bodied insects, a systematic effort has been begun to import and acclimatize the European parasites of the codling moth. The State Board of Horticulture of California has already imported one parasite of this destructive insect and has it breeding in confinement at Sacramento, but the California organization has refused to distribute this parasite in other States except for large cash payments. The Department is therefore making the effort for the good of the whole country and will introduce not only a single parasitic species but as many as possible. Several hundred cocoons of the codling moth have already been received from different parts of Europe and are being cared for in the insectary of the Department at Washington.

What may prove to be an important egg parasite of the imported elm-leaf beetle has been discovered in France, and infested egg-masses have been sent to this country in the hope of establishing the parasite on this side of the ocean. This year's sendings were started too late, but in view of this experience it is hoped that next season this parasite may be brought over successfully.

THE SENDING OF USEFUL INSECTS ABROAD.

As indicated in previous reports, European officials have been so generous in their assistance to this country in these importations of beneficial insects that the Department has endeavored to return the

courtesy wherever possible. Continued sendings of scale-insect parasites have been made during the year to Italy with promise of success.

An interesting cooperative experiment was begun during the year with the French Government, and successful sendings of a predatory wasp from the Southern States to Algeria were made. On arrival in Algeria these wasps were cared for by agents of the Pasteur Institute of Paris, acting for the French colonial government, in the effort to establish a species which will destroy the gadfly, which carries a very destructive disease of the dromedary, so important in that country as a beast of burden.

FIELD-CROP INSECTS.

During the year the investigations of the Hessian fly and the different species of jointworms have been carried on, and work has been done with the so-called green bug which injures grain in the West in the early part of the season.

HESSIAN FLY INVESTIGATIONS.

The wheat-sowing experiments have been increased during the year, and are now being carried on in eleven States, over 800 different sowings having been under constant observation this year. Exact data are being continually accumulated, showing that it is possible to evade the most serious portion of the fall attack of the fly by seasonably late sowing in the fall, and exact dates under certain conditions for the different localities are being gradually established. These experiments, acting at the same time as demonstrations, are attracting much attention and are carefully watched by the farmers throughout the sections where the experiments are located.

An important branch of the Hessian fly work has demonstrated the possibility of the practical use of the parasites of the fly, and this is brought about by the careful study of the experimental sowings. A striking example has developed during the year. Early sown plats at Lansing, Mich., and Marion, Pa., were seriously attacked by the fly, but when examined at a later date fully 90 per cent of the flaxseeds were found to have been stung by a certain species of parasite and to contain its developing larvæ. At this time a field of wheat near Sharpsburg, Md., was found to be infested by the fly and examination indicated the absence of parasites. On April 8 some thousands of the parasitized flaxseeds from Pennsylvania were brought to Maryland and placed in the field. On July 8 an examination of the Maryland field showed that the parasites had developed so rapidly as to bring about an almost total destruction of the fly.

INVESTIGATIONS OF THE SO-CALLED GREEN BUG.

A destructive outbreak of this insect was carefully studied by several expert assistants. It began in Texas in January, and then consecutively in the States to the North, until it finally appeared across the Canadian border. Many remedies were tried, and a large-scale experiment was carried out in the carriage of early developing parasites from the South to more northern localities, liberating them in infested fields. Important results were obtained, and it was apparently shown that under the conditions under which the experiments were made this year there is little or nothing to be gained by such transportation of parasites, since they develop almost simultaneously in northern fields into which southern parasites have not been introduced. Further experimentation of this kind, however, must be carried out before exact conclusions can be announced.

JOINTWORMS AND OTHER GRAIN INSECTS.

Experimental work with the wheat jointworm and the timothy jointworm has been continued, and it has been shown that a proper rotation of crops will practically prevent damage by both insects. Further investigations have been made on the seed-corn ground beetle and the corn-root aphis and a number of other insects belonging to this group.

WHITE FLY INVESTIGATIONS.

By order of Congress, and under a special appropriation in response to strong demands from the Florida citrus-fruit growers, an investigation was begun on the white fly, an insect which does great damage to orange and lemon groves. A special agent with ample assistance was located in Florida, and life history studies have been made, experiments carried on in the introduction of parasitic insects, and in the encouragement of fungous diseases, and also in the control of the insect by the use of insecticides and gases. Much information of distinct value has resulted. Parasites of native insects of the same family have been brought from different parts of the country, and some results have been obtained which indicate that in the more humid portions of Florida the fungous diseases of the insect may be encouraged. The thorough investigation of the use of liquid sprays has progressed, and experiments in the use of hydrocyanic-acid gas indicate that under favorable conditions—that is, isolation from other infested groves, or where concerted action can be had—fumigation is much more economical than spraying and much more certain in its results than reliance on natural enemies.

INSECTS AFFECTING TOBACCO.

In the bill making appropriations for the Department for the present fiscal year a clause was inserted providing for investigation of insects injurious to tobacco in the dark tobacco belt of Tennessee and Kentucky. An expert assistant was sent to the region late in May, 1907, to make a preliminary examination of the field. Studies were made of the tobacco flea beetle, which seems to have been especially injurious this year, of cutworms, of plant lice, and of a few other species. Experimental plats at two important points were arranged for and cooperation with the Tennessee and Kentucky experiment stations was also arranged. A permanent special agent was placed in the region in question, and his work is now well under way.

INSECTS DAMAGING DECIDUOUS FRUIT TREES.

In addition to the continuation of investigations already in progress, an important new project has been taken up, namely, the study of the pear thrips and other deciduous fruit insects in portions of California. A station has been established at San Jose, an expert has been placed in charge, and the destructive pear thrips is being studied with the greatest care.

The plan of maintaining field stations in parts of the country devoted to the growing of deciduous fruits on a large scale has proved to be an excellent one, and in this way it has become possible to thoroughly study the insects being investigated under perfectly normal conditions and to conduct tests of remedies on a commercial scale. This work and the tests of insecticides is carried out according to a uniform plan, and thus shows variations in the life and habits of a given species in different parts of the country and what changes should be made in the use of remedies.

To the work in Pennsylvania has been added an investigation of the destructive grape rootworm. Demonstration spraying in the control of the codling moth and apple disease in cooperation with the Bureau of Plant Industry has been carried on at several points, and the work upon the plum curculio and the peach tree-borer, as well as that upon the San Jose scale, especially in the investigation of different washes, has been continued.

BEE CULTURE.

The chief problem taken up in this work was the investigation of the brood diseases of bees, and a bulletin on this subject was prepared and published. Careful bacteriological work has been done on these diseases and a number of obscure points have been cleared up.

Work on bee paralysis, a disease of adult bees, has been carried on by an agent in California. This is a most obscure disease, and no evidence of the influence of a micro-organism has as yet been found.

Distribution of breeding material of the various known races of bees has been carried on, and work on experimentation with honey-producing plants has also been continued.

An interesting series of tests has been begun as to the comparative value of the various races of bees in fertilizing red clover.

SILK CULTURE.

No changes have been made in the methods that have been followed for some years past in the effort to continue the production of silk in the United States. Eighty-five ounces of tested eggs were imported from Italy and distributed to 343 applicants in the spring. About 11,000 seedlings of the best white mulberry were also distributed. Cocoons were purchased from American growers at a rate varying from 90 cents to $1.15 per dry pound, and these cocoons were reeled at the Department. The reeled silk on hand was sold during the year at $4 a pound, bringing in a return of $1,012, which was deposited with the Treasury Department in compliance with the regulations.

INSECTS INJURIOUS TO VEGETABLE CROPS.

In the course of the year the investigations of insects of this class have been continued with a larger force than ever before, and some excellent results have been obtained. For example, in a series of cooperative investigations made between the Bureau and the Texas Agricultural Experiment Station on the melon aphis, great success has been obtained in the elaboration of remedial measures and in the demonstration of their efficiency. Especial attention has been paid to insects injurious to truck crops in the South, the region from which the early vegetables are sent to the northern markets.

Investigations of sugar-beet insects have been continued, and a full report upon the beet leaf-hopper, which has been very destructive in Utah and Idaho in recent years, is practically completed.

INSECTS INJURIOUS TO FORESTS.

In this direction very satisfactory progress has been made both in acquiring and diffusing information of practical value to the forest interests of the country. Especial work has been done upon insects that prevent forest reproduction, and those injurious to forest products, both crude and finished. Damage done by powder post beetles to finished hardwood material has been investigated with the result that successful methods of control have been ascertained. Studies have been made of beneficial forest insects looking toward their prac-

tical utilization. The studies of the damage by bark beetles to coniferous trees have been continued, and recommendations of the Bureau have been adopted with excellent results.

INSECTS WHICH CARRY DISEASE TO MAN AND DOMESTIC ANIMALS.

The work of the Bureau on the subject of mosquitoes has been continued, and a complete account of the mosquitoes of North America, including some consideration of their relations to disease, is nearly finished.

The investigation of the life history of the Texas cattle tick and other injurious ticks which may be concerned in the transmission of disease has been continued in cooperation with different State entomologists, and many important points having a direct bearing upon methods of control have been ascertained. A true parasite of one of the ticks has been found which offers hope that natural methods of decreasing the abundance of ticks may yet be learned.

OTHER INVESTIGATIONS.

Elaborate work on the destructive group of scale insects has been carried on through the year. Insects injurious to stored products have been further studied. Elaborate tests of different insecticides have been made, and radical inspections have been made of all of the plant material introduced by the Department and sent out, so that the danger of spreading insect pests in this way is practically removed. Investigations of the insects affecting the pecan in the South have been begun.

BUREAU OF BIOLOGICAL SURVEY.

Practically all the investigations under way in the Bureau of Biological Survey at the time of the presentation of my last report have been continued and additional and important lines of work have been begun.

ECONOMIC VALUE OF BIRDS.

The education of the public as to the value of birds generally and the part they play in the economy of nature is felt to be an important part of the duties of the Survey. School children especially need enlightenment, both as to the value of birds and as to the duty of the citizen toward them. During the last year circulars have been issued with this important educational end in view.

ECONOMIC INVESTIGATIONS.

THE BOLL WEEVIL.

Work in relation to the ravages of the boll weevil was continued in Texas and Louisiana with gratifying results. Several additional birds were found to feed on the weevil, bringing the number of species

now known to prey on it up to 43. A report detailing the results of the season's observations has been published, and it is hoped that its wide dissemination in the cotton States will have two important results: (1) The enactment of necessary protective legislation for several species of birds not now protected; (2) the enlightenment of all classes of citizens in the cotton States as to the important part certain birds play in limiting the ravages of the pest, and also the enlistment of their cooperation in protecting and in increasing the numbers of the birds that destroy the weevil. That the latter is entirely practicable can not be doubted, at least in the case of swallows, which are among the most persistent enemies of the weevil. While these useful birds are under protection of law in the Southern States as elsewhere, it has been ascertained that in certain districts their nests are broken up and the birds driven away or destroyed, under the mistaken idea that they harbor insects obnoxious to man. Such is not the case, and it is believed that if wide publicity is given to the facts the birds, instead of being persecuted, will be encouraged, as they should be, to build in every available site. A substantial increase of numbers would enable them to wage more effective war against many injurious insects, including the worst offender of all, the boll weevil.

BIRDS IN RELATION TO FRUIT RAISING.

For several years work has been conducted in the fruit regions of California to determine the exact status of birds in their relation to this great and growing industry. The vicinity of orchards is known to be a favorite home of birds, but by no means all the birds that nest in and about orchards are attracted by the fruit. On the contrary, numerous species choose orchards as their home, or as their hunting grounds, because of the multitude of insects which infest fruit and fruit trees. Careful examinations of the stomachs of orchard birds show that by the destruction of injurious insects most of the birds that eat fruit more than compensate for the damage they do. The moderate amount of fruit consumed by such species may properly be looked upon as pay for services rendered, and it may be added that the service is cheaply bought. In the case of certain species which are harmful to the fruit growers' interests remedial methods are suggested.

SCALE-EATING BIRDS.

Special investigations have been made to determine the extent to which birds prey on scale insects. These dangerous pests are so small and so sedentary that they have been generally supposed to be overlooked by birds. Such proves to be by no means the case, and no fewer than 57 species of birds have been ascertained to feed on scales. Moreover, certain birds, the grosbeak, for instance, appears to have a special fondness for them and to hunt them assiduously.

TRAFFIC IN CAGE BIRDS.

The fact that 300,000 cage birds are yearly imported into this country and that the number is constantly increasing will surprise many. By far the greater number of these importations are canaries, or other cage birds. There seems to be no reason why most if not all the cage birds required in this country should not be raised here. The industry is very profitable in Germany and elsewhere abroad, where it is carried on, not in a wholesale way, but by the women and children of individual families who, with comparatively little labor and trouble, add an interesting occupation to their ordinary household duties and secure satisfactory returns in cash. The mountain regions of the Southern States, particularly, would seem to furnish almost ideal conditions for such an industry, which, besides being lucrative, possesses the added advantage of substituting domestic birds for such wild species as the mocking bird, cardinal, and nonpareil, whose value to agriculture is too great to make it desirable to confine them in cages.

DUCKS AND SHORE BIRDS.

In the past one of the important food sources of the United States was its game, particularly its ducks, geese, and shore birds, thousands of which found their way to the markets of all our large cities to be used for food by rich and poor. Unfortunately the natural supply of these birds was not wisely husbanded with an eye to the future, but, as in the case of the buffalo and wild pigeon, was mercilessly pursued till at the present time not a few species are threatened with speedy extinction. The subject is important, and it is obvious that if the more desirable species of ducks and geese are to be preserved for the future, additional legislation is needed. The essential data to serve as a basis for legislative action are a knowledge of the food supply and of the pairing times of the several species of ducks, geese, and waders; and of the routes they pursue in migration. These subjects are now being carefully investigated.

ECONOMIC MAMMALOGY.

The problems connected with this branch of the work are many and important. While in some sections of the country the devices employed to reduce the number of noxious mammals, especially the smaller rodents, have proved successful, in many others the reverse is the case. Traps, poisons, and gases, when intelligently employed, are efficient, but they often stop short of serving the desired end owing to want of cooperation. They must be used at the proper seasons, must be employed persistently, and, to secure the best results, should be employed simultaneously by all the farmers over a wide extent of country. In many regions, unfortunately, cultivated areas

alternate with strips of wild and unimproved land, so that the latter form nurseries from which adjoining farms are populated anew after the number of rodents has been reduced to harmless proportions, Thus warfare against mammals is ceaseless and expensive and constitutes a heavy tax upon agriculture.

It is with a view to the discovery of more effective and cheaper methods of destroying rodents that experiments with contagious diseases have been continued in cooperation with the Bureau of Animal Industry. A very important field for this work is among the small ground squirrels of the Northwest, where these animals annually destroy vast quantities of grain. Laboratory experiments have yielded promising results, and work along this line will be continued with the hope of securing a virus which can be utilized in reducing the number of rodent pests throughout the affected area.

THE RABBIT PEST.

Complaints of damages to orchards and various other crops by rabbits continue to be received. Experiments were continued during the past year with a view to the discovery of a protective wash for fruit trees, and excellent results were obtained with the lime-and-sulphur wash, well known as a remedy for the San Jose scale. The wash can be made in quantities very cheaply, and it seems to protect fruit and other trees perfectly from the attacks of both rabbits and mice. It is also durable in effects, one liberal application lasting all winter. Should further experiments confirm the efficacy of this wash as a protection for trees against the attacks of small rodents, an important problem will have been solved, as the annual destruction of orchard trees by rabbits and mice reaches large proportions.

HOUSE RATS.

No one of our wild mammals, possibly not all combined, does so much damage as the common rat. Many experiments have been made to discover satisfactory methods of checking the depredations of these animals and of reducing their numbers. A bulletin setting forth the most approved methods known was issued during the year with the expectation that it will materially aid in the protection of property from the attacks of these pests. Meanwhile experiments with bacterial diseases are being continued for the purpose of discovering a safe and effective virus, fatal to these rodents and yet harmless to domesticated animals.

FIELD MICE.

Though small, field mice are so generally distributed over the United States and so numerous in certain regions that they often do great damage in gardens, meadows, nurseries, and orchards, where

they attack fruit trees and crops. Alfalfa is particularly relished by these rodents, and, as it is very nutritious, when once they have invaded a patch they increase enormously. As in summer they attack the foliage and in winter the roots, if unchecked they soon destroy whole fields and render fresh planting necessary. They thus possess considerable economic importance. A careful study has been made of their habits and such methods of prevention suggested as have been found most efficacious are set forth in a bulletin which is now being widely distributed.

WOLVES.

Methods of destroying wolves that prey upon stock on the western ranges have been carefully studied and two reports on the subject were issued last year—one, in cooperation with the Forest Service, in relation to the destruction of stock on the western ranges; the other in connection with the destruction of deer in Michigan and Wisconsin. The adoption by stockmen of the methods recommended—especially killing the young in the breeding dens—has already resulted in a material reduction in the number of wolves and a corresponding saving of stock and game.

GEOGRAPHIC DISTRIBUTION—LIFE ZONES AND CROP ZONES.

The essential purpose of this work is to furnish the practical farmer a guide to the crops best fitted for any given area. From a study of our native fauna and flora it has been found that the country is divided into zones or belts, each characterized by certain conditions of temperature and by the presence of particular species of mammals, birds, reptiles, and plants. Each of these primary life belts covers an extensive transcontinental area, which in turn is subdivided into minor areas. It has been found that crops adapted to one part of an area thrive under similar conditions in other parts and will not thrive in areas having materially different conditions. By means of this knowledge, in connection with the zone maps, a vast deal of costly experimentation is saved. Life-zone maps of the several States are now in course of preparation, to be followed by lists of crops and fruits best adapted for cultivation in the different areas. The great demand for the generalized map and report already published and for the more detailed maps not yet finished is an earnest of the practical importance of this work.

Field work in several States, as California, Colorado, and New Mexico, is now being carried on with a view to early publication of results. Considerable work has been done in other States, and it is hoped that sufficient funds will be forthcoming to permit this work to be completed as rapidly as possible, especially in the States where large irrigation projects are expected to make available immense tracts of hitherto nonagricultural land.

GAME PROTECTION AND INTRODUCTION.

ENTRY OF FOREIGN BIRDS AND MAMMALS.

The act of Congress of May 25, 1900, prohibiting the entry into the United States of the mongoose, English sparrow, flying fox, and starling has now become so well known that for the past two years none of these pests has been offered for entry, nor has constant vigilance disclosed any attempt to introduce them surreptitiously.

The importance of a check upon the possible introduction of pests into the United States grows with the growth of the trade in cage birds, which is increasing very rapidly. During the year, besides 708 mammals, 408,532 birds were imported under permit, an increase of 27 per cent over those of the preceding year and 51 per cent over those imported in the year ending June 30, 1905. Of this large number, 351,407 were canaries. Nearly all were entered at New York and Philadelphia, and all but a comparatively small number were subjected to careful inspection by the Department's representatives at those ports. In addition to its value as a means of preventing the introduction of injurious species, the service presents features of more than ordinary interest in revealing the extent and character of a trade concerning which little has been generally known.

Its usefulness further appears in the fact that it keeps the Department informed of the importation of foreign game birds for the purpose of stocking American covers. Our own game birds are constantly diminishing in abundance, and the practice of introducing foreign birds as a substitute grows in favor. Many species, serving both for food and sport, have already been more or less firmly established in various parts of the country. During the year Illinois imported more than 1,000 European partridges, and Kansas imported about 2,000 English pheasants. Capercailzie and black game of northern Europe, the former of which is nearly as large as wild turkey, have been imported successfully for liberation at various points, notably on Grand Island, Michigan, and in the Algonquin Park, Ontario.

The experiment of stocking covers by means of imported eggs of game birds also is apparently meeting with favor. Under the act of June 7, 1902, every such consignment requires a permit from the Department. More than 5,900 eggs were imported during the year. In number this was but a slight increase over those brought in in 1906, but the fact that they were imported in 39 different consignments, as against 5 in the preceding year, shows a much more widespread interest.

INTERSTATE COMMERCE IN GAME.

The most important feature in the suppression of illegal interstate commerce in game was the arrest of two noted tusk hunters, and the confiscation of a large quantity of hides, horns, and teeth of elk they

had secured in the Yellowstone Park and vicinity. The men involved in this particular transaction were tried for a violation of the Lacey Act in shipping their plunder from Idaho to California. They pleaded guilty and were promptly fined $200, the minimum penalty under the Lacey Act. It is greatly to be regretted that the demand for the heads, horns, and especially the tusks of elk, should threaten the extinction within our territory of this noble game animal, and every effort should be made by National and State authorities to protect the few remaining head. The high price paid for trophies, especially the teeth, is an incentive to pursue the animals. The practice of hunting elk has been conducted with disregard of the Federal and State laws, and has been very destructive.

Attention is called again to the importance of additional supervisors to be stationed at central points to represent the Department in its efforts to abolish unlawful interstate commerce in game. It is impossible for the Department to secure adequate enforcement of the Lacey Act without increase of its force. Local conditions must be studied, evidence must be secured, and it is often essential, as with other branches of the Government service, that the Department be represented at the trials of important offenders. The cost of such additional force would be slight and the benefit very great.

BIRD RESERVATIONS.

No new reservations were established during the year, but the seven already created were maintained under careful supervision. Some poaching was reported by the warden of Stump Lake Reservation, in North Dakota, but as three of the poachers were arrested, promptly convicted, and fined $25 each, the example will probably have a deterrent influence.

PUBLICATION OF INFORMATION CONCERNING GAME.

One of the most serviceable duties of the section of game preservation consists of informing the public of existing laws relating to protection and hunting of game and special features connected therewith. Within the last twenty years game laws have become so numerous and complicated, as compared with the simple provisions of former times, that it is exceedingly difficult, without some such central source of information, for the sportsman or dealer in game to acquaint himself with the various requirements of State laws. Such information not only interests and benefits the general public, but frequently serves as a basis for State legislation. Perhaps the most important publication prepared by this office during the year was one treating of the methods and machinery employed in the enforcement of game laws.

PRESERVATION OF GAME IN ALASKA.

During the last session of Congress a bill was introduced placing the duty of issuing permits for the export of trophies and specimens from Alaska with the governor of the Territory, instead of with the Department, and providing for the issue of licenses. The bill, however, failed of passage, and for the present the Department will continue its conservative policy in regard to the issue of export permits. I am impelled to renew my recommendation that Congress relieve the Department of the duty of enforcing the Alaska game law. The present law is unsatisfactory, both to the residents of Alaska and to this Department.

COOPERATIVE WORK.

Much attention is given to cooperative work, chiefly in connection with the establishment and maintenance of efficient game and bird protection in the various States. Special aid was given to Alabama, California, Connecticut, Delaware, New Jersey, New York, Pennsylvania, Tennessee, Texas, Vermont, Virginia, and Wisconsin. Requests for such aid are of increasing frequency, but are complied with so far as possible. They involve chiefly explanations to legislatures, or legislative committees, of certain special features of game protection, and of assistance in cases arising from violations of game laws.

DIVISION OF ACCOUNTS AND DISBURSEMENTS.

To appreciate properly the present importance of this Division and the rapidity with which its responsibilities are increasing it is only necessary to consider the growth of the Department as a whole, as shown by the appropriations for agricultural investigations and related purposes since its inception in 1839. In that year $1,000 was set aside by Congress " for the purpose of collecting and distributing seeds, prosecuting agricultural investigations, and procuring agricultural statistics." In 1849 the appropriation had increased to $3,500 and in 1859 to $60,000. In 1862 the importance and value of the work, until then prosecuted under the direction of the Commissioner of Patents, had secured such recognition that a department headed by an independent Commissioner was created for its continuance. In 1869 the agricultural appropriation amounted to $172,593, in 1879 to $206,400, and in 1889 to $1,034,480, by which time the administration of the financial affairs of the Department had developed such importance that a separate division became necessary to insure proper disbursement of the funds set aside by Congress for the needs of the Department. In 1899 the annual appropriation had increased to $2,829,702, but during the past ten years the growth of the Department has been rapid and the benefits to the public have increased correspondingly. The regular appropriation bills of the Department

for ordinary and routine expenses from 1903 to 1908, inclusive, show an average annual percentage of increase of 12.9.

The amount estimated for the fiscal year ending June 30, 1909, in the regular appropriation bill is $10,666,351, which includes $720,000 for agricultural experiment stations. This is an apparent increase of $1,459,061, or 15.8 per cent; but, taking into consideration the loss of revenues derived by the Forest Service from the sales of timber, etc. (estimated at $1,500,000 annually), which heretofore have been used for maintenance of the reserves, but which, beginning on July 1, 1908, are required by law to be deposited in the Treasury to miscellaneous receipts, it is in reality no increase. In addition there will be a permanent appropriation of $3,000,000 for meat inspection, and an item of $550,000 in the sundry civil bill for printing and binding for this Department, to be done under the Public Printer, making a grand total of $14,216,351.

The proper disbursement of the great sums now being appropriated annually for the use of the Department at the present time involves the careful scrutiny, administrative examination, and audit of more than 50,000 accounts annually and the issue of about 75,000 checks. This duty, which is performed by the Division of Accounts and Disbursements, insures a conformity of the expenditures to the requirements of the appropriation acts and the regulations of the Treasury Department, in addition to which absolute economy of disbursement is secured by the departmental system of project filing which was developed over two years ago for the purpose of insuring judicious and careful expenditure and of rendering any duplication of work in the several bureaus absolutely impossible. In the operation of this system each chief of Bureau files a detailed statement every six months regarding each project in operation or contemplated in his particular Bureau. With these statements before him, the head of the Department is enabled to coordinate and direct the work of the several Bureaus to the greatest possible advantage. Over 1,300 projects are on file, and no new projects are embarked upon without being first brought to the attention of the head of the Department in the manner described. It may be remarked in this connection that the system of project filing here outlined is peculiar to and entirely original with the Department of Agriculture.

During the fiscal year ending June 30, 1907, the Congressional Committee on Expenditures in the Department of Agriculture carefully investigated the expenditures for the preceding fiscal year. In the course of this investigation all the higher officials of the Department appeared before the committee and under oath explained in detail the character and object of the various lines of work being prosecuted by the Department. It is gratifying to state that as a result of the examination every penny of the agricultural appropriations

was properly accounted for, the work and discipline of the Department received high commendation, and it was shown that the annual value of the Department of Agriculture to the general public at the present time is nearly a quarter of a billion dollars. As the annual appropriation for the Department is about $14,000,000, it will be seen that this is a return of about $16.50 for every dollar appropriated by Congress.

For the prosecution of the various activities of the Department of Agriculture during the year ending June 30, 1907, including the permanent appropriation of $3,000,000 for meat inspection and other special appropriations, Congress appropriated the sum of $11,557,691.36, this amount being $4,382,001.36 in excess of that similarly appropriated for the preceding year. The disbursements of the Department during the fiscal year 1907 amounted to $8,586,209.23, and the greater part of the balance of $2,971,482.13 will be required for the settlement of outstanding liabilities.

The amount paid for rent of buildings in the District of Columbia in the several branches of the Department was $50,148.96.

All accounts for the fiscal year 1905 having been settled, the unexpended balance of appropriations for that year, amounting to $74,336, was covered into the Treasury on June 30, 1907. The account for the fiscal year 1906 is still open.

DIVISION OF PUBLICATIONS.

The results of the investigations conducted by the Department are made known and become available for the use of the people by means of publications, of which 1,415 were issued during the year, 596 being new and 819 reprints. These publications comprised 52,363 printed pages and the total number of copies aggregated 16,746,910, an increase of 3,258,889 copies over last year.

The publication work of the Department has assumed such magnitude that only by the most careful editorial supervision and by the enforcement of the most rigid economy in the printing and by the exercise of constant discretion in the distribution of the documents has it been possible to accomplish the results attained with the present appropriation. It has become absolutely necessary to reduce the editions of the scientific and technical publications to sufficient numbers to supply only restricted lists of cooperators, educational institutions, experiment stations, and libraries, and to refer miscellaneous applicants to the Superintendent of Documents, who, under a wise provision of law, is authorized to reprint our publications and sell the same at a nominal price so long as there is a demand for them. The fact that last year 71,764 copies of various publications of this Department were sold at an aggregate price of $10,885.20 is indisputable evidence of the willingness of applicants to purchase publi-

cations in which they are interested and thus to contribute toward the support of the publication work of the Department. If the publications could be placed on sale at the post-offices throughout the United States, and thus made easily procurable, I feel confident that the people would buy them. In this way the wide dissemination of the practical information they contain would be insured, which is not possible under the system now in vogue and with the funds available for printing and binding.

FARMERS' BULLETINS.

Farmers' Bulletins continue to be the most popular publications of the Department. Forty-two new bulletins were issued during the year, the number of copies printed being 1,100,000, while 443 reprints of bulletins were made in editions aggregating 5,369,000, the total number of Farmers' Bulletins printed in the year being 6,439,000 copies, of which 3,484,713 were distributed upon the order of Senators, Representatives, and Delegates in Congress. The fund appropriated for the preparation and printing of these bulletins remains at $98,750, which is inadequate to print the number required, and I have asked for $125,000 for next year, with the view to increasing the number allotted to each Senator, Representative, and Delegate in Congress to 15,000 copies and to enable the Department to supply the increasing demand for these publications. The total number of Farmers' Bulletins printed and distributed since the series was created in 1889 is 55,125,000, of which 37,400,161 have been distributed by Members of Congress.

It would be difficult to estimate the increased value of the crops of this country resulting from the adoption of the improved methods of farming described in these bulletins, which have been distributed in such large numbers to every section of the United States.

PUBLICATIONS SPECIFICALLY AUTHORIZED BY LAW.

There are nine publications of this Department the annual printing of which is specifically authorized by law. Under the provisions of Joint Resolution No. 14, approved March 30, 1906, it is permissible to order any part of the edition instead of the total number of copies specified. The Department has availed itself of this provision, and instead of printing the greatest number allowable, which was 68,000 copies, only 46,100 were ordered, thus effecting a saving of $15,000.

WEIGHING THE MAIL.

In accordance with a provision of the act making appropriations for the Post-Office Department for the fiscal year ending June 30, 1907, the Division of Publications weighed carefully the mail for-

warded through the post-office under penalty envelopes during the first half of the fiscal year, the results of which are interesting, inasmuch as the principal distribution of the publications of the Department is made through this Division. The record shows that during that period 3,698,725 packages, weighing 622,988 pounds, which would require at ordinary postage rates $66,450 to provide stamps, were delivered to the city post-office. An accurate account of the entire year's distribution can not be obtained by doubling these figures, as the demands for the Department's publications during the last half of the calendar year are not so great as during the winter and spring months. Therefore it is a fair estimate to place the weight of the domestic mail forwarded by the Division of Publications at more than 1,500,000 pounds. In addition, there were mailed to foreign countries, prepaid by postage, 44,426 packages, weighing 14,426 pounds 13 ounces, at a total cost for postage of $1,474.98; and 134 packages, weighing 508 pounds 4 ounces, were forwarded through the Bureau of International Exchange, Smithsonian Institution, as the weight of each package was in excess of the limitations imposed by the foreign countries to which they were mailed. Furthermore, there were forwarded to the Dominion of Canada, Mexico, and Cuba, under the frank, 15,909 packages, weighing 3,972 pounds. Many of the publications thus forwarded were sent by registered mail. A card index is kept of the distribution of the more important bulletins and reports, and a careful record is kept of every publication distributed, the Division of Publications being charged with this distribution under the provisions of the act of January 12, 1895.

TO FACILITATE THE REPRINTING OF OUR PUBLICATIONS BY THE AGRICULTURAL EXPERIMENT STATIONS.

There is a growing desire on the part of the agricultural experiment stations to distribute publications of this Department, especially those that relate to subjects in the investigation of which there has been cooperative work. Unfortunately the Department fund is insufficient to permit the printing of the copies desired for distribution by the stations. I strongly recommend some modification of the law of January 12, 1895, relating to the public printing and binding, which would authorize the Public Printer to sell at reasonable prices to the directors of the agricultural experiment stations electrotype plates of the publications of the Department. This would enable the stations to reprint at small expense any publication of this Department, thus insuring a wider dissemination of the information contained in our publications than is possible with the present appropriation for printing.

BUREAU OF STATISTICS.

GROWTH AND DEVELOPMENT OF CROP STATISTICS.

The first provision for the collection of agricultural statistics by the Department of Agriculture was made by Congress in 1863. At that time the United States was entering upon a period of rapid development of agricultural and commercial resources, and there was felt by different branches of business a necessity for the collection and dissemination of additional information regarding the crops of the country.

The requirements of foreign markets brings about dependence upon the United States for agricultural products. To meet these demands at home and abroad is the province of American agriculture. The manufacturer, the merchant, the skilled operative in the factory, to as great an extent as the farmer, feels deeply interested in the reports of the condition and progress of an agriculture upon which all are dependent.

Statistical information concerning crop production and live stock that is collected by the slow and exact methods of a census is generally not given to the public until after the crops enumerated are harvested and marketed and the immediate interest in it has passed away. Price movements of agricultural products are primarily governed by the law of supply and demand, and so a knowledge as early as practicable of the supply is essential. Those who produce and those who consume have interests as well as the dealer who operates between them. The mutual interests of agriculture, manufacture, and commerce demand that there should be published at brief intervals during the crop season reliable information on the condition, acreage, production, and value of the principal crops.

The life of commerce being the exchange of the products of agriculture and manufacture among producers and consumers, commerce prospers in proportion as the farmer prospers and the operative thrives. Some individuals, however, do not regard the common welfare, and injurious speculations occur when ignorance of the condition of our crops prevails. At such times the farmer does not obtain just prices, the consumer is not benefited, and business is injuriously affected. The consequences of false reports concerning the prospective yield or condition of the cotton crop alone might be very injurious. If there were no adequate Government crop-reporting service and the cotton crop should receive the full force of the reports of harmful speculators, for every cent per pound that prices were unfairly depressed the growers would lose 60 million dollars or more; if the prices were improperly increased, the manufacturers and allied interests would be affected to a proportionate degree. All interests, therefore, demand that the true condition of crops should be made known promptly.

It was to remedy these evils and to subserve and protect the interests above noted that Congress has provided for issuing monthly crop reports. From an allotment of a few thousand dollars each year the crop-reporting service has been evolved, perfected, and enlarged into the Bureau of Statistics. The total cost of such service from its beginning down to date has been about 3½ million dollars.

The first enactment authorizing the collection of agricultural statistics by the Department of Agriculture was the act establishing the Department, passed May 15, 1862, "the general design and duties of which shall be to acquire and to diffuse among the people of the United States information on subjects connected with agriculture, in the most general and comprehensive sense of that word."

METHODS OF CROP REPORTING.

The general plan of the crop-reporting service has not undergone material changes during the past year. Efforts have been devoted to perfecting and improving many details of the organization.

The Bureau of Statistics issues each month detailed reports relating to agricultural conditions throughout the United States, the data upon which these facts are based being obtained through a special field service, a corps of State statistical agents, and a large body of voluntary correspondents composed of the following classes: County correspondents, township correspondents, individual farmers, and special cotton correspondents.

The special field service is composed of seventeen traveling agents, who are especially qualified by statistical training and practical knowledge of crops, each assigned to report for a given group of States. They systematically travel over the districts assigned to them, carefully noting the development of each crop, keeping in touch with best-informed opinion, and reporting monthly and at such other times as are required.

There are forty-five State statistical agents, each located in a different State. Each of these reports for his State as a unit, and maintains a corps of correspondents entirely independent of those reporting directly to the Department at Washington. These State statistical correspondents report each month direct to the State agent on schedules furnished them. These are then tabulated and weighted according to the relative product or area of the given crop in each county represented, and summarized by the State agent, who coordinates and analyzes them in the light of knowledge of conditions derived from personal observation and other sources, and prepares his monthly and other written and telegraphic reports to the Department.

There are approximately 2,800 counties of agricultural importance in the United States. In each of these counties the Department has a principal county correspondent, who maintains an organization of

several assistants. These county correspondents are selected with special reference to their qualifications, and constitute an efficient branch of the crop-reporting service. They make the county the geographical unit of their reports, and, after obtaining data each month from their assistants and supplementing these with information obtained from their own observation and knowledge, report directly to the Department at Washington.

In the township and voting precincts of the United States in which farming operations are extensively carried on the Department has township correspondents who make the township or precinct the basis of reports, which they also send to the Bureau of Statistics each month.

Finally, at the end of the growing season a large number of individual farmers and planters report on the results of their own individual farming operations during the year, and valuable data are also secured from 30,000 mills and elevators.

With regard to cotton, all the information secured from the foregoing sources is supplemented by that furnished by special cotton correspondents, embracing a large number of persons intimately concerned in the cotton industry, and, in addition, inquiries in relation to acreage and yield per acre of cotton are addressed to the list of cotton ginners through the courtesy of the Bureau of the Census.

SCOPE OF CROP REPORTS.

Eleven monthly crop reports on the principal crops are received yearly from each of the special field agents, county correspondents, State statistical agents, and township correspondents, and one report relating to the acreage and production of general crops is received during the year from individual farmers.

Six special cotton reports are received during the growing season from the special field agents, from the county correspondents, from the State statistical agents, and from township correspondents, and the first and last of these reports are supplemented by returns from individual farmers, special correspondents, and cotton ginners.

TRANSMISSION OF REPORTS TO BUREAU BY CORRESPONDENTS.

Previous to the preparation and issuance of the Bureau's reports each month, the several classes of correspondents send their reports separately and independently to the Department at Washington.

In order to prevent any possible access to reports which relate to speculative crops, and to render it absolutely impossible for premature information to be derived from them, all of the reports from the State statistical agents, as well as those of the special field agents relating thereto, are sent to the Secretary of Agriculture. By an

agreement with the postal authorities these envelopes are delivered to the Secretary of Agriculture in sealed mail pouches. These pouches are opened only by the Secretary or Assistant Secretary, and the reports, with seals unbroken, immediately placed in the safe in the Secretary's office, where they remain sealed and guarded until the morning of the day on which the reports are issued, when they are delivered to the Statistician by the Secretary or the Assistant Secretary. Reports from special field agents and State statistical agents residing at points more than 500 miles from Washington are sent by telegraph in cipher. Those in regard to speculative crops are addressed to the Secretary of Agriculture, by whom they are placed in the safe in his office.

Reports from the State statistical agents and special field service in relation to nonspeculative crops are sent to the Bureau of Statistics and are kept securely in a safe until the data contained in them are used by the Statistician in compiling estimates regarding the crops to which they relate. The reports from the county correspondents, township correspondents, and other voluntary agents are sent to the Chief of the Bureau of Statistics by mail in sealed envelopes.

PREPARATION OF REPORTS.

The plan of placing the final preparation of the reports in a crop-reporting board has been continued during the past year, and after two full years of trial it has been demonstrated that it is a satisfactory method. It relieves one man of the strain and responsibility and secures the benefits of consultation and the consensus of judgment of men who have been on the ground.

The crop-reporting board is composed of the Chief of the Bureau as chairman and four other members whose services are brought into requisition each crop-reporting day from among the statisticians and officials of the Bureau and the special field and State statistical agents who are called to Washington for the purpose.

The personnel of the board is changed each month. The meetings are held in the office of the Statistician, which is kept locked during its session, no one being allowed to enter or leave the room or the Bureau, telephones being disconnected.

When the board has assembled, reports and telegrams regarding speculative crops from State and field agents, which have been placed unopened in a safe in the office of the Secretary of Agriculture, are delivered by the Secretary, opened, and tabulated, and the reports, by States, from the several classes of correspondents and agents relating to all crops dealt with are brought together in convenient parallel columns on final tabulation slips. The board is thus provided with several separate estimates covering each State and each separate

crop, made independently by the respective classes of correspondents and agents of the Bureau, each reporting for a territory or geographical unit with which he is thoroughly familiar.

Abstracts of the weather condition reports in relation to the different crops, by States, are also prepared from the weekly bulletins of the Weather Bureau. With all these data before the board, each individual member computes independently, on a separate sheet or final computation slip, his own estimate of the acreage, condition, or yield of each crop, or of the number, condition, etc., of farm animals for each State separately. These results are then compared and discussed by the board under the supervision of the chairman, and the final figures for each State are decided upon. It has been interesting to note how often the reports of the different classes of correspondents and agents are very nearly identical, and how closely the figures arrived at independently by the individual members of the board agree. The estimates by States as finally determined by the board are weighted by the acreage figures for the respective States, the result for the United States being a true weighted average for each subject.

There have been 18 meetings of the crop-reporting board during the past year, in most of which the personnel has been changed each month. Six special field agents, specialists in their respective lines of statistical and crop knowledge, and eight State statistical agents have served in the different board meetings. Most of these men are widely known throughout the United States, and the practice of having them take part in the preparation of the monthly crop reports and estimates has proved highly satisfactory, and has been a great factor in establishing the confidence of the public generally throughout the country in the fairness and correctness of the Bureau's estimates.

In 1905 comprehensive and stringent orders governing the preparation of the crop reports were promulgated. They have been found to secure expedition and safety in the computations, and have satisfactorily safeguarded the reports. Such orders have been revised to date and are strictly adhered to in every detail.

METHOD OF ISSUING REPORTS.

Reports in relation to cotton, after being prepared by the crop-reporting board and personally approved by the Secretary of Agriculture, are issued on the 2d or 3d of each month during the growing season, and reports relating to the principal farm crops and live stock are prepared and made public on the 9th or 10th day of each month. In order that the information contained in these reports may be made available simultaneously throughout the United States, they are handed, at an announced hour on report days, to all applicants and to the telegraph companies. These companies have re-

served their lines at the designated time, and forward immediately the figures of most interest. A mimeograph or multigraph statement, also containing such estimates of condition or actual production, together with the corresponding estimates of former years for comparative purposes, is prepared and sent immediately to a mailing list of exchanges, newspaper publications, and individuals. The same afternoon printed cards containing the essential facts concerning the most important crops of the report are mailed to the 77,000 post-offices throughout the United States for public display, thus placing the most valuable information within the farmers' immediate reach.

STATE STATISTICAL AGENTS.

Particular efforts have been made during the year to improve and perfect this important class of correspondents, and special care has been exercised in the selection and appointment of new agents where vacancies have occurred from death and resignations. Only men possessing proper qualifications and fitness have been selected, and then only after careful investigation by representatives of the Department. Many of the State agents have been visited and their offices inspected by officials of the Bureau during the year, and it is gratifying to note that their methods of securing data and compiling their reports have been brought to a scientific and uniform basis.

The appropriations of this Bureau were somewhat increased last year, and one of the principal reasons was to enable the State statistical agents to travel within and throughout their respective States for the purpose of making personal investigations of crop conditions, and of meeting their correspondents or aids, and enlisting the services of new ones. About $5,000 was allotted for this purpose during the year, and the State agents were directed to travel in the spring at the time inquiries are made as to the acreage of the principal crops, and also in the fall or near the time of harvest, when inquiries are made as to the yield and production. Excellent reports have been received from the different agents as to the great assistance and advantage of this travel, and it is felt that such benefits have been reflected in improved and more accurate reports from such agents.

SPECIAL FIELD AGENTS.

By means of a slight increase in the appropriation of this Bureau the corps of field and traveling agents was increased by the appointment of two additional men, and the territories of several of the agents have been redistributed and reassigned, so that the entire country is now better covered and represented by this class of reporters. The number of agents has been increased to 17; the principal cotton-producing States are now covered by 6 agents, while 8 others are as-

signed to the remaining territory of the United States, including the principal wheat and corn producing States, and 3 others are principally engaged in collecting statistics throughout the United States in regard to such crops as tobacco and rice.

INTERNATIONAL TRADE AND PRODUCTION STATISTICS.

Renewed efforts were made during the year to enlarge the statistical information of the Yearbook concerning international trade in agricultural products and concerning the agricultural production of all of the countries of the world for which information is obtainable. International trade tables are now compiled and published for corn, wheat, wheat flour, and for wheat and wheat flour combined in terms of bushels of wheat; for cotton, unmanufactured tobacco, hops, rice, sugar, tea, coffee, oil cake and oil-cake meal; for rosin, spirits of turpentine, india rubber, wood pulp, wool, hides and skins, butter, cheese, live meat animals, and packing-house products. There are twenty-two commodities for which tables of the international trade of most of the countries of the world are prepared.

The statement of the agricultural production of all countries ascertainable has been enlarged by the inclusion of several products heretofore omitted, and the full list of these products now embraces fifteen products, viz, corn, wheat, oats, barley, rye, potatoes, cotton, tobacco, hops, flaxseed, rice, sugar, cocoa, silk, and wool.

The compilation of the number of live stock for all countries for which the facts are known or estimated has been improved and expresses the best information concerning the number of cattle, dairy cows, horses, mules, swine, asses, sheep, domesticated buffaloes, camels, goats, and reindeer.

MEAT SUPPLY AND SURPLUS.

An investigation in relation to the meat supply and surplus of the United States was made, to determine, among other things, the meat production of this country and the per capita consumption, the importance of the meat industry as indicated by the capital directly concerned, the disposal of the national surplus of meat among importing countries during a long period of years, the stock of meat animals at census dates beginning with 1840, and the declining per capita consumption of meat.

In this investigation attention was given to meat consumption by workingmen's families, as determined by the Bureau of Labor; to the prices of meat and the consumer's cost of the meat consumed annually. Much information was presented concerning the quantity of meat consumed in foreign countries. A specially full statement was prepared for Germany, made possible by the meat-inspection law of 1904.

This investigation made it possible to state the number of hides and skins produced in this country in 1900 and also the number of beef hides consumed in that year.

An investigation was also made of the restrictions against the importation of meat from the United States into principal European countries, which resulted in a summary of the prohibitions of principal European countries affecting pork, cattle, and beef, and of the restrictive measures which make the exportation of meat and meat products from the United States to these countries difficult, if not impossible, and of the technical procedures in exporting to those countries.

COMMENT ON CROP REPORTS.

During the year the Bureau and its reports have not been the subject of unfavorable comment and criticism, and it appears that the efforts which have been made to strengthen and improve the crop-reporting service have been productive of good results, which are appreciated by the country at large. Generally favorable and complimentary comments have been received from agricultural organizations in the South and throughout the country, who are appreciative of frankness, promptness, and accuracy in the preparation and publication of the reports.

THE LIBRARY.

The growth of the Library during the past year has been greater than that of previous years. It now contains 95,660 books and pamphlets relating to agriculture and kindred sciences and the subjects connected with the various activities of the Department. It is as far as is known the largest collection of agricultural literature not only in this country but in any country, and is indispensable in the work of the Department. The greater growth of the past year has been largely due to the increased number of publications received in exchange for the publications of the Department, especially from foreign countries. These exchanges form a very important part of the Library, without which the work of the Department would be seriously hampered.

During the past year 1,815 periodicals, exclusive of annual reports of societies and institutions, were received by the Library, and of this number nearly two-thirds were received by gift and exchange. In addition all the important current scientific works bearing upon the work of the Department are purchased, in so far as the funds of the Library permit. The catalogue of the Library has grown till it now contains about 185,000 cards, forming a valuable key to agricultural and scientific literature.

With the cooperation of the Library of Congress, the Library of the Department has continued the printed catalogue cards for acces-

sions to the Library, and the printed catalogue cards for Department publications, which have proved useful to many libraries. Although the main use of the Library is in connection with the work of the Department, it is in addition the National library of agriculture, and the aim is to extend its usefulness as widely as possible, first by the completeness of its collection, second by the printing of catalogue and index cards and the publishing of special subject lists, and third by the loan of its books to scientific workers connected with the various State colleges and experiment stations. During the past year books have been sent to twenty-nine different States, from Maine on the east to California on the west. Each year the extent and importance of the Library's collections is becoming better known, and the usefulness of the Library, not only to the Department but to agricultural scientists throughout the country, is shown to be steadily increasing.

OFFICE OF EXPERIMENT STATIONS.

RELATIONS WITH AGRICULTURAL EXPERIMENT STATIONS.

The work of the Office of Experiment Stations in its relations with the agricultural experiment stations throughout the United States has been largely extended during the past year on account of its new duties connected with the administration of the act of Congress of March 16, 1906 (Adams Act). Never before has there been such a widespread and thorough discussion of the nature, requirements, and limitations of the different classes of work which our stations have undertaken for the benefit of agriculture. As a result, the organization of the stations has been greatly strengthened and a large amount of fundamental research has been inaugurated, while at the same time broader efforts have been made to reach and aid the masses of the farmers, both by publications and by practical demonstrations of improved methods. The great need and opportunity for fundamental investigations in agriculture have been brought out very definitely, and the wisdom of Congress in providing liberally for the endowment of such research by enactment of legislation of a permanent character has been abundantly shown. It is also more apparent that the more directly practical experiments and demonstrations which have been so popular in the past appeal strongly to local public sentiment and can be readily supported by State appropriations. The legislatures which have met during the past year have shown much liberality toward the stations, and it is evident that the increase of National funds for these institutions will stimulate rather than retard State aid in their behalf.

The plans for the Adams fund work have been worked out with unusual care and deliberation, and, taken as a whole, they embody a large amount of investigation in the true sense, which will place

agricultural science and research upon a higher plane. Considering the condition under which the first year's work had to be planned, the difficulty in securing men, the lack of uniform standards, and the diversity of views regarding what constitutes "original research" in agriculture, the programme must be regarded as very satisfactory. Not only has the amount of investigation greatly increased, but the outlining of the various undertakings in advance has also had the effect of systematizing the station work more thoroughly than ever before, and ultimately this should reflect favorably upon the activities of the station in other lines. If the system inaugurated for the Adams fund projects shall become more generally applied to the station work as a whole, it will be an important result of the first year's operations under the new act.

Together with the strengthening of the organization of the stations, there has been a clearer differentiation between their legitimate work and that of the colleges, farmers' institutes, and other educational agencies. In a considerable number of instances special officers have been provided whose main duties are in connection with the investigations under the Adams Act, and a number of stations are looking toward the provision of a staff for the station work, practically distinct from the teaching staff of the college. This better provision for the station work will increase its efficiency, prevent serious interruptions, and make the station more strictly an institution for experimentation and research in agriculture.

The lack of men is one of the most serious drawbacks to development in this line, and it is now realized that the question of human equipment is the most vital question before the experiment stations to-day. During the past year the pressure has become intense, resulting in many changes of men from one locality to another and often preventing stations from inaugurating new lines of work. The well-trained man competent to originate and conduct thorough and satisfactory investigations is the all-controlling factor of success in agricultural research. Without such workers generous funds and elaborate equipment become ineffectual. The present shortage of men is due in part to the development incident to the increased funds, but in large measure to the new standards which are being established for station work. These standards impose additional requirements and qualifications, and thus practically eliminate from consideration many who might formerly have been thought eligible for station positions.

We must look to the agricultural colleges to train more men for this important work and to inspire them with the proper spirit and point of view. This will necessitate a further differentiation of courses of study to meet the needs of agricultural scientists as contrasted with those of practical farmers. Not only must the standard

of undergraduate courses be raised, but special graduate courses of the most thorough character must be provided. Otherwise the development of the experiment stations will be delayed and the agricultural interests of the country will suffer.

The institution of so much research of a higher order in connection with the agricultural colleges and experiment stations is already proving a strong inducement to men of a higher type to engage in this work, and more young men of the right caliber are taking advanced courses in branches relating to agriculture. As soon as it becomes evident that our stations will pursue a consistent and permanent policy with regard to higher research in agriculture we may confidently expect a great improvement in the personnel of their staffs.

THE AGRICULTURAL COLLEGES AND SCHOOLS.

Each year now witnesses a great extension of the movement for the diffusion of agricultural education among the masses of our rural population. The national character of this movement has during the past year been conclusively attested by the passage by Congress of the Nelson amendment to the appropriation act for this Department for the fiscal year 1908, in which provision has been made both for extending the ordinary agricultural courses in our colleges and for the training of teachers of agriculture for the elementary schools. The celebration at Lansing, Mich., of the fiftieth anniversary of the beginning of agricultural education in this country marks an important step in the progress of the education of "the man who works with his hands." There have also been numerous local examples of the growth of this movement, notably the establishment of eleven agricultural high schools in Georgia, of single agricultural high schools in a number of States, and the enactment of permissive or mandatory legislation concerning agricultural high schools and the teaching of agriculture in the common schools in Texas, Michigan, and other States.

With every forward step in this movement greater demands for assistance are made upon this Department, and it becomes more clearly evident that in keeping with American custom in other lines some National agency is desirable to focus the experience gained in our several States and in other countries and, without exercising any control, but by diffusing information and stimulating local enterprise, to aid in systematizing and developing an efficient system of agricultural education throughout the length and breadth of our land. Such work in agricultural education as this Department, through its Office of Experiment Stations, has attempted to do has been along these lines. During the past year that Office, under authority granted by Congress, has responded to demands for services extending over the entire range of agricultural education from grad-

uate instruction to the most elementary forms of extension work. Representatives of that Office have visited the agricultural colleges, prepared upon request courses in agriculture for agricultural high schools in Georgia and Maryland, addressed important meetings in the interests of agricultural education, and assisted at county institutes in preparing teachers of elementary agriculture.

Cooperation with the Association of American Agricultural Colleges and Experiment Stations in matters relating to agricultural education has been continued. As chairman of the standing committee on instruction in agriculture, the Director of that Office has aided in preparing exercises and courses of instruction for elementary and secondary public schools. He has also consented to act as dean of the Graduate School of Agriculture during its third session, in 1908, at Cornell University, and begun to organize the faculty and work of that school.

As regards the subject-matter which is needed to form suitable courses of instruction in agriculture and to aid the teachers in elementary and secondary schools in adapting such courses to the requirements of different regions and different classes of students, the Office of Experiment Stations is in a position to render a service which it would be difficult for any other agency to perform. That Office regularly gathers and reviews practically all the literature on agricultural subjects issued by public and private institutions throughout the world. Out of the mass of material it now selects and abstracts for publication in the Experiment Station Record a few of the most important articles, but it could at comparatively little additional expense select and put in pedagogical form much more information that would be of very great service to teachers and students of agriculture in every State and Territory. If elementary and secondary instruction in agriculture is to be established in an effective manner and kept thoroughly alive and up to date our schools must regularly receive and utilize the new knowledge which the institutions for agricultural research and advancement are accumulating.

The information now issuing from so many sources and in so many languages and forms is at present almost wholly beyond the reach of the public school teacher. It must be worked over, selected, and published in usable form before the schools can effectually utilize it. No State agency is in position to perform such a service for the whole country, and it would therefore seem to be a proper function of the National Department of Agriculture and of that branch of this Department which is most closely in touch with both research and educational institutions working along agricultural lines. At relatively small additional expense the value and effectiveness of the aid which this Department is now extending to agricultural education could be multiplied several times.

FARMERS' INSTITUTES.

The reports received from the State directors of farmers' institutes show that there has been a large increase in attendance during the past year. The total attendance was more than 1,500,000, exceeding by several hundred thousand that of the previous year. Special subject institutes are rapidly growing in favor. Most of the States have held special dairy, fruit-growing, corn-judging, and cattle-judging institutes. These meetings were devoted to a discussion of some one of these topics, were continued from two days to a week, and were conducted by expert instructors who gave practical demonstrations in connection with their lectures. Seven States held special institutes for women, and contests in growing corn, wheat, flowers, fruits, and vegetables have been instituted in a number of States to interest the farmers' children in the institute movement.

The movement for supplementing the farmers' institutes by the holding of short courses of instruction in special subjects at the agricultural colleges and in different agricultural districts is growing rapidly and already attempts are being made to organize and develop these movable schools. To aid this movement by showing definitely the character of courses of instruction which might be given on this plan this Office has arranged with agricultural experts for the preparation of a number of such courses.

In cooperation with the standing committee on extension work of the Association of American Agricultural Colleges and Experiment Stations, this Office has made an extended study of the agencies outside of the farmers' institutes which are engaged in diffusing agricultural education among our rural people. The results of this investigation have been embodied in reports of the committee of the association and have been published as circulars of this Office. It is evident that a broad field of usefulness is opening before the agricultural colleges in extending their work of instruction among the masses of agricultural people who can not attend the courses given at these colleges. They are now beginning to organize and develop an adequate system of extension work in agriculture. To aid them in this work they are calling on this Office for services which are entirely beyond our power to perform with our present force. Since the National Government is so fully committed to the policy of giving the States assistance in diffusing scientific and practical information on agricultural subjects among our rural people, it would seem a wise thing to provide the comparatively small fund needed to make this Office an efficient clearing-house for this forward movement in agricultural education.

This Department and the agricultural colleges and experiment stations are doing a great work through their publications and courses

of instruction, but as yet the masses of our farmers are only indirectly and superficially affected by the work of these institutions. Strenuous efforts and a broadly organized movement will be required to bring home to the masses of our farmers the results of exploration and research on their behalf. It is time that careful attention should be given to devising efficient ways and means for completing the great work of agricultural advancement to which both the Union and the States have committed themselves.

Foreign countries for many years have appreciated the importance of orally instructing rural people in agriculture. In addition to agricultural teaching in their universities, colleges, normal schools, academies, and secondary and common schools, numerous special classes of adults are organized in the country districts for instruction by itinerant methods. Professors of agriculture under Government direction are sent out to give instruction in the normal and rural schools, and to organize farmers' societies for the promotion of agriculture. Numerous agricultural high schools have been established, particularly in Denmark and Sweden, and are attended by large numbers of rural people of mature years. Demonstration fields showing the effects of various manures, methods of culture, and varieties of seeds upon crop production are found everywhere. More than 3,000 of these demonstration fields and farms are in operation in France alone.

Movable schools of agriculture form an important part of the educational system in all of these countries. They embrace schools of general agriculture, schools of forestry, horticulture, market gardening, apiculture, aviculture, dairy schools, poultry rearing, farriery, domestic science, and on other similar agricultural subjects. Expert advisers are employed by the State to visit individual farmers and give advice with regard to the methods of operation best adapted to their conditions. Universities and colleges are extending their activities to outlying communities, to farming people who are unable to leave their farms to attend classes at the collegiate centers. The practical results of the foreign system of agricultural research and education are shown in the increased production of these countries as compared with the United States, where the masses of the farmers have not been reached by organized educational agencies.

INSULAR STATIONS.

The experiment stations in Alaska, Hawaii, and Porto Rico have made pronounced progress during the year, and their efforts in the development and diversification of agriculture are beginning to be appreciated in their several communities.

The Alaska stations are devoting their efforts to live stock, horticultural crops, and cereal growing. In continuation of the policy of developing a station herd, there are now over 40 head of Galloway cattle

divided between the Kenai Station and the newly established animal breeding station on Kodiak Island. The principal experiments at the central station at Sitka are along horticultural lines and plant breeding. As a result of the plant-breeding experiments, hybrids of strawberries, raspberries, and other small fruits have been produced and are under observation. These are the results of crossing some of the native hardy species with improved varieties. Cereal investigations and the production of forage are being given especial attention at both the Rampart and Copper Center stations. Winter wheat and winter rye and spring-sown wheat, rye, barley, and oats matured their crops at Rampart during the past season, as they have done every year since the establishment of the station in 1900. Some of the varieties of cereals ripened at Copper Center, several hundred miles farther south, but nearer the mountains. At both stations the production of grain hay has been shown possible. Work was begun this year at the station in the Tanana Valley near Fairbanks, and a considerable area was cleared and prepared for cultivation. The special agent in charge anticipates important results from the establishment of this station, as it is nearly in the center of a large area that is apparently capable of considerable agricultural development.

The Hawaii Station has continued its investigations along the lines of diversified agriculture, devoting especial attention to investigations on tobacco, rubber, rice, and honey and fruit shipments. That cigar tobacco of good type can be successfully grown in Hawaii has been proved. The rice investigations have already shown the possibility of greatly increasing the yield of that crop, and at the same time the expense of production may be reduced by the adoption of more modern methods of cultivating and handling the crop. The planting, cultivation, and tapping of rubber trees and the coagulation of the latex are being investigated, and promising results have already been obtained. The experiments in fruit shipment have been continued, and it has been shown possible to land Hawaiian pineapples and avocados in Chicago in excellent condition. These investigations are of great economic importance to Hawaii, as they show the possibility of supplying the markets of the western portion of the United States with tropical fruits. Studies have been made that lead to a better understanding of Hawaiian honeys, which will possibly result in an enlarged market for that important product.

The Porto Rico Station is giving its attention to problems of soil management, crop rotation, methods of cultivation and improvement, horticultural problems in connection with citrus and other fruits, pineapples, etc. Following the successful efforts of the station in shipping pineapples to New York and other markets, large quantities of the more desirable varieties are now being exported. The station is carrying on cooperative work with planters along a

number of lines, and the results of these efforts are beginning to be seen in the adoption of improved methods of crop production. The coffee experiments have been especially valuable, and if the economic conditions relating to the marketing of the crop should be changed, the suggestions given regarding planting, fertilizing, cultivation, pruning, and shading will be widely adopted. The collections of economic plants are being extended, and the horticulturist reports the successful introduction of a considerable number of varieties of European and American grapes. The entomologist has devoted much of his time during the past year to combating the insects occurring on citrus and other trees, and reports the discovery of a very active parasite on the eggs of the tobacco horn worm. It is believed that this parasite can be successfully utilized.

The stations are all developing quite rapidly, and for their proper support I recommend for them appropriations equal to the amounts given each of the State stations under the Hatch and Adams acts.

NUTRITION INVESTIGATIONS.

The nutrition investigations, carried on under the auspices of the Office of Experiment Stations, were undertaken primarily to learn the nutritive and economic value of agricultural products of animal and vegetable origin used as food for man. In carrying on the work during the past year it has been the policy, as in the past, to cooperate with agricultural experiment stations, agricultural colleges, universities, and other institutions in different States and Territories, and to establish centers of investigation wherever an institution or region offered special facilities. Thus, cereals and cereal products have been studied at the Maine and Minnesota agricultural experiment stations, the nutritive value of fruit and nuts at the California Experiment Station, and the nutritive value of cheese at Middletown, Conn., and the Minnesota Experiment Station. In this way the Department funds have been materially supplemented by the contributions of the cooperating institutions and the results obtained have been large in proportion to the outlay. New experiments have been undertaken whenever the completion of any line of work has rendered this possible, and the enterprise as a whole has been systematized and grouped as a series of projects in accordance with the general plan for the work of the Department of Agriculture.

The Washington office has been responsible for the plans for the work as a whole, for the editing of the results, and the distribution of information, as well as for some special investigations.

The experiments at the California Agricultural Experiment Station have demonstrated the comparatively thorough digestion of fruits and nuts of different sorts and the nutritive value of these important crops and their value as foods rather than food accessories.

At Middletown, Conn., the results of respiration-calorimeter experiments have been prepared for publication on the subjects of muscular and mental work as related to energy income and outgo and the demands of the body for food. From the elaborate experiments reported it does not appear that mental work exercises a positive influence on metabolic activity—that is, on the amount of oxygen consumed and carbon dioxid and energy given off from the body—nor does it modify the body demands for nutrients and energy. Muscular work, on the other hand, is absolutely dependent on the energy supplied by the food or material stored in the body from previous food supply. The total energy output, which may be readily determined with the respiration calorimeter, is a definite measure of the total work performed by the body, and hence of the amount of energy which the food must supply for the performance of a given kind and amount of work. In other words, it is possible to determine with the respiration calorimeter energy requirements as expressed in dietary standards.

Man's efficiency as a machine for the performance of work has been studied in connection with the respiration-calorimeter experiments and found to be 21 per cent in round numbers, or much higher than that of even the most perfect engine.

In accordance with the action taken by Congress at its last session, the respiration calorimeter and accessory apparatus have been brought from Middletown, Conn., to Washington and stored.

The experiments on the digestibility and nutritive value of different kinds of cheese, carried on at the Minnesota Agricultural Experiment Station, supplement earlier work of this character at Middletown, Conn., confirm the results obtained, and materially extend the conclusions reached. As shown by the large number of digestion experiments with healthy men, cheese, both the ordinary American Cheddar and other sorts studied, is on an average very thoroughly digested without physiological disturbance and compares favorably with other staple foods as a source of nutrients and energy. In other words, cheese is to be regarded as a food for use in quantity when desirable or convenient rather than as a condiment for occasional use.

At the University of Illinois the experiments on the effects of different methods of cooking on the nutritive value and digestibility of meat of different kinds and cuts have been continued. The conclusion reached is that meats of all kinds are to be ranked among the very digestible foods. No marked difference was observed in either the ease or thoroughness of digestion of different kinds or cuts.

Experiments on domestic canning and preserving of vegetables have been continued at Wellesley College, Massachusetts, and as a result of this inquiry and earlier work satisfactory methods have been devised and await publication.

The studies at the University of Chicago of the changes brought about in cooking fruits and the effects of different methods on the yield and quality of the cooked product have furnished valuable data applicable in domestic jelly and jam making.

At the Maine Agricultural Experiment Station investigations regarding the digestibility and nutritive value of different sorts of corn meal prepared for the table in a variety of ways have been continued, and the work as a whole has demonstrated the high nutritive value of this important cereal crop and shown the reasonableness of its use in quantity as an integral part of the diet.

The studies of the effects of different methods of grinding on culinary quality, which have been made at Teachers' College, Columbia University, New York, have made it plain that by suitable methods of manipulation in cooking it is possible to obtain uniform results with both old water-ground and new-process meal.

As a result of the extended work on corn a Farmers' Bulletin has been prepared, summarizing available data on the use of this cereal as food.

As regards the digestion, assimilation, and nutritive value of flour products other than bread, the investigations which have been carried on at the Minnesota Agricultural Experiment Station, in continuation of earlier work on cereal foods, show that such goods closely resemble bread in their digestibility and that the various methods of handling flour in cooking and the combining with it of other foods, as shortening, do not materially affect the proportion which is digested.

At Columbia University, New York, studies on the ash content of foods have been continued, and a bulletin has been prepared setting forth the results obtained with calcium, magnesium, and phosphorus.

Cooperating with Drexel Institute, Philadelphia, dietary studies have been made in a home for aged women and an orphan asylum. It is proposed to incorporate the results with those of similar work carried on in Baltimore institutions as a contribution to the question of dietetics in relation to institution management. The results also supply valuable information regarding food requirements in early youth and old age as compared with the period of full vigor.

Studies of the pedagogics of nutrition have been continued, especially in cooperation with Teachers' College, Columbia University, New York, and a large amount of data has been collected and systematized regarding the higher courses in domestic science which are given in American agricultural colleges, universities, normal schools, and kindred institutions. The total number at present on record which give such courses is 150, of which one-third are institutions receiving Government aid. The courses vary decidedly in scope and extent, but the importance which the subject of home economics is

assuming in modern education is very apparent from the data available. The nutritive value of food is one of the important subjects included in such courses, and in these institutions, as well as in medical colleges, Department nutrition publications are very commonly used as text-books, owing to the fact that other satisfactory reference works on the subject have not hitherto been available. These publications are also largely used in the numerous secondary and elementary schools where courses on foods and cooking are given.

The results of the nutrition investigations are made public by means of technical bulletins and popular summaries, and in addition a great deal of miscellaneous information is supplied to teachers, students, and other persons by means of correspondence, the increasing demand for publications and other data being an indication of the favorable way in which the work is regarded by the people at large.

The problems concerned with the rational and economical utilization of agricultural products as human food are so intimately and vitally related to those connected with the production of the food stuffs on the farm that the nutrition investigations may well be a part of the work of this Department. The experimental methods which have been elaborated and the lines of work which have been followed in the nutrition investigations are well fitted to supply the information which is needed in order to utilize in a satisfactory way the available food supply in the proper and economical feeding of families and groups. In view of the demonstrated usefulness of this work and the large demand for information along these lines, especially for use in connection with our public and private schools, where the scope of instruction relating directly to home life of our people is being steadily enlarged, I earnestly recommend that provision be made for the continuance of these investigations. A place has been provided in the new Department building for the respiration calorimeter, and it will be possible there to continue the fundamental researches which are required to put our knowledge of the utilization of food in the body on a thoroughly scientific basis.

IRRIGATION AND DRAINAGE INVESTIGATIONS.

Recently the chief of irrigation and drainage investigations has accepted an invitation of the Australian government to take the supervision of the work in irrigation which that government is about to undertake for the benefit of agriculture in that country, and has withdrawn from the service of this Department. This has opened the way for a reorganization of our irrigation and drainage investigations, which seemed advisable in view of the present extent of this enterprise and a quite distinct differentiation of the irrigation work from that in drainage, both as regards the character of the projects and the regions in which they are carried on.

IRRIGATION INVESTIGATIONS.

The work of this Department in irrigation divides itself into three geographical divisions, each with its own peculiar problems: The older irrigated sections, where the irrigated area has been extended to the limit of the water supply and where economy in water is the most pressing necessity; the section just brought under ditch, where water is plentiful for the present and where the prevention of waste of labor and money by the settler in bringing the land under cultivation is a condition of success; and the sections where farming has been carried on without irrigation but where droughts occur with sufficient frequency to make success doubtful, or where raising prices or soil exhaustion makes more intensive farming necessary.

The work in the older sections consists of experiments to determine the losses of water under ordinary practice and how these losses may be prevented. Water is lost by seepage from ditches, by evaporation from water surfaces and from the wet soil, by percolation beyond the reach of plants, and by waste which may seem necessary to properly wet the soil. We are making experiments to find cheap and effective ditch linings to prevent seepage losses, which in many instances are more than 50 per cent of the water entering the ditches. We have made experiments to determine the losses by evaporation and the effectiveness of different methods of applying water and cultivating the soil after irrigation in checking these losses, the results showing that half the water lost in this way can be saved. We have made observations to determine how far the water applied by different methods to different types of soil penetrates into the soil for the purpose of adapting methods of applying water to soil conditions in such a way that proper moisture conditions may be maintained without loss by percolation beyond the reach of plant roots or by surface run-off.

During the past five years construction of irrigation works has outrun settlement. During that time the Government has expended $40,000,000 in irrigation construction, and private parties at least an equal amount. A canvass recently made indicated that as a result of this activity there would be at least 5,000,000 acres of unreclaimed land provided with a water supply ready for settlement in 1908. The cost of preparing this land for irrigation and providing the equipment for successful farming will be fully as great as the cost of building the canals to bring water to it, so that when the canals are built the work of reclamation is but half done. The safety of this whole investment in irrigation works and in the preparation of land for use, and, what is much more important, the safety of thousands of future homes, depend upon the use of proper methods both in the preparation of the land and in the subsequent use of water. The

cost of the irrigation works, whether they are built by the Government or by private parties, must be repaid by the settlers, and their success or failure means success or failure for the projects. These settlers must come largely from sections where irrigation is not practiced, and will be unfamiliar with the use of water. Mistakes in the preparation of the land and in the adoption of methods of applying water are costly not only in the time and labor lost, but also in decreasing crop returns, and, in addition, they come at a critical time, when payments for land, water, implements, stock, and food are all pressing. It is our endeavor to aid the settlers at this crucial time by telling them how to do the work with the least expenditure of time and money, and in such a way as to get the best results. This is done through bulletins, the giving of practical directions through personal advice by the more experienced of our field men, and through demonstration farms established under cooperative agreements with local parties, with State experiment stations, and with the Reclamation Service of the Department of the Interior.

In the semiarid region the four irrigation extension farms established last year have been maintained. Each is situated where no large supply of water is available and where most of the land must be farmed without irrigation. These stations are to determine and demonstrate the possibilities and cost of irrigation with the small water supplies which can be made available in these regions in the hope that the irrigation of a small area in connection with the use of drought-resistant crops and intensive cultivation on a much larger area may enable settlers to successfully maintain homes on the high plains, which otherwise must be devoted to grazing only.

The rush of settlement in this region in the past few years is in many respects similar to previous waves which have swept over it, and many have feared a repetition of the former disasters which wrecked so many homes and lives. It is to guard against this that we are making every effort to provide the settler with a means of pulling himself through the years of drought, while looking to the wet years for his profit.

It is our belief that irrigation may profitably be extended into other sections where it has not been considered necessary. We are this year carrying on experiments to determine this in the Willamette Valley in Oregon and in the Sacramento Valley in California, while we have maintained an experiment as far east as Iowa. Previous experiments have shown that irrigation is profitable as a crop insurance, even in the extreme East, and a knowledge of its possibilities and methods will lead to its extension in the future, until it will be practiced to some extent throughout the United States.

In many places where irrigation is now practiced water is secured by pumping, and the extension of irrigation into many sections will

depend upon the ability to secure water in this way cheaply. The use of power in irrigation and drainage is made a part of our work, and we have made many tests of pumps, engines, and windmills, in order to be able to answer the inquiries received from those wishing to pump water for irrigation. These tests show efficiencies of the pumping machinery varying from 5 to 80 per cent, thus demonstrating the great need which our farmers have of accurate information on which to base their purchases of machinery suited to their purposes.

DRAINAGE INVESTIGATIONS.

This line of work has developed and expanded more rapidly during the last year than ever before. The demands for information, assistance, and advice in relation to the drainage of agricultural lands in all sections of the country have been so numerous that it has been beyond the physical possibilities of the available office and field force to comply with all the requests, and it has hence been necessary to postpone compliance with many meritorious applications for assistance.

The drainage work has been carried on along the following well-established lines:

(1) The examination, study, and comparison of past and current drainage practice as developed under differing conditions in various sections of this country and abroad, with special reference to determining the success or failure of the various methods attempted in solving the problems of agricultural drainage, and the efficiency or inadequacy of the various systems for use in those localities where drainage is an important factor in agricultural development. The information thus collected is arranged, systematized, and issued in bulletin form as rapidly as practicable, with the object of furnishing to the public generally, and especially to agricultural engineers and those charged with the responsibility of the successful carrying out of drainage enterprises, a comprehensive, reliable, and up-to-date body of knowledge covering the scientific bases upon which all successful drainage work must rest, and an epitome of the best practice as developed under recent conditions. It is the intention thus ultimately to have a complete compendium of the knowledge necessary for the planning and execution of drainage work under all the great variety of diverse conditions which obtain in the different portions of this country—knowledge which now does not exist in any available printed form and the lack of which is responsible for a large portion of the requests for information which now come to this Office from engineers and technically educated men.

(2) Assisting farmers, communities, and States in the initiation and direction of drainage improvements. It has been the unfortunate experience of most localities requiring drainage that a large

portion of the first attempts to secure needed improvements have resulted in failure. Such attempts resulting in total or partial failure not only entail the involved financial loss and delay, but have tended greatly to discourage and render more difficult the prosecution of other meritorious enterprises. Nevertheless, out of such a history of numerous failures and difficulties in accomplishing adequate drainage many communities in those States where drainage has been satisfactorily accomplished for many years have evolved from a state of unhealthfulness and poverty to a condition of unrivaled prosperity. It is with the hope of preventing expensive mistakes and avoiding exasperating delays, with their attendant discouragements, that this Office assists in the inauguration of drainage projects. This assistance is given most fully in those States and localities where drainage is a new feature, so that the results of previous similar local work are not available as a guide and example. The most common errors in the preparation of plans for drainage arise from a lack of the technical knowledge requisite to secure good engineering design, and from a want of appreciation on the part of those undertaking the work of the size and extent of work necessary to secure the desired effects. In these matters this Department is in position, by the experience and standing of its staff, to give advice which carries such weight as to settle local differences of opinion and promote the cooperation of all the parties at interest.

(3) Examinations and experiments relating to such technical problems pertaining to land drainage as to which there is at present a lack of existing knowledge. These investigations include a study of the drainage coefficient of agricultural lands of different types, the relation of flood run-off to different climates and kinds of topography, systems for draining muck lands which border on peat formation, the movement and behavior of water in irrigated land, the laws of erosion of ditches and of the sedimentation of ditches, tests of the best methods of making, handling, and using cement drain tile, and similar questions. As an illustration of this kind of experimental work, the Office is now conducting experiments as to the efficiency of the use of drain tile in the far North, where the ground freezes to a depth of 6 feet or more in the winter; in the sticky and impervious gumbo soils of the southern Mississippi delta region; and in the exceedingly fine volcanic ash soils of the irrigated Rocky Mountain region.

The operations of the drainage investigations have included work during the past year in about two-thirds of the States of the Union. The survey of the Kankakee Valley project in Indiana was completed and a report embodying the results of three years' investigation was prepared and transmitted to the local authorities. Nearly half a million acres in this valley were once a marshy plain. During

the last twenty years numerous small projects for the improvement of the drainage of separate portions of the upper end of the valley and areas along its outer margins, by means of straightening, cleaning, and deepening parts of the channel of the river and its tributaries, have been successfully completed. In this way large areas have been rendered available for profitable agriculture. At the time this Office took up the work local jealousies and differences of opinion had reached such a state that it seemed impossible for the various interests to reach an agreement which would lead to the relief and improvement of the large and important areas embraced in the main lower part of the valley.

As a result of the careful surveys and studies by the engineers of this Office a comprehensive plan was prepared in this Office for increasing the carrying capacity of the lower portion of the river channel by shortening its length from 72 miles to 42 miles. This is accomplished by cutting off 84 bends of the present stream by cuts varying from 150 to 5,500 feet in length. The excavation of this channel will require the removal of nearly 10,000,000 cubic yards of earth and will cost approximately $1,000,000. This improvement involves six counties in Indiana and one in Illinois. Probably 500,000 acres of land will be directly benefited. The value of these improvements can scarcely be estimated, although similar land in Indiana has risen in value from $5 to $100 per acre after drainage.

During the winter of 1906–7 a preliminary survey was made of a part of the Everglades of Florida, an area of swamp land covering some 5,000 square miles. A line of levels was run from Fort Myers, on the Gulf coast, across the glades south of Lake Okeechobee to the Atlantic coast, connecting on the way with the surface of Lake Okeechobee. This survey was made in the face of great physical difficulties, it being necessary for the men engaged to carry all their supplies for a distance approximating nearly 50 miles through soft muck, with the aid of canoes for only part of the way. This was the first time that a survey had ever been carried across the region, although there had been numerous previous attempts. The results so far attained encourage the hope that the further investigations which will be made will prove the practicability of reclaiming profitably for agricultural use a large area of this land, which is now too wet to be successfully cultivated and is hence practically worthless.

Surveys of the lowland subject to injury by overflow lying along the Red River of the North in North Dakota were concluded in Pembina County, thus completing the project previously begun and embracing also Cass, Traill, Grand Forks, and Walsh counties. The total area surveyed was about 3,000 square miles. Plans and estimates were prepared for drains for this entire area. The work was carried out under a cooperative agreement among the counties inter-

ested, the State engineer's office of North Dakota, and this Office. The report has been printed and submitted to the local authorities.

The field work was completed and plans prepared and submitted to the people for improving the Neosho River in southeastern Kansas. The watershed drained by this stream embraced 5,090 square miles and the plans provide for the protection of 161,000 acres of overflowed land, at an average cost of $9 per acre. It is generally conceded that the loss and damage from the overflow in 1904 were more than the estimated cost of protecting these lands. The report discusses fully the engineering problems involved, and the accompanying maps give the elevation of the overflowed lands and the profile and cross section of the stream and the details of the proposed improvement.

Much attention has been given to the possibilities of drainage in the Delta region of the lower Mississippi Valley. A very active interest has recently developed in drainage in this region. In Arkansas, Louisiana, Mississippi, and Missouri there is a constantly growing agitation of the matter. The completeness of the levee system is now rendering safe the expenditure of large sums for the improvement of the low flat lands formerly subject to overflow by the Mississippi floods. This Office has made preliminary examinations of large portions of this region and has so far as means were available assisted in the organization and plans for actual drainage construction for definite limited areas.

The problem of the reclamation of the swamp tide lands along the Atlantic coast has been frequently urged upon this Office, and has received special attention during the last year. Special examinations have been made in various localities, advice has been given, plans have been prepared, and publications have been issued devoted to this phase of drainage. Experiments to determine the best methods for the removal of excess seepage water and accumulated alkali from the irrigated regions in the West have been continued.

Gratifying reports have come to the Department from localities where the drainage plans, prepared in previous years, have been put into execution, showing the great benefits which have accrued to farmers who have carried out the advice given by this Office. During the last fiscal year plans were prepared for the drainage of about 2,000,000 acres.

OFFICE OF PUBLIC ROADS.

It is the province of the Office of Public Roads to investigate the various conditions affecting the public roads and to ascertain and make known the remedies for the evils in existing systems and methods of road construction and administration. During the past year the work of the Office was divided into twenty-two projects,

dealing with practically every subject of interest in connection with wagon roads. This represents a greater number of projects than have been undertaken in any single previous year.

ROAD MILEAGE, REVENUES, AND EXPENDITURES.

The close of the year marked the completion of the first census ever made to determine the road mileage, revenues, and expenditures in this country. This investigation was begun early in 1905. Information covering the calendar year 1904 was obtained from carefully selected correspondents in every county in the United States, from State highway departments, State geologists, city and county officials, employees of the Office of Public Roads on field duty, commercial and agricultural associations, and newspapers—in fact, every possible source of information was used. In some of the States reports were made by townships. While these reports are in some cases incomplete, the greatest care has been taken in their verification, and the results as a whole are reasonably accurate. The bulletin recently issued on this subject shows the enormous total of nearly 2,152,000 miles of public road; that 7.14 per cent of this mileage has been improved, and that the total expenditure for 1904 was approximately $80,000,000. Considering the fact that our improved roads have been in process of construction for a number of years, it becomes evident that the results which we are obtaining are totally inadequate to the amount of money expended, and that the mileage is so great that we must of necessity classify our roads according to their importance, bearing in mind the fact that by far the largest proportion of our earth roads must be maintained as such for many years to come.

METHODS OF ROAD CONSTRUCTION AND MAINTENANCE.

The construction of object-lesson roads in cooperation with local authorities was continued during the year along the same lines as in previous years, excepting that greater attention was given to the building of earth, sand-clay, and gravel roads. In every case the local authorities furnished common labor, materials, teams, and fuel. The engineers of the Office of Public Roads were instructed to ascertain in their preliminary work as accurately as possible the character of construction best suited to the locality, and under no circumstances to recommend the building of a road which, though excellent in itself, might represent a form of construction ill suited to the locality or too costly to be continued. Sixteen roads were completed during the year, representing a total of 200,711 square yards, which is far greater than the amount completed in any preceding year. The work of construction was supplemented when practicable by informal lectures, explaining the methods used in building the object-lesson roads.

The endeavor has been made to reduce the cost of construction to the lowest point consistent with efficiency, recognizing the fact that the cost of building improved roads is the chief obstacle in the way of their general adoption. The cost of macadam in a road built at Williamsburg, Va., was only 36.3 cents per square yard, or at the rate of $2,556.22 per mile, exclusive of engineering assistance and machinery furnished by the Office.

Work on the object-lesson roads was carried on during the year in Alabama, Arkansas, the District of Columbia, Kansas, Kentucky, Louisiana, Maryland, Montana, Nebraska, North Carolina, Oregon, Tennessee, Virginia, and Washington.

A bulletin on the construction of macadam roads, based upon the best practice in the States which have made the greatest progress in macadam road building, was issued during the year. Earlier studies of sand-clay and burnt-clay construction showed these to be valuable methods in those sections of country where hard materials are lacking.

The mixing of sand and clay has long been recognized as an effective method of road construction. The burning of clay for railroad ballast was begun some years ago, but its adaptability to road building has only been made known by this Office in recent years.

Experiments in the use of burnt clay as a road material at various points in Mississippi give most favorable indications of success, and it seems quite probable that a long step forward has been taken in solving the road problem in the Mississippi Delta.

The maintenance of earth roads has received special consideration, and an expert in the construction and use of the split-log drag has been employed to aid in the general introduction of this simple and effective means for bettering earth roads.

Many failures in road building are due not so much to a general disregard of standard methods of construction as to serious mistakes in some particular feature of the work. For instance, the cost of quarrying the stone may be excessive through ignorance of the best practice; the road may prove unsatisfactory because of a poor location or on account of the use of inferior material. In all such cases expert examination and advice will go far toward enabling the local road officials to remove the difficulty. During the past year about forty such assignments were made from the Office of Public Roads. In one county in Alabama a strong movement was on foot to issue bonds for a large amount for the purpose of building macadam roads. An engineer detailed from this Office upon request ascertained that the conditions were satisfactory for building sand-clay roads and very poor for building macadam roads, the material for the latter being inaccessible except at great cost. He advised the building of sand-clay roads. His advice was followed, and to-day that county has 118 miles of road built at a cost of $22,000 which meet the requirements of traffic practically as well as macadam roads would do.

LECTURES.

The trend of public opinion with reference to our public roads is indicated by the requests which have been received during the past year for the detail of men to lecture on road improvement. In former years the demand for lectures on road improvement came largely from road organizations, but during the past year requests have been received from agricultural, industrial, scientific, and commercial organizations which are taking up the subject. These requests have been complied with as fully as possible, and the most careful effort has been made in all cases to confine the lectures to practical topics, and to give information and advice based upon actual experience and careful study of the subject. In all, about 150 lectures were given during the year.

INSTRUCTION IN HIGHWAY ENGINEERING.

The plan of appointing graduates of engineering schools to the position of civil engineer student in the Office of Public Roads has been continued during the past year with marked success. The necessity for competent highway engineers to direct the work of road building along proper lines has become increasingly apparent in recent years. The remarkable success of the French road system is largely due to the fact that the Government maintains a school of roads and bridges, from the graduates of which is recruited a thoroughly efficient corps of highway engineers. The course of training given in the Office of Public Roads of this Department covers a period of only one year, but instruction even to this extent is beneficial to the student, the public service, and the city, county, or State which eventually employs the young man receiving such instruction. Six students were appointed during the past fiscal year, making a total of fifteen since the inauguration of this project.

A plan for introducing more thorough and practical courses in highway engineering in the various schools and colleges was put in operation during the past year, whereby engineers of the Office of Public Roads are detailed for a series of lectures on highway engineering at some time during the regular school year.

INVESTIGATION OF THE PROPERTIES OF ROAD MATERIALS.

The total number of road-material samples received for testing during the year was 405, as compared with 384 for the preceding year. The greater number of samples were received from State geologists and State highway commissions, a gratifying fact, since it insures the best disposition of the data obtained in the Office of Public Roads. The State geologists of Maryland, Massachusetts, Montana, and New Jersey, and the highway commissions of Connecticut, Massachusetts,

Minnesota, Ohio, Pennsylvania, Rhode Island, and Virginia cooperated in this manner.

During the year progress was made in the design of special equipment for conducting road-material tests. The most important addition to such equipment was a new impact machine for testing the toughness of road-building rock. In July, 1906, specifications developed in the Office of Public Roads for determining the toughness of rock for road building were submitted to the American Society for Testing Materials and adopted by that society.

As a result of the petrographic examination of rocks used in road making, a classification of such rocks has been made and facts of importance gained bearing on the relation of the physical properties of rocks to their mineral composition and structure.

SPECIAL INVESTIGATIONS.

I desire to call special attention to the investigation relative to the corrosion of iron. This investigation, begun in connection with the subject of metal culverts and fence wire, has produced results of far-reaching importance. It has demonstrated that the generally accepted theory regarding the oxidation of iron is incorrect, and that by treating the surface of iron with a strong oxidizing agent the rusting can be inhibited so long as the oxidizing agent is present.

Experiments conducted for several years relative to the decomposition of rock powders have also led to valuable results. A fact of great importance in road construction established by this investigation is that a better bonded surface for roads can be secured by mixing rocks such as limestone with the more siliceous crystalline rocks. This work has led to a more extended investigation relating to the extraction of potash from feldspathic rocks. Reference has been made to this work in previous reports, and it has been described in several bulletins. It seems probable that these studies will develop a method commercially practicable for extracting potash from feldspathic rocks. If this is done our dependence upon foreign sources of supply for potash will be decreased, at least to a certain extent.

COOPERATION WITH DEPARTMENTS AND BUREAUS.

During the past year more than thirty rural-delivery roads were inspected, in cooperation with the Post-Office Department, at a cost of only about $950 to this Department. Much improvement has resulted from these inspections.

Between August 17 and October 14, 1906, an engineer from the Office of Public Roads made an investigation of the roads and trails in the Yellowstone Forest Reserve upon request of the Forest Service. A report containing recommendations and estimates was prepared and submitted to the Forester.

The Department cooperated with the Navy Department in the construction of a shell road at the New Orleans naval station; with the War Department in experiments with dust preventives, and with the Geological Survey in designating on topographic maps the character of the roads shown.

INVESTIGATION OF ROAD MATERIALS IN THE SEVERAL STATES.

Previous to the past fiscal year no personal investigation of road materials in the several States had ever been made, owing to the magnitude of the work and lack of appropriation. Last year, however, a cooperative arrangement was entered into whereby the State highway commissioner of Minnesota was made a special agent of the Office and assigned to the work of investigating the road materials in that State. This work will be completed during the present calendar year. It is intended that such an investigation shall be conducted in each of the States as rapidly as facilities will permit. This investigation is designed to ascertain the location, character, quality, quantity, and accessibility of all road materials in the respective States, cost of transportation by rail, by water, and by wagon, suggestions for possible methods of quarrying, probable markets for material, feasibility of using convict labor in the preparation of material, and other essential points.

MODEL COUNTY SYSTEMS.

The roads of a county should be built according to a predetermined and unified system, based upon a most careful investigation of materials, amount of traffic, revenue available, methods of construction adapted to local needs, organization and administration, and all factors entering directly or indirectly into the road work. A plan was inaugurated during the past year whereby the most competent engineers of the Office of Public Roads were assigned, upon request of county authorities, to make such an investigation and to prepare for the future use of the county road authorities an exhaustive and detailed report with plans, estimates, and recommendations indicating the location of all materials, advising which should be used, indicating the roads that should be improved and the method and cost of improvement suggested, needed changes in organization and in methods of administration, and in short affording a guide for future county road work.

The first assignment of this character was made at Santa Barbara, Cal., followed by work of a similar character in Los Angeles County. The success of this work has been recognized, and Los Angeles County is now proceeding under recommendations made by the engineer of this Department.

INVESTIGATION OF DUST PREVENTIVES AND ROAD PRESERVATIVES.

In recent years perhaps the most important and certainly the most difficult problem which has engaged the attention of highway engineers is the prevention of dust. Until the general introduction of motor vehicles dust was considered as neither more nor less than a nuisance. The problem has now, however, assumed a more serious aspect. The existence of our macadam roads depends upon the retention of the rock dust formed by the wearing of the surface. Under ordinary traffic conditions this dust remains on the road and consolidates to form a fresh wearing surface. But a heavy rubber-tired automobile moving at a high rate of speed produces a partial vacuum behind each wheel which sucks up the dust from the road surface and throws it into the air to be carried off by the wind. This action soon strips the macadam road of all fine material, the result being that it soon disintegrates.

France, both by reason of her large mileage of macadam roads and the general use of automobiles, has given this subject the earliest and most thorough consideration. Investigations and experiments have also been conducted in England, and to some extent in this country. During the past year a thorough investigation was made of the systems in use both in France and England. Experiments with tar and oil were conducted during the past summer in Kentucky and Massachusetts with a number of materials and preparations designed to preserve macadam road surfaces.

This is a subject which should engage the earnest attention of the National Government at once. No matter how important we may deem the building of good roads, we can not but consider it even more important to preserve those which have already been constructed. Investigations of dust preventives and road preservatives will be conducted by the Office of Public Roads during this and the next fiscal year as far as its facilities will permit.

THE DEPARTMENT'S WORKING FORCE.

The report of the Appointment Clerk shows that there were on the rolls of the Department at the close of the fiscal year 9,107 employees. Of the entire force, 1,972 were employed in the District of Columbia and 7,135 outside of the District.

The following figures are sufficient to show the growth of the Department during the past forty years: In 1867 the total number of persons employed in the Department was 99; in 1877 the total number was 77; in 1887 there were 328 employees; by 1897 the number had increased to 2,444; and on July 1, 1907, the total number of persons employed had reached 9,107.

OFFICE OF THE SOLICITOR.

Questions affecting the operations of the Department under the statutes committed to it for execution were frequently referred to the Solicitor during the year for written or oral opinions, and several important confidential investigations of a quasi-legal character were conducted under the direction of the Secretary. The correspondence connected with the enforcement of the twenty-eight-hour law is very voluminous. There were 677 cases under this law transmitted to the Department of Justice during the year. Eight cases under the Lacey Act (act of May 25, 1900) regulating interstate commerce in game were reported to the Department of Justice. The Department secured a conviction in the only case reported under the act of June 28, 1906, prohibiting trespass upon the bird reserves set apart for its use by orders of the President. Recovery of property of the Weather Bureau withheld by former employees was effected through the Solicitor in the three cases reported by the Bureau. In a number of cases pending in the Court of Claims at the close of the year the Solicitor assisted the special attorneys for the Government in procuring the evidence and preparing the papers. During the year the Department secured a conviction under the cattle quarantine law (act of May 29, 1884), and reported a number of cases to the Department of Justice, which are now pending. Under the cattle quarantine act of March 3, 1905, three convictions were secured in cases reported by the Department. Several others are pending. In addition to these cases there were 215 complaints against railroads for violation of the regulations of the Department governing the placarding of cars in interstate shipment of cattle from quarantined area investigated by the Solicitor and taken up by him with the respective railroads with a view to securing a rigid compliance with the regulations in the future. The meat inspection amendment of June 30, 1906, went into force in October of that year. One case had been reported to the Department of Justice before the close of the fiscal year. In December the Department secured the conviction of a man who attempted to bribe a live-stock inspector, and he was fined $300 and sentenced to ten days in jail. The meat-inspection amendment of June 30, 1906, imposes upon the Secretary the duty of prescribing regulations for its enforcement. In this work the Solicitor rendered assistance, as well also as in the preparation of the decisions announced by the Department in its interpretation of the food and drugs act. Three patents for Department employees were procured during the year, and others applied for. The Solicitor is one of the three members of the Board of Food and Drug Inspection, in which capacity much of his time is spent. He is likewise a member of the committee on personnel of the Department for the investigation of all serious delinquencies occurring among the employees thereof.

NEW BUILDING FOR THE DEPARTMENT.

The work on the new building for the Department has progressed satisfactorily during the year, and it is hoped to occupy the new quarters within the next month or two. As pointed out in my last report, in considering the question of a building, the imperative need for suitable laboratories to carry on the important investigations of the various bureaus and fireproof space for the library was recognized as paramount. The greater part of the indoor work of the Department is conducted in laboratories, hence the absolute necessity for structures that would be well lighted, well ventilated, fireproof, and otherwise well adapted for the purpose. To accomplish these several objects and at the same time to secure opportunities for continued enlargement, the building has been arranged so that extensions could be made in segments as the work required.

When the act authorizing the building was passed we could not foresee the rapid growth, by Congressional action, of the Department. On February 3, 1903, when the work was authorized, there were in Washington 1,100 persons employed in the Department of Agriculture. At the present time there are over 2,100—almost double the number on the date when the appropriation was made.

While the original appropriation was so expended as to secure the greatest possible amount of floor space, this floor space is now totally inadequate to care for the increase of almost 100 per cent in the number of employees. Full arrangements have been worked out for the occupancy of the present segments and the relinquishment of the several buildings for which rent is now being paid. The work will be completed within the appropriation made by Congress.

Details of the work of the Department are contained in the accompanying reports of the various Bureaus, Divisions, and Offices, the publication of which in connection with this report is respectfully recommended.

Respectfully submitted.

JAMES WILSON,
Secretary of Agriculture.

WASHINGTON, D. C.,
November 23, 1907.

DEPARTMENTAL REPORTS.

REPORT OF THE CHIEF OF THE WEATHER BUREAU.

U. S. DEPARTMENT OF AGRICULTURE,
WEATHER BUREAU,
Washington, D. C., November 7, 1907.

SIR: I have the honor to submit a report of the operations of the Weather Bureau during the fiscal year that ended June 30, 1907.

Respectfully,

WILLIS L. MOORE,
Chief of Weather Bureau.

Hon. JAMES WILSON, *Secretary.*

RESEARCH AT MOUNT WEATHER.

Americans take pride in the pioneer work that Lieutenant Maury, the naval meteorologist, did in studying the geography of the oceans, and in the achievements of Redfield, Espy, Coffin, and Loomis in the gathering of data and the discussion of the theory of storms; all of which pioneer work by Americans led to the establishing of a National weather service. With the information thus acquired the United States has taken the lead in the practical application of meteorological science, which its own students did so much to discover. Until the creation of the research observatory at Mount Weather, however, this country had been in danger of falling behind Germany and France in the further development of the science that is back of the art which is here so successfully applied.

The present may be said to mark an important epoch in the development of meteorological science in this country. A research observatory has been created at Mount Weather, Va., and a staff of highly trained and ambitious young men has been formed. The first important result achieved by this staff was the sending of meteorological instruments by means of aeroplanes to greater altitudes than has to our knowledge been reached elsewhere. The observations thus made have been continued for over three months in succession, practically without interruption, and it is probable that such record will be maintained indefinitely in the future.

The achievements at this research institution now enable the forecast official at Washington to receive each night the vertical gradients of temperature and the direction of the wind for altitudes varying from half a mile to 2 miles and at times over 4½ miles, and thus to learn something regarding the conflict of currents, their direction and force in the upper regions. These data are of great

value in the making of forecasts for the Middle Atlantic and New England States, and for the elucidation of many problems of the upper air that heretofore it has been impossible to study.

For several years Blue Hill Observatory, near Boston, has made a valuable study of thermal and other conditions of the air at considerable altitudes over Boston. The Government, with its greater facilities, is now reaching greater heights and making a more continuous series of observations. All of the uses to which these data will be applied can not now be determined, but it can be definitely stated that for the first time in the history of meteorological science a chart can be presented to students, and especially to the Government forecasters, showing for each day the conditions of the atmosphere at altitudes which so far have never been approached by any captive apparatus that could be safely and expeditiously returned to the hand of the observer. On October 3, 1907, the world's record for the securing of observations high in the air was broken. On that day the meteorological apparatus at Mount Weather reached an altitude of 23,111 feet above sea level.

Heretofore, as is well known, forecasts of the weather have been entirely based on the horizontal gradients of pressure and temperature as measured at the surface of the earth. The addition of a vertical chart for even one station is considered of great importance. It is apparent that when a comparatively deep stratum of abnormally warm or abnormally cold air persistently overlies a region, the action of a moving cyclone or anticyclone on the weather experienced at the bottom of the atmosphere will be materially different from that which would be experienced were the upper air at a normal temperature. It is also to be noted that where a reversal of the temperature gradients is shown a different forecast would be made than if the temperature uniformly and gradually shaded away from the surface upward. The significance of these data, from the viewpoint of the forecaster, are not yet fully comprehended, but certainly they present a fund of information that will be studied with profit by those whose duty it is to add to our limited knowledge of the science that is back of the art of weather forecasting. One method of utilizing the upper-air observations made at Mount Weather may be illustrated by quoting from the general forecast issued at Washington, at 8 p. m., on October 5, as follows:

The kite flights at Mount Weather, Va., conducted by the Weather Bureau during the last few days, have shown the beginning of the stronger turbulent circulation of winter. The temperature this afternoon, about 1 mile in the free air above the station, was 4° above freezing, with a strong west wind. On October 3 an altitude of slightly over 23,000 feet was reached, at which point a temperature of 5° F. below zero was recorded.

Still later, the general forecast issued at Washington, at 8 p. m., on October 22, contained the following reference to the observations received from Mount Weather:

The temperature conditions to-day in the free air above the Weather Bureau Observatory at Mount Weather, Va., were rather unusual, namely, no diminution of temperature up to 1 mile above the station, and only 18° lower on reaching a height of nearly 2 miles above the mountain. The air at the highest point reached had about the same temperature as was recorded at an equal elevation during the past summer, thus indicating, for the present at least, a high degree of heat in the upper regions of the atmosphere.

In view of the success attained in getting flights to considerable elevations on practically every day, it is confidently expected that with a still further improvement in apparatus it will be possible to study the march of temperature through the various seasons of the year at altitudes heretofore inaccessible, as it is probable that eventually heights of 5 to 6 miles will be frequently attained in the making of these observations. It will be extremely interesting to the forecaster to trace the sequence that certainly exists between the temperature changes at these high levels and those that occur at the surface; especially must we determine the altitudes at which both diurnal and annual variations of temperature cease, and whether, in regions beyond these two variable strata, there is a constant condition, or whether there are variations in the conditions that control the absorption of heat by the upper air, and the relation of these various phenomena to the weather.

A study of the upper-air observations at Mount Weather for a year or two will determine whether or not it is advisable to make kite ascensions at Pikes Peak, Mount Washington, or other elevated places.

Meteorographs and other necessary apparatus are now being made with a view to the exploring of the various quadrants of typical storms in the western region. It is proposed to liberate simultaneously a large number of free balloons, so constructed as to explode as near as may be at some predetermined altitude—probably 10 miles—the object being to secure data, not for the direct purpose of making weather forecasts, but to explore storms and cold waves, so that more may be learned about the exact operations of nature within these atmospheric vortices.

The upper-air work at Mount Weather is especially described here because it is the one line of inquiry that, at present, holds out the greatest promise of immediate utility. The results already secured are deemed to be of such value that it is hoped that means will be provided for the diligent prosecution of other lines of research work. When it is considered that about $1,500,000 is spent annually in applying, at best, imperfect knowledge of the laws of storms to the agricultural, marine, manufacturing, and commercial industries of this country, it would seem to be a wise economy to maintain experimentation at one, at least, of the observation stations of the Bureau; in fact, not to do so might be reasonably considered an unpardonable oversight.

The exploration of the upper air is but one of the many problems the elucidation of which must materially add to the value of the Government Weather Service, and it is hoped that Congress will authorize the completion of the physical laboratory building and the cottage-office building, so that the study of the ionization, electrification, and other physical properties of the air may be prosecuted, and that sky polarization, intensity of light, and cloud density may be measured. It is believed that the results attained will be so valuable to meteorological science and the application of that science to the nation's work, that a final building will be constructed which will have to do with the minute analysis and quantitive measurement of the heat in the air as well as the temperature of the air. Preliminary observations along this line have been made by Mr. H. H. Kimball

for a number of years. His observations, and those of others, clearly indicate the necessity for a careful study of the problems of atmospheric absorption and the diffusion of light and heat, if ever we are to get a clearer understanding of the fundamental problems of the weather.

Aside from the upper-air investigations, research work has been prosecuted during the year along the following lines: (1) Solar radiation; (2) magnetism, and other similar problems in solar physics, a brief discussion of which follows:

SOLAR RADIATION.

A pyrheliometer and a polarimeter have been installed at Mount Weather, and solar radiation observations begun. Absorption screens designed by Ångström for use in connection with his pyrheliometer have recently been received. These enable us to measure the intensity of the solar radiation in the blue-violet portion of the spectrum, which is practically free from band absorption but is especially sensitive to variations in the haziness or dustiness of the atmosphere. It is, therefore, believed that these measurements, in connection with determinations of the total radiation, will enable us to differentiate between the effects of atmospheric absorption due to gases, principally water vapor, and the effects of atmospheric diffusion, which depends largely upon the number of dust particles present. Computations of the solar constant should then be possible with considerable accuracy.

This work requires auxiliary apparatus of greater sensitiveness than has heretofore been employed in solar radiation work, and Professor Humphreys is already in correspondence with instrument makers relative thereto.

A comparison between the results obtained at Mount Weather and at Washington will be of great interest. If the values of the solar constant computed at the two stations are in accord, the establishment of one or two other pyrheliometer stations, probably in the Southwest, where there is little cloudiness, should enable us to compute the value of the solar constant nearly every day and with sufficient accuracy to detect any important variations in it. These results will then be studied in connection with the records of the magnetic observatory.

Aside from the computation of the solar constant, the determination of the quantity of solar radiation received at the surface of the earth, and its variations with the seasons and with atmospheric conditions, will be of value. For this purpose, however, a recording pyrheliometer is desired, and as soon as it is decided which one of the types now available is the most satisfactory an instrument will be purchased and installed at Mount Weather.

As a basis for the radiation work that is to be carried on at Mount Weather, Mr. H. H. Kimball will prepare the three following papers for publication in the Mount Weather Bulletin:

(1) Comparisons between different types of pyrheliometers.

This will include the extensive series of comparative readings made by Mr. Kimball between the Ångström pyrheliometer and the actinometers in use at the Smithsonian Institution. These comparisons are important, in view of the fact that the International Union for

Cooperation in Solar Research adopted the Ångström instrument as its standard, and especially requests comparisons between this instrument and other types.

(2) Observations with the Ångström pyrheliometer at Washington, D. C.

By the new method of reduction recently pointed out by Ångström we are now able to make better use of these observations than heretofore.

(3) The relation between atmospheric transparency and the polarization of blue sky light.

Mr. Kimball has devoted much time to these problems during the past year and has brought to the work talent of a high order.

Observations with the Ångström pyrheliometer and the Pickering polarimeter also have been maintained at the Central Office in Washington throughout the year. The installation of both instruments has been greatly improved, thereby reducing the labor of observing, and the liability of errors in the results. In general the aim has been to obtain observations at noon, and for a sufficient length of time before or after noon, to introduce a variation of at least two atmospheres in the path of the incoming solar radiation, and with intervals between observations equivalent to a change in the length of this path of about 0.05 atmosphere. Observations were made on forty-nine days. On nine of these, however, only short series were obtained; on seven days the series covered the morning hours only; on eighteen days the afternoon hours only; while on twelve days the series of observations extended from early morning until late in the afternoon.

The marked features of the year were the long period from June 25 to October 8, 1906, during which there were no days on which satisfactory observations could be obtained; the unusual transparency of the atmosphere from November 1 to 7, 1907, inclusive; and the low value of the atmospheric transmission factor from April 3, 1907, to the end of the fiscal year.

The two Ångström pyrheliometers of the earlier type of construction, which had been in use since April, 1903, became unserviceable, and were replaced by an improved type of this instrument in October, 1906. Unfortunately, direct comparisons between the two types could not be obtained. However, comparisons have been made through the medium of the actinometers in use at the Astrophysical Observatory of the Smithsonian Institution, so that the continuity of the Washington series of actinometer observations has not been impaired.

Sky polarization is being studied in connection with the total radiation received, and there appears to be a close connection between them, which is well worth following up, since doubtless it is connected with the amount of dust, moisture, etc., in the air.

In interpreting pyrheliometric readings with the view of obtaining the solar constant, it is necessary to know the moisture content of the atmosphere throughout the path of the solar rays observed, and the simultaneous kite observations will be very useful in this connection.

Considerable time has been devoted to the preparation of plans for a solar physics observatory which it is hoped Congress will authorize

to be constructed at Mount Weather. However, no sum for the purpose is included in the estimates of expenses submitted for the coming year, as it is thought to be well to finish the construction and equipment of the physical laboratory before this is begun.

PHYSICS.

Several papers based upon experimental work of an optical nature and of value in connection with solar physics have been published. Others are in preparation, and as opportunity offers additional work will be done in meteorological and solar physics, though, of course, until the solar and physical laboratories are completed and equipped the range of choice in these fields must be very restricted.

MAGNETISM.

The routine work of maintaining the self-registering instruments in operation and making absolute determinations of the magnetic elements at ten-day intervals is being carried on in pursuance of the programme adopted at the beginning of the year. The adjustment of the instruments is practically complete and probably will not need greatly to be changed in the future.

The determination of the value of the various factors that operate to cause variations in the strength of the magnets used in the magnetometers and magnetographs, thus introducing errors into the indications of the instruments, is going forward, though more slowly than was anticipated. The delay in completing the physical laboratory has been an especial hindrance, as it has deprived us of the apparatus with which it will be equipped and has thereby compelled the use of slow, laborious, and, as the results show, insufficiently precise methods. Suitable apparatus for these special purposes has therefore been asked for, and this work will be completed on its arrival.

The importance of these constants will be appreciated on realizing that the indications of the magnetic instruments are the result of an interaction between a magnet and the earth, which is itself a great magnet. The variations in the magnetism of the earth would be truly shown if the magnetic strength of the magnetic needle remained constant. This condition is not realized, however, as the magnetic moment of a steel magnet decreases with age, varies inversely with the temperature, and varies with the strength of the earth's field. The law of each of these and of several more such factors must be discovered for each separate magnet by a series of experiments in which each disturbing force is carried through a gamut of changes, while all other variables are held constant, or separately observed so that they may be eliminated.

It should be understood that while we are without a satisfactory knowledge of these constants as yet, the observations and records are being made in such form that they can be reduced to absolute measures as soon as the values of the various constants are known.

An intercomparison of the instruments at this observatory with those of the Cheltenham Magnetic Observatory of the United States Coast and Goedetic Survey has been made, and the results now being deduced indicate that, while the absolute values are different, the

variations are identical at the two observatories. This indicates that the location of the magnetic observatory at Mount Weather is entirely satisfactory, since it was designed primarily to furnish immediately available data for the study of problems in the dynamic meteorology of the earth, particularly as influenced by the various activities of the sun, and not for the purpose of attacking purely statistical problems, requiring a long series of observations.

In the present incomplete state of this observatory, lacking as it does the parts with which the magnetic observatory was designed to cooperate, viz, the departments of solar physics and atmospheric electricity, it is hoped that we may secure, by cooperation with the Naval Observatory and other places, the data required in certain investigations that we wish to take up in connection with the magnetic work.

Among the available problems, an exact quantitative investigation into the relation between sun spots and magnetic storms seems very promising. Considerations in the light of the electron theory lead inevitably to the conclusion that the intimate relation that has long been known to exist between the variations of terrestrial magnetism, and various solar phenomena, especially sun spots, arises from the bombardment of the earth by electrons discharged from the sun. Discoveries of the utmost importance to meteorology, terrestrial magnetism, and atmospheric electricity are certain to ensue as the result of exact study in this field.

The comparative examination of meteorological and magnetic phenomena will, it is believed, bring to light interesting interrelations, particularly as it is now known that the atmosphere carries immense numbers of electrons that are not only active in producing variations in the magnetic field of the earth, but, as nuclei for condensation, enter intimately into a great variety of meteorological processes. Such effects, however, are difficult of detection for the reason that they are relatively small, and very accurate observations of both the meteorological and the magnetic elements will be required to separate them. It is also possible that a comparison of the variations of the solar constant with the magnetic variations will reveal a correspondence between the two phenomena that will thus provide a terrestrial index of the variations in the energy emitted by the sun, and perhaps also of the long period variations in terrestrial climatic conditions.

These are the problems in mind and toward the ultimate solution of which, however far off, our work is being directed.

DESTRUCTION OF THE ADMINISTRATION BUILDING.

About 4 o'clock in the morning of October 23, 1907, the interior of the administration building was discovered to be in flames. The fire spread so rapidly that the eight persons sleeping in the building that night barely escaped with their lives, two being seriously injured. It has been impossible to determine the origin of the fire. This building was used as an ordinary weather observing station, such as is maintained at all of the various meteorological reporting offices of the Bureau. It also contained the administrative offices and the kitchen, dining, sleeping, and general living rooms of the scientific staff. Since the fire kitchen and dining rooms have been temporarily pro-

vided in the upper part of the stable, and sleeping rooms have been fitted up in what was once the farm cottage. It is hoped that an appropriation for the reconstruction of the administration building will be made available as soon as the appropriation bill for the support of the Department becomes a law. When the structure is rebuilt it should be made entirely of fireproof material. At a later period tentative plans will be prepared so that an estimate can be secured of the cost of reconstructing the building.

FORECASTS AND WARNINGS.

During the last year the area from which daily meteorological observations are received by telegraph has been extended to include stations in European and Asiatic Russia, Iceland, the Faroe Islands, and Nome, Alaska. Isobaric charts of the Northern Hemisphere, based upon these reports and upon telegraphic observations received from selected points in western Europe, the Azores, Bermuda, the West Indies, Mexico, Honolulu, and in the United States and Canada, have been prepared daily and employed with gratifying success in the preparation of practice or experimental forecasts for periods of five and six days in advance.

The tropical hurricanes of September and October, 1906, were the most important storms that have occurred in American waters in several years. The first of these storms appeared east of Barbados, West Indies, August 31, moved thence northwestward to a point off the northern Bahamas, where it recurved to the northeastward during September 6 and 7, and passed west and north of Bermuda during the 9th. The storm was exceptionally severe in the trans-Atlantic steamer routes during the 10th and 11th, and apparently passed north of Scotland on the 15th. From the first appearance of this hurricane until its final disappearance over the north Atlantic Ocean its character and course were accurately defined in dispatches that were telegraphed daily to American and West Indian ports. The American consul at St. Thomas, West Indies, wrote under date of September 4, 1906:

> * * * Your timely warning has saved millions to shipping in this harbor. * * *

The Weather Bureau observer at San Juan, P. R., reported:

> * * * The storm apparently followed the course forecast in the message received September 1. All vessels were advised to remain in port; the advices were heeded, and no material damage has been reported. * * *

On the morning of the 8th, when the storm had completed its recurve to the northeastward, Lloyds, London, was cabled that a tropical disturbance was approaching Bermuda from the southwest. On the following day the storm raged with great intensity in the region about Bermuda, and during the 10th and 11th showed exceptionally low barometric pressure, and was attended by gales of hurricane force over the mid-Atlantic Ocean.

A disturbance that had apparently developed in the wake of the hurricane above referred to advanced northward from the West Indies over and east of the Bahamas from September 13 to 15, and then recurved westward to the Atlantic coast, north of Charleston, S. C., by the morning of the 17th. The subsequent course of this

disturbance was northwestward over the interior, where it possessed but slight energy. It recurved northeastward over the lower Ohio Valley during the 18th and 19th and reached Nova Scotia on the 21st.

The severest Gulf storm since the Galveston storm of September, 1900, advanced from the western Caribbean Sea northward to the Gulf coast, near and west of Mobile, from September 23 to 27. The accurate and timely warnings in connection with this storm were, so far as known, heeded, and the great damage done by the storm to vessels in harbors of shelter indicates the almost inevitable fate of vessels whose masters may have ignored the warnings. Detailed descriptions of these storms are given in the Monthly Weather Review for September, 1906.

During the second decade of October, 1906, a tropical storm of great intensity advanced from the western Caribbean Sea northeastward near and east of Havana and Key West. This storm caused great damage to the property of the Florida East Coast Railway along the extension from the peninsula to Key West. House boats for workmen of this road were swept away and many lives lost. Warnings of this storm were timely, and every effort was made to give them the widest possible distribution.

The particular new work of this division during the coming year will be the diligent study along practical lines of the problem of forecasting general and important weather changes and conditions for periods of a week or more in advance.

SEISMOLOGICAL OBSERVATIONS.

In my annual report for last year attention was called to the increasing importance of systematical seismological observations. Only a short time before that report was written an unparalleled seismic disaster laid San Francisco and other cities in central California in ruins. Exactly four months later a strikingly similar convulsion of nature devastated Valparaiso and vicinity. Still later—namely, on January 14—the city of Kingston, Jamaica, was laid waste, and, finally, on the 14th of April a violent seismic disturbance was central in southwestern Mexico, where great damage and loss of life resulted.

The scientific world is now fully aroused to the importance of systematically observing and studying these natural phenomena of such vital consequence to the welfare of the people, for it is clearly recognized that with adequate data in hand the people can be advised how best to select and locate their habitations and how to construct them to best resist the disturbances to which they may be subjected.

Exact knowledge of the character and magnitude of the motion of the ground when subjected to earthquake action is of vital importance to architects and structural engineers whose business it is to design and erect the enormous structures now so numerous in all our great cities. One of these modern buildings often houses a small army of people, whose safety depends in a great degree upon the power of the structure to resist the forces that may assail it. Earthquake-proof construction must be required, especially in great structures, even in regions which may seem to be immune, for probably it is only a question of time when some readjustment of the earth's strata under long accumulating stresses may occur in seemingly the most stable regions and an earthquake of greater or less severity be precipitated thereby.

The data required by engineers and architects to enable them to properly handle the problem presented to them is at present very meager, vague, and indefinite. In my last annual report I mentioned that an International Bureau of Seismology had been organized, with headquarters at Strasburg, the objects of which, in general, are to bring about the systematic observation and study of all seismic phenomena throughout the world. The United States Government is a member of this organization and is represented by Prof. H. F. Reid, of the Johns Hopkins University, Baltimore. At the present time, however, no organized establishment exists for the systematic observation and registration of earthquakes within the United States.

Earthquakes are great natural phenomena and the disasters at Charleston, in California, Chile, Jamaica, Mexico, and elsewhere demonstrated how much the interests of the whole people are affected by them. The scientific and systematic observation of earthquakes is now a recognized necessity. It is submitted that this important work, since it affects the welfare of all the people, devolves upon and should be undertaken by the National Government; and, furthermore, it is urged that the Weather Bureau be authorized to inaugurate and maintain systematic seismological observations within the United States and its Territories. In support of this recommendation, I desire to invite attention to the resolutions passed by the seismological committee of the American Association for the Advancement of Science in a meeting held in Washington on April 19, 1907, as follows:

(1) In the judgment of the committee, its functions should be regarded as initiatory and advisory.

(2) In the judgment of the committee, the time has come for asking the support of the Federal Government in seismological work.

(3) This seismological work requires a cooperation of the various scientific bureaus of the Government.

(4) The appropriations for seismological stations, should be made through the United States Weather Bureau, and the results of the observations should appear in its publications.

(5) A committee of three, to include the chairman of the committee, should confer with the Chief of the Weather Bureau, the Superintendent of the Coast and Geodetic Survey, and the Director of the Geological Survey with reference to framing the legislation providing for seismological stations and the publication of observations, as recommended in the preceding resolution.

In the deliberations of the committee it was clearly recognized that the Weather Bureau already has numerous stations widely distributed over the country, and maintains a corps of highly trained observers on duty at all times. By reason of this existing equipment the Weather Bureau is peculiarly prepared to include seismological observations in its work at the minimum cost of maintenance.

THE INVESTIGATION OF EVAPORATION IN CONNECTION WITH THE SALTON SEA.

While several studies have been made in the United States and Europe regarding the laws of evaporation over large bodies of water, the results have not been sufficiently in agreement to be satisfactory for the deduction of a proper system of laws designed for practical uses by engineers and meteorologists. The recent formation of a large lake of fresh water in the Salton Sea, southern California, caused by the overflowing of the Colorado River, affords an unequaled

opportunity to take up the study of evaporation phenomena on a large scale under remarkably favorable conditions.

The Salton Sea is now 45 miles long, contains 440 square miles of surface, which is 205 feet below the sea level, the bottom of the lake being 287 feet below the mean level of the Pacific Ocean, and it will evaporate at the rate of about 8 feet per year.

Mr. G. K. Gilbert, of the U. S. Geological Survey, proposed that this unique opportunity be embraced, especially in view of the facts that the Salton Sea lies in a dry climate, where evaporation is vigorous, where there is little rainfall, and only a small inflow of water from the New and the Alamo rivers, which can be readily measured, so that the evaporation conditions are comparatively free from complications. In order to study the possibilities of the case a board, consisting of Prof. F. H. Bigelow, U. S. Weather Bureau; Mr. G. K. Gilbert, U. S. Geological Survey, and Mr. C. E. Grunsky, U. S. Reclamation Service, proceeded to Yuma, Ariz., and in May, 1907, inspected the entire region carefully, making a favorable report on the undertaking. Some valuable preliminary experiments were made at Reno, Nev., during the summer, and next year it is proposed to install a chain of stations around the Salton Sea on a comparatively simple plan for the first year's work, and then proceed to a more elaborate campaign during the second and following years, as experience suggests shall be appropriate.

The rainfall and the evaporation are the two great factors which determine the amount of water available for irrigation purposes and for the supply of water that passes from the watersheds to the navigable rivers as floods or as normal stages, so that the engineers demand reliable data on this subject, which it is not at present possible to supply. While the Weather Bureau collects rainfall data in all parts of the country, there is nothing being done on the evaporation side of the problem, but it is hoped in the course of a few years to be able to add to our existing service the proper observations on evaporation, such as will enable us to publish a monthly map of evaporation to be used in connection with the rainfall map now being issued every month. In addition to the needs of the engineer, it is recognized that evaporation is an important factor in the economy of plant life, so that the agriculturist should have access to suitable information regarding the amount of the loss of water in this way. This is especially true for the region west of the Mississippi River, where projects are under way that have such an important bearing on the future industrial development of that vast region, rich, as it is, in possibilities for the future. The introduction of the date palm industry in the immediate vicinity of the Salton Sea calls for special meteorological observations, because the maturing dates are very injuriously influenced by moisture in the air, such as may be produced by the evaporation of the sea or of irrigated fields.

The preliminary report of the board is as follows:

REPORT OF BOARD ON EVAPORATION STUDIES IN SALTON BASIN, LOS ANGELES, CAL., MAY 20, 1907.

In compliance with instructions received, the undersigned, F. H. Bigelow, representing the United States Weather Bureau; G. K. Gilbert, representing the United States Geological Survey, and C. E. Grunsky, representing the United States Reclamation Service, met at Yuma, Ariz., on May 12, 1907, for the

purpose of outlining the scope and methods of an investigation of evaporation in connection with the drying out of Salton Sea, California. An organization as a conference board was effected by electing F. H. Bigelow chairman, and with all members participating the board was in session from day to day at various places in Salton Basin, and held a final session at Los Angeles.

It was recognized in advance that in order to determine the law which controls evaporation and thus utilize to the fullest extent the opportunity afforded by the drying out of the lake, the meteorological conditions at and near the lake must be thoroughly investigated, and it was early apparent that financial considerations would make it impossible to install and put in operation at once the fully equipped stations required for this purpose. The board, therefore, has given special consideration, first, to the work which should be immediately undertaken with means now at command, and, second, to the scope of the work as it should be carried out when suitable financial provision shall have been made.

The board confirms the conclusion reached by the earlier conference committee, that the Weather Bureau should direct the making of observations and should have primary charge of working up results.

Both the Geological Survey and the Reclamation Service should cooperate in the work to the extent found practical from time to time, and both of these Bureaus should remain in close touch with the work. For this reason it appears a wise provision to have the scope of the work and the methods of observation passed upon from time to time by this conference board, which should be continued indefinitely for this purpose.

It is foreseen that after the observations have been established on a comprehensive basis, they should be continued without interruption for two or three years; whether for a longer period can not be determined until the results of two years' observations become available.

The board desires to express its appreciation of the preliminary work done in connection with this subject by the United States Geological Survey, which, upon a first suggestion that such a study should be made, at once ordered an examination by W. F. Martin, whose exploration of the shores of the sea and of the conditions of run-off from the surrounding country greatly simplified our own investigations. We found it necessary, however, to have personal knowledge of the physical condition of the country surrounding the large body of water, and also to know something of the condition which led to the formation of the lake, and to understand the present situation at Colorado River, which if modified, may affect the accession to the waters of Salton Sea. Consequently, an inspection was made of the works which turned the Colorado River back into its proper channel, and of the levees extending some 10 miles beyond the lower Mexican heading which is intended to reduce the annual overbank flow toward the west and north.

The board visited the margin of the sea at its southern extremity and at several points on the east and northeast along the line of the Southern Pacific Railroad, notably at Durmid and at Salton. Inquiry and personal investigation were also made of the suitability of Yuma, Mammoth Tank, Brawley, Mecca, Indio, and Edom as stations for the meteorological observations required in connection with the direct observation of evaporation and with the study of the effect of a large body of water upon the rate of evaporation.

As a result of these examinations and upon consideration of all circumstances affecting the problem, the board recommends as follows:

First. That the United States Geological Survey make gagings of all visible inflow of water into the lake.

Second. That the United States Geological Survey furnish such facts as are ascertainable relating to probable loss of water into underground strata or relating to accession of water from underground sources.

Third. That the United States Weather Bureau immediately—

(*a*) Raise the standard of its local office at Yuma.

(*b*) Establish stations at Durmid or Salton, at Brawley, and at Edom, and improve the service at Mammoth Tank, Mecca, and Indio, so as to secure from each of these stations the dry-bulb temperature, the wet-bulb temperature, the direction and force of the wind, the rainfall, the barometric pressure, and the evaporation from a Piche evaporometer.

(*c*) Establish evaporation pans at Yuma, at Mammoth Tank, at Brawley, at Mecca, at Durmid, if possible on land and afloat, and at Edom.

(*d*) Keep a record of water stage and water temperature at the railroad trestle near Durmid.

(*e*) Conduct experiments at any convenient point for the preliminary determination of additional factors influencing the rate of evaporation.

(*f*) Plan such self-registering apparatus as should be available for use in a thoroughly equipped evaporation station.

Fourth. That an appropriation be requested from Congress, for the Weather Bureau, to be used for continuing and expanding the observations at the points above mentioned; for the establishment of one or more thoroughly equipped stations in the Salton Basin at which all phenomena affecting evaporation are to be studied; for the continuous determination by automatic gauge of the lowering of the water surface of Salton Sea by evaporation, and for the compensation of all necessary assistants required in making, reducing, and discussing the observations.

The sum of money that should be set apart for this work at the next session of Congress is $25,000.

This estimate is based on a tentative plan of operation which remains subject to such modifications as the first year's experience may show to be necessary.

The estimate includes an item of $12,000 for installation and $13,000 for salaries, rents, and supplies. The item for salaries includes compensation at $1,500 per year for a physicist in the field, and compensation for two clerks at $1,200 each for the Washington office of the Weather Bureau; this item also includes $1,500 for laboratory experiments and the necessary incidental expenses.

FRANK H. BIGELOW,
Professor, United States Weather Bureau.
G. K. GILBERT,
Geologist, United States Geological Survey.
C. E. GRUNSKY,
Consulting Engineer in the United States Reclamation Service.

IMPORTANCE OF THE PROPOSED INVESTIGATION—HISTORY OF THE SALTON SEA.

Salton Basin, in the extreme southeastern part of California, is a depression below the level of the sea, its lowest point being 287 feet below mean tide. The basin is separated from the Gulf of California by the delta of the Colorado River. In past times the river has flowed alternately to the gulf and to the basin. Four years ago all the water of the river flowed to the Gulf of California and the basin was dry. A canal made for irrigation purposes, leading water from the river toward the Salton Basin, became enlarged in time of flood and passed beyond control, so that after a few months the entire river discharged to the basin. For more than a year it flowed in that direction, and it was finally brought under control only after strenuous effort. The river has now been returned to its former channel and discharges into the Gulf of California, excepting a small portion employed for irrigation in the "Imperial Valley," this being the name given to that part of the river delta which slopes toward the Salton Basin.

While the river flowed into the Salton Basin, it gradually flooded the lower part of the basin, so that now there is a lake or sea about 80 feet deep with a surface area of 440 square miles. As important interests are involved, it may be assumed that the river will be restrained from again invading the basin and that the lake which now exists will gradually dry away, its dissipation requiring between ten and fifteen years.

NEED FOR THE INVESTIGATION OF EVAPORATION.

In the construction of reservoirs, for whatever purpose, it is necessary to make allowance for evaporation in order to determine in advance what will be the available supply of water. In the work of the Reclamation Service the allowance for evaporation is often very large and affects the plans and estimates of cost in important ways. It is always a factor to be considered in estimating the available supply obtainable from a reservoir of known capacity, and is likewise a factor used in determining the height of a dam of greatest storage efficiency. The exposure of an unnecessarily large area behind a dam of too great height may result in excessive wastage of the supply. Moreover, an inadequate allowance for loss by evaporation from the reservoir surface leads to erroneous assumptions concerning the water which can be made available for useful purposes.

Unfortunately the rate of evaporation for different climates is not well known, so that at present it is impossible to make estimates with desirable precision. It is known that the rate of evaporation in any locality depends on certain factors, namely, the temperature of the air and water, the dryness of the air, and the velocity of the wind; but the nature of the law or formula connecting the evaporation with these factors is not known. Various attempts have been made to determine it, but the results are so discordant that little confidence is felt in any of them. It is known also that a formula for evaporation derived from experiments with a small water surface—such as that afforded by a tank, for example—can not be applied directly to the computation of the evaporation from a reservoir or lake, because the larger bodies are differently affected by the wind. As the air moves across a reservoir and gradually becomes charged with moisture its rate of absorption diminishes, and the average rate of evaporation from a broad surface is therefore less than from a small surface. For this reason the formula for evaporation can not be put on a sound basis without taking account of large water surfaces as well as small. Attempts to measure evaporation from lakes and reservoirs have heretofore been hampered by the difficulty of accurately measuring inflow and outflow so as to distinguish the various factors determining changes in the level of water surfaces.

AVAILABILITY OF THE SALTON SEA.

The conditions afforded by the Salton Sea are particularly suitable for the investigation of the laws of evaporation. The amount of water flowing into it is small and can readily be measured. The rainfall is nominal in amount. No water flows out of it. The climate is so dry that the total evaporation in the year will probably amount to 6 or 8 feet. It is, therefore, possible to determine by gauging the actual rate of evaporation, and to make this determination with a high degree of precision. By making the gauging continuous, and by making simultaneous observations of the temperature, atmospheric humidity, wind, etc., the relations of evaporation to these several factors can be made out. It is possible, also, by a suitable arrangement of details and by the use of evaporation tanks, to take account of the relation of evaporation to the size of the evaporating surface.

By the reason of the dryness of the local climate the evaporation rate in the Salton Basin is unusually high. Therefore, a formula based on observations at this place will have such range as to be available for all cases likely to arise.

It is especially to be noted that the opportunity given by Salton Sea is both temporary and unique. In ten or fifteen years the sea will have disappeared, and in a somewhat shorter period its waters will have become so saline that its rate of evaporation will no longer be normal and representative. It is not to be restored if the resources of the engineer can prevent. Moreover, the combination of physical conditions and events by which the sea was created is so peculiar as to warrant the belief that it is not duplicated elsewhere. It is certainly not to be found in the United States. Unless use is made of the present crisis in the history of the basin the opportunity will be lost.

With reference to the practical value of the proposed investigation of evaporation, Mr. M. O. Leighton, Chief Hydrographer of the United States Geological Survey, writes as follows:

It is of utmost importance to all water supply installation to have the rate of evaporation under fixed and variable conditions determined. A few practical illustrations: It has been estimated that the evaporation in southern Arizona is equivalent to about 6 feet per year. Whether or not this is true we do not know. Assuming, however, that the figure is a fair approximation, the amount of water lost from the Roosevelt Reservoir, surface extent, 16,320 acres, will be 97,920 acre-feet, sufficient to irrigate 48,960 acres, assuming a duty of water equivalent to 24 inches per annum. The same computations may be made with respect to all the great reservoirs in the arid West. It will, therefore, be seen that in computing the area to be reclaimed under the Roosevelt Reservoir it was necessary to deduct nearly 50,000 acres from that which might have been reclaimed had it not been for evaporation. The Sweetwater and Otay reservoirs, in the San Diego region, in southern California, have never performed the duty that was expected of them. Indeed, during the greater part of the time since they were constructed they have been empty or only partially filled. The evaporation from these reservoirs is enormous, and it is highly probable that had there been any worthy information concerning the rate of evaporation at those points it would have been appreciated that the drainage areas would not provide for actual use an amount of water equivalent to the storage installation. In other words, the plans would have been entirely changed and a large amount of money would have been saved.

The above constitute two typical instances of the practical importance of determining all the factors connected with evaporation. If the facts were known the engineering profession would probably change its ideas with reference to economic depth of water stored, and shallow areas within reservoirs at which it is assumed that evaporation may be greatest would be avoided. If the effects of winds were known, ideas with reference to the proper location of reservoirs would probably be changed, and there would be some useful study and experimentation with reference to the effect of wind-breaks, etc. In fact, we can only generalize about the matter, even as it is necessary to generalize with reference to the methods of evaporation study. Each reservoir in the West is subject to great loss. We do not know how much, but it is apparent that did we know, subsequent work of this character would be more intelligently carried on.

FOREIGN METEOROLOGISTS STUDY AMERICAN WEATHER SERVICE.

It is probable that no other branch of science is as much indebted to the researches of citizens of the United States as is meteorology, Redfield and Espy, early in the nineteenth century, having been the first to collect the data, plat it, and exhibit to the world the cyclonic action of storms. Utilizing the knowledge thus made known and

the further researches of the scientists of other nations, the United States has taken the lead in the practical application of meteorological science, its broad continental area and thorough electrical communication rendering it possible to bring an extensive system under one administrative head. The service is the result of an evolution, it being necessary to adopt new methods with each advancing step and to devise and invent appliances for putting into effect ideas that were unique. It has also required the application of discipline of military exactness in order to coordinate into an efficiently working machine 200 full meteorological offices, with more than 900 auxiliary stations, and to produce an efficiently working unit that shall twice daily gather meteorological data from such a large area, collate and print it at many commercial centers, and, through the agency of the press, the telephone, and the rural free delivery, place the deductions from the data before those who can make the most use of them.

Within recent years many scientific representatives of foreign governments have honored us by visits and by a study of the methods employed by the United States in the administration of its Weather Bureau. They have also extensively used the technical library of the Bureau.

Reference is made below to some of those who have studied our methods.

In 1903 Mr. Gilbert T. Walker, the then newly elected director of the British-Indian Meteorological Service, came to this country to study our system of forecasting before assuming his new duties.

During the years 1890–1893 Rev. José Algué, director of the Philippine Meteorological Service, spent several months examining the work of the Weather Bureau both at Washington and at some other stations before taking charge of the Manila Observatory. Similar studies were also made by himself and Father J. Clos, in 1900, preparatory to remodeling the work of the Philippine Weather Bureau in accordance with plans drawn up jointly by Father Algué and the Chief of the United States Weather Bureau.

During 1903–1906 several meteorologists of Japan, including especially Dr. S. Tetsu Tamura, took advantage of the facilities offered by our extensive meteorological library and by our professional staff to study the distinctive features of our service.

In 1906 Prof. Manuel E. Pastrana, director of the Central Meteorological Office of Mexico, devoted much time to the study of the methods of our administration.

During 1906–7 Father José Coronas, of Manila, spent some time studying the Weather Bureau forecast service. Unfortunately, his studies were interrupted for a considerable time by a serious illness.

In 1907 Dr. P. Polis, an eminent meteorologist connected with the German Government and forecast service, paid this country an official visit, and during a period of two months made an exhaustive study of our system, both at the Central Office in Washington and throughout the country.

RIVER AND FLOOD SERVICE.

The year was an active one for the River and Flood Service, both as to details of administration, the occurrence of floods, and the work of forecasts and warnings in connection therewith.

A new river district center was established on May 1, 1907, at Phoenix, Ariz., with territory comprising the watershed of the Gila River. This territory was formerly a portion of the Denver, Colo., district, and was assigned to Phoenix for greater convenience of administration and increased efficiency in the matter of distribution of flood warnings. Several new stations were also located on the Colorado River and its confluents, the Green and Grand rivers.

The steady development of agricultural industries, largely the result of the reclamation work of the General Government, now under way in the valley of the Colorado River and its principal tributaries, carries with it a demand for detailed and reliable information as to the quantity of water to be expected during the growing season, as well as for warnings of the disastrous floods that have in late years occurred with considerable frequency. It is believed that the Weather Bureau can be of material assistance in this work with the facilities now in hand, although opportunities will doubtless be afforded for much greater usefulness as means of rapid communication develop.

Twenty-three special river and twelve special rainfall stations were established during the year, principally in the watersheds of the Colorado, Sacramento, and San Joaquin rivers.

Four special river and seven special rainfall stations were discontinued without impairment of the efficiency of the service.

The district of Sacramento, Cal., is now in excellent condition and performed efficient service during the flood of March, 1907, the greatest flood in the history of the State. A considerable number of new stations was established in this district, and it is thought that with the addition of a few more this service will be thoroughly equipped for any future contingencies.

By reason of the great amount of commerce carried upon them and the enormous property values affected by overflows, the Ohio River and the Mississippi River below Cairo, Ill., easily make the largest demands upon the labor, time, and money of the river and flood service. The present service is adequate so far as the work of actual forecasting is concerned; there is, however, a constant demand for increased service from many important cities and towns that are not special river stations. These places not only wish flood warnings, which they now receive, but also daily information as to the stage of the water at the different places, claiming that such information would be of the greatest assistance to the navigation interests. The claim is well founded and it is intended that such provision be made as will admit of the publication of a daily river bulletin at the more important river cities and towns where such service is not now provided, the data to be telegraphed or telephoned each morning from the nearest Weather Bureau center. The value of such service is practically beyond question, and its establishment would simply fulfill the legitimate desire of the people interested.

It may be necessary in a year or two to make some provision for river service in the watershed of the Yukon River for the benefit of the navigation interests. The subject has been informally brought to the attention of the Weather Bureau with some tentative suggestions, but it is not proposed that anything shall be done during the next fiscal year.

It is also becoming apparent that some additional service will probably be necessary in the future along the large tributaries of the Arkansas River, such as the Cimmaron, and both forks of the Canadian, and possibly along the Red River above Denison, Tex. Such a service should prove of much value to the increasing agricultural interests of Oklahoma and Indian Territories, and the question will be made a subject for further consideration.

The great floods of the year were three in number, all occurring between January and March.

The first was that of January and February in the Ohio and lower Mississippi rivers, when stages in the former river were the highest of record, with the exception of those of 1883 and 1884, the records covering a period of nearly one hundred years.

The warnings issued by the Weather Bureau in connection with this flood were accurate both as to time and stage, and were the direct means of saving an immense amount of property. The Cincinnati Price Current in an article on the flood stated that—

> The Weather Bureau office at Cincinnati has rendered very important service incident to the flood conditions, in furnishing current information and in pointing out what might be expected. The gradual rise, with the warnings, made it possible to do a great deal preparatory to conditions of inundation.

There were numerous testimonials of a similar character from Pittsburg to New Orleans, and under date of February 9, 1907, the New Orleans Times-Democrat said:

> The river reached 19 feet here yesterday, as forecast by the United States Weather Bureau eleven days ago. The forecasts have been exceptionally accurate, both as to the expected stages and the time of their occurrence.

The second great flood occurred in the Valley of California, beginning early in February. This flood was the greatest in the recorded history of the State of California; it flooded 300,000 acres of reclaimed land and caused a loss of or damage to property amounting roughly to $5,000,000. The warnings issued were accurate; the service was satisfactory to a high degree, and brought forth many expressions of commendation and appreciation.

The third flood occurred during March in the Ohio River, particularly along the upper portions, and at Pittsburg the water reached the highest stage of record. The usual warnings were issued promptly, but skepticism on the part of some persons unacquainted with the true facts resulted in considerable damage that might otherwise have been avoided.

Another flood deserving of mention was that caused in January by the great ice gorge in the Grand River of Michigan. The service performed during this flood was of the highest character, and to the official in charge of the river district of Michigan were tendered the thanks of both the citizens of Grand Rapids assembled in mass meeting and of the common council of the city.

CLIMATOLOGICAL SERVICE.

The Climatological Division is charged with (1) the collection and publication of climatological data, and (2) the distribution of forecasts and special warnings. Under the first-named heading may be classed:

(*a*) Cooperative stations, of which there are more than 3,600.

(*b*) Cotton, corn and wheat, and sugar and rice region stations, and the publication at district centers and selected Weather Bureau stations for the period from April to October of daily bulletins showing the temperature and the precipitation for the growing fields.

(*c*) The monthly and weekly publications of the several sections of the Climatological Service, including the monthly snowfall bulletins of the States of the Rocky Mountain and Plateau regions for the period from December to March.

(*d*) The preparation of the National Weekly and Monthly Weather Bulletins, and the weekly Snow and Ice Bulletins, issued during the winter months.

COOPERATIVE STATIONS.

As for several years past, the object has been to increase the accuracy of the observations at the cooperative stations, rather than to increase the number of stations, which is somewhat smaller than at the close of the previous year, 250 having been established and 270 discontinued for various reasons. Practically all of these stations are now equipped with standard instruments, which are exposed in an approved manner. One hundred and seventy-seven stations were visited by section directors for the purpose of inspection.

COTTON, CORN AND WHEAT, AND SUGAR AND RICE REGION STATIONS.

The number of cotton region stations (144) is the same as at the close of last year, 3 having been established and 3 discontinued. They are grouped under the same district centers as last year, 13 in number, namely: Atlanta, Augusta, Charleston, Galveston, Little Rock, Memphis, Mobile, Montgomery, New Orleans, Oklahoma, Savannah, Vicksburg, and Wilmington. Other Weather Bureau stations issuing daily bulletins, containing for the most part the averages of temperature and rainfall of the various districts only, are: Birmingham, Charlotte, Chattanooga, Cincinnati, Fort Worth, Macon, Meridian, Norfolk, Raleigh, St. Louis, San Antonio, Shreveport, and Taylor. The average edition of the daily bulletin is 33, the greatest issue being that from Memphis, 77. The data supplied by these stations continue to be of great value to those interested in the production of cotton and other crops. The rigid rules with regard to the time of making the bulletins public, namely, 11 a. m., seventy-fifth meridian time, have been strictly adhered to. Nine stations in the sugar and rice region of Louisiana report to the New Orleans cotton region district center and their observations are published in the cotton region bulletins issued for that center.

The number of corn and wheat region stations (134) is also the same as the close of last year, 1 having been established and 1 discontinued. These stations are identical in character with the cotton region stations and cover the great cereal producing belt. They are grouped under 9 centers, as follows: Chicago, Columbus, Des Moines, Indianapolis, Kansas City, Louisville, Minneapolis, Omaha, and St. Louis. Duluth, Peoria, and Topeka issue bulletins containing the district averages only. The average edition of the daily bulletins is 66 copies, the maximum number, 134, being issued from Kansas City.

CLIMATOLOGICAL PUBLICATIONS.

The monthly reports and annual summaries of the 44 sections of the Climatological Service have been published without change in form. The monthly reports in all but two instances consist of eight page publications, containing charts of mean temperature and total precipitation, tables of miscellaneous climatological data, daily temperature extremes, and daily precipitation, together with two pages of descriptive text. Owing to rigid economy and a careful system by which the mailing lists are purged of the addresses of those not specially interested in these publications, the total edition is somewhat less than at the close of last year. These reports continue to supply to varied and important interests reliable climatological information for nearly every part of the United States. They have been published with the usual promptness, the majority making their appearance before the 20th of the month succeeding that to which they pertain, and the remainder, with the exception of that of Hawaii and a few issued at the expense of their respective States, are usually printed within thirty days after the close of the month to which they pertain. The section publications are closely scrutinized by the Climatological Division of the Central Office, with a view to maintaining a creditable literary standard as well as to insure accuracy in the publication of the meteorological statistics and sound conclusions in the discussions presented.

The weekly weather bulletins of the several sections have been regularly published. The elimination of the crop feature has caused a decrease in the number issued, as indicated by the reduction in the combined edition, which is about 4,000 less than it was at the close of the preceding year. The National Weather Bulletin, issued from the Central Office, continues to supply valuable information. It presents geographically the distribution of temperature and precipitation, a discussion of these elements, and a brief summary of the weather conditions prevailing during the week or month in each State. The edition of this publication on June 30, 1905, was 4,600; on June 30, 1906, it was 2,560; and on June 30, 1907, only 2,200. It is likely, however, that there will be no further decrease, which was occasioned by the elimination of the crop feature from the report.

The weekly Cotton Region Weather Bulletin was issued regularly from the New Orleans office, as heretofore. This publication contains two charts showing, respectively, the departures from the normal temperature and the total precipitation for the States comprising the cotton belt, a brief summary of the general weather conditions, and duplicates of the telegraphic weather summaries for cotton States as published in the National Weather Bulletin.

The following table shows for each section the number of cooperative observers, the number of weather correspondents, and the editions of the weekly weather bulletins and monthly climatological reports:

Cooperative observers, weather correspondents, and editions of climatological publications.

Section.	Number of—		Publications issued.	
	Cooperative observers.	Weather correspondents.	Weekly bulletins.	Monthly climatological reports.
Alaska	40			
Alabama	37	95	500	500
Arizona	77	110	600	600
Arkansas	68	61	520	650
California	350	50	500	700
Colorado	93	34	300	700
Florida	58	60	725	400
Georgia	42	150	1,000	920
Hawaii	143	53	313	376
Idaho	56	76	600	450
Illinois	90	90	820	450
Indiana	59	149	620	725
Iowa	123	400	2,600	2,600
Kansas	91	85	1,500	1,250
Kentucky	44	44	415	515
Louisiana	42	71	500	700
Maryland and Delaware	49	65	400	375
Michigan	115	124	548	950
Minnesota	70	60	600	400
Mississippi	64	85	700	550
Missouri	82	111	500	457
Montana	83	120	600	600
Nebraska	150	404	740	585
Nevada	44	46	150	300
New England	132	50	350	700
New Jersey	42	55	500	325
New Mexico	87	70	1,100	1,000
New York	125	122	875	825
North Carolina	61	118	500	1,050
North Dakota	85	36	500	500
Ohio	98	115	850	550
Oklahoma and Indian Territory	66	190	700	650
Oregon	83	32	500	750
Pennsylvania	87	65	350	600
Porto Rico	41	25	135	375
South Carolina	32	50	480	476
South Dakota	60	106	670	650
Tennessee	48	90	425	475
Texas	147	145	800	1,600
Utah	82	153	500	600
Virginia	55	95	325	925
Washington	89	50	800	900
West Virginia	55	65	900	590
Wisconsin	67	67	600	655
Wyoming	72	27	375	350
Yellowstone National Park	10			
Total	3,684	4,269	27,986	30,209

The Snow and Ice Bulletin shows the depth of snow on the ground and the thickness of ice at 8 p. m., seventy-fifth meridian time, on Mondays during the winter, as indicated by the reports from regular Weather Bureau stations and selected cooperative stations. The edition at the close of the season in March, 1907, was 1,400.

DISTRIBUTION OF FORECASTS AND SPECIAL WARNINGS.

While this work has been conducted on lines identical with those of previous years, the main efforts have been largely confined to extending the distribution through the medium of the local and long-distance telephone companies.

During the past autumn and winter the telephone companies operating lines in the South Atlantic and Gulf States were invited to cooperate with the Weather Bureau and give the daily forecasts to their

subscribers, particularly in rural and agricultural districts. As a result of this correspondence, 135 telephone companies made the forecasts available for the benefit of over 72,500 subscribers in the trucking sections of the districts referred to during the season when they were most valuable. Similar action was also taken during the spring of 1907 covering the States of the central valleys.

At the close of the fiscal year there are of record the names of 1,633 telephone companies cooperating with the Weather Bureau in the distribution of forecasts, representing in round numbers nearly 2,000,000 subscribers, who may obtain the forecasts daily by calling "Central," an increase of 971,620 over the number given in the last annual report.

Quite a number of the smaller companies have a distinctive signal by which they call up all rural subscribers on each circuit and give them the weather forecast each day as soon as it is received from the district center.

As opportunity presents it is proposed to bring this form of forecast distribution to the attention of the officials of every telephone company in the country and invite their cooperation, as experience has demonstrated the fact that this mode of dissemination is by far the most economical yet adopted for placing the forecasts before the public at the earliest possible moment after they are ready for issue.

An increase of 130 is shown in the number of stations receiving daily forecasts by telegraph at Government expense, as a result of the additional number of centers required in the great increase in telephonic distribution, although the rural telephone has permitted the discontinuance of a large number of centers of the rural free delivery service, which formerly received telegraphic forecasts at the expense of this Bureau.

The number of post-offices, or addresses, receiving daily forecasts by mail is now 78,109, which is 1,390 more than the number supplied by this means at the close of the previous year, while the number of patrons receiving forecasts through the rural free delivery has been reduced 11,166, owing to the substitution of the rural telephone for this service.

The distribution by railway telegraph lines remains practically the same, and there are 1,091 less places receiving forecasts through the cooperation of railway train baggagemen.

There is now of record a grand total of 2,141,151 addresses to which the daily forecasts are sent, or points where they are available for public benefit.

The following table shows in detail the distribution of forecasts and special warnings in the various States and Territories:

Distribution of daily forecasts and special and emergency warnings.

State or Territory.	At Government expense.			Without expense to United States by—				
	Forecasts and special warnings.	Special warnings only.	Emergency warnings.	Mail.	Rural free delivery.	Telephone.	Railroad train service.	Railroad telegraph.
Alabama	32	3	139	1,191	1,065	1,257	4	111
Arizona	8	0	0	142	0	582	0	0
Arkansas	27	5	102	589	302	1,608	0	5
California	31	11	0	1,245	4,561	19,496	0	2
Colorado	17	62	39	1,012	938	6,890	0	1
Connecticut	14	0	49	1,379	50	53,250	142	0
Delaware	12	0	0	98	1,188	1,865	0	25
District of Columbia	0	0	0	1,365	0	10,000	0	0
Florida	32	134	32	1,005	43	5,057	0	57
Georgia	40	34	241	1,762	1,135	5,047	72	262
Idaho	9	0	0	320	55	7,522	0	0
Illinois	152	1	468	3,375	4,324	467,554	426	30
Indiana	95	1	208	2,160	2,193	84,446	132	64
Indian Territory	7	0	4	252	100	4	0	69
Iowa	160	5	400	2,061	6,687	94,908	25	0
Kansas	110	2	186	1,269	5,680	12,845	0	22
Kentucky	39	36	96	1,691	699	66,561	0	16
Louisiana	37	36	61	666	207	4,075	0	12
Maine	16	1	40	1,038	877	811	0	0
Maryland	28	4	42	2,100	1,196	5,301	0	88
Massachusetts	21	11	63	3,092	310	14,933	80	0
Michigan	90	5	379	6,669	900	107,558	160	242
Minnesota	104	6	196	3,226	6,510	97,969	0	13
Mississippi	40	7	118	867	713	4,587	0	6
Missouri	76	2	240	3,976	2,660	105,942	0	25
Montana	12	25	18	446	50	9,087	0	0
Nebraska	110	5	221	1,129	958	29,199	0	0
Nevada	4	0	0	70	0	0	0	0
New Hampshire	20	0	34	849	1,564	1,481	16	0
New Jersey	31	18	45	1,187	0	11,160	0	108
New Mexico	7	1	0	73	0	301	0	20
New York	121	46	365	7,853	3,278	116,625	205	199
North Carolina	73	14	189	969	3,695	9,639	0	5
North Dakota	15	2	99	189	1,395	99	0	0
Ohio	94	97	312	6,421	1,434	358,476	23	13
Oklahoma Territory	30	1	13	401	1,194	8,117	0	56
Oregon	14	0	0	581	535	6,208	0	0
Pennsylvania	80	9	367	4,138	534	67,993	1	552
Rhode Island	2	0	12	443	0	404	13	0
South Carolina	31	8	109	914	600	1,070	0	40
South Dakota	52	22	77	720	851	15,750	0	0
Tennessee	40	5	291	1,252	1,775	14,059	2	2
Texas	96	54	240	1,199	3,770	33,337	0	33
Utah	9	36	0	382	826	29,000	0	0
Vermont	13	0	46	567	366	467	12	8
Virginia	64	4	96	1,526	1,533	18,824	101	41
Washington	27	0	0	728	1,517	23,695	0	0
West Virginia	26	7	55	1,130	83	16,415	0	7
Wisconsin	106	11	298	2,275	2,999	20,929	9	0
Wyoming	6	3	8	117	40	3,502	0	0
Total	2,280	734	5,998	78,109	71,300	1,985,905	1,423	2,134

CLIMATOLOGY.

An important contribution to the needs of the people was made in the issue of Weather Bureau Bulletin Q, Climatology of the United States, by Prof. Alfred J. Henry. The bulletin makes a quarto volume of 1,012 pages; it contains a comprehensive summary of the most important climatic elements and rather complete climatic statistics for each State and Territory, excluding only Alaska and the insular possessions. The report is in great demand.

OCEAN METEOROLOGY.

The function of the Bureau in respect to ocean meteorology is (1) the issuance of daily storm warnings and weather forecasts for the benefit and protection of shipping; (2) the collection of meteorological and physical information pertaining to the various oceans, their atmospheric disturbances, winds, currents, temperatures, densities, ice conditions, etc.; (3) the reduction of this information to such shape and its publication in such form as will prove of highest value to commerce and navigation.

The information in question is obtained entirely through a system of voluntary cooperation with the Bureau on the part of the vessels of the naval and merchant marine of every maritime nationality on the globe, a specifically designated observer aboard each cooperating vessel being under instructions from master or owner to furnish the Bureau with certain daily observations, to wit, a statement of the meteorological conditions existing at the hour of Greenwich mean noon of each day that the vessel is at sea; the Bureau in return promising to furnish master and observer with a copy of such publications as may be founded upon the observations in question.

Blank forms for recording the observations and franked return envelopes for inclosing these forms are provided by the Bureau. By the courtesy of the Department of State, moreover, forms left at any American consulate are forwarded with the official consular mail. Thus, in no case is the observer put to the expense of postage. No instruments are provided, the intention being that the observer shall in each case employ those belonging to the vessel to which he is attached, the policy of the Bureau in this respect being to encourage owners, for the sake of their own interests, to provide a suitable instrumental outfit.

NUMBER OF COOPERATING MARINE OBSERVERS.

The total number of vessels that have furnished meteorological reports during the past year is 1,216, distributed as follows:

British	633	Belgian	9
American	193	Russian	6
German	148	Portuguese	7
French	53	Chinese	4
Dutch	41	Cuban	2
Danish	31	Chilean	2
Italian	30	Argentina	1
Japanese	7	Haitian	1
Spanish	15		
Austrian	12	Total	1,216
Norwegian	11		

The total number of meteorological reports returned by these cooperating observers during the year was 8,588, distributed over the various oceans as follows:

North Atlantic	7,061
South Atlantic	221
North Pacific	984
South Pacific	211
Indian	111
Total	8,588

LOCAL OFFICES ASSISTING IN THE OCEAN METEOROLOGICAL WORK.

The list of local offices equipped to assist in ocean meteorological work of the Bureau, with the number of completed reports received and blank reports distributed by each during the year, is as follows:

Station.	Form No. 1201—O. M.		Station.	Form No. 1201—O. M.	
	Blanks distributed.	Reports received.		Blanks distributed.	Reports received.
Portland, Me	75	44	Pensacola, Fla	469	26
Boston, Mass	294	239	Mobile, Ala	24	4
New York, N. Y	2,530	2,226	New Orleans, La	282	168
Philadelphia, Pa	651	411	Galveston, Tex	195	137
Baltimore, Md	363	296	Tacoma, Wash	162	36
Washington, D. C	6,808	4,380	Seattle, Wash	140	93
Norfolk, Va	105	86	Portland, Oreg	377	52
Wilmington, N. C	16	4	San Francisco, Cal	682	293
Charleston, S. C	16	6	San Diego, Cal	65	26
Savannah, Ga	53	24	Honolulu, Hawaii	50	19
Jacksonville, Fla	64	5			
Key West, Fla	18	1	Total	13,459	8,588
Tampa, Fla	21	12			

As an illustration to owners and observers of the instruments required by the service, each of these offices has been furnished a wet and dry bulb thermometer, with protecting louvre, suitable for use aboard ship. Four of them, viz, New York, Philadelphia, Baltimore, and Norfolk, have received marine barometers of the type recommended by the Bureau, provided with a special suspension and protecting case, the device of Prof. C. F. Marvin, by means of which the barometer is safely housed except when in actual use. Fourteen similar barometers remain in the hands of the manufacturers awaiting transportation (necessarily by hand) to the local offices for which they are destined. It is also the intention to furnish each of the local offices engaged in this work with the apparatus devised by Mr. James Page, for determining the local direction and force of the wind from the deck of a rapidly moving vessel, a matter which has hitherto been a cause of considerable inaccuracy in meteorological observations at sea.

As evidence of its appreciation of the voluntary and arduous services rendered by these cooperating marine observers, and as an inducement to further efforts on their part, the Bureau has during the past year awarded to such of them as have returned reports of distinctive excellence one or more gnomonic charts of the various oceans, a limited edition of which was obtained from the Bureau of Equipment, Navy Department. These charts, the object of which is to facilitate the practice of great circle sailing, have proved a most valuable adjunct to the work.

UTILIZATION OF THE OBSERVATIONS.

The meteorological observations thus received from the cooperating marine observers are utilized for two distinct purposes.

(1) The construction of daily synoptic weather charts, showing the meteorological conditions prevailing over the ocean, at Greenwich mean noon of each successive day.

Apart from their value to the student of meteorology, it is only by a study of these charts that the practical navigator can learn to properly appreciate the value of his own isolated observations as an aid to forecasting the changes of weather about to ensue, and of shaping such course as to profit by them. It is only from such charts that he can obtain a knowledge of the character and progress of ocean storms, of the regions of the ocean in which they are liable to occur, of the method of handling his vessel so as to avoid dangerous proximity to the center, and of even exchanging the foul and violent winds by which his vessel is beset in one semicircle of the rotating system for the less violent winds of the other.

The construction of these charts is at present confined to the limits of the north Atlantic and north Pacific oceans, the number of observations received for the waters of the Southern Hemisphere having proved thus far insufficient to justify a like attempt for the south Atlantic, the south Pacific, and the Indian oceans. The efforts of the Bureau are at present directed to the task of increasing the number of cooperating observers in these waters, and with strong hopes of success.

(2) Tabulation with a view to obtaining an accurate knowledge of the monthly climatology of the sea.

Aside from its scientific value, the purpose of this tabulation is to furnish navigators with a statement of the average conditions of wind, weather, currents, fog, ice, etc., prevailing over the ocean for each month in the year, enabling them to so shape their course that they may derive full advantage from favorable and suffer least disadvantage from unfavorable conditions.

This tabulation has been carried forward with vigor during the year, and in the case of the south Atlantic Ocean is now practically completed for the months of January, February, March, April, May, and June, the period covered extending from 1888 to 1906. Under date of April 15, 1907, the Chief of the Bureau of Equipment, Navy Department, requested the aid of the Weather Bureau in revising the information published upon the monthly Pilot Charts of the north Pacific Ocean, issued by the U. S. Hydrographic Office. In compliance with this request the tabulation of the observations for the north Pacific Ocean was undertaken, and the result will be furnished the Bureau of Equipment for publication upon the monthly Pilot Charts for the year 1908.

In addition to the above the Bureau has at monthly intervals during the year furnished the Bureau of Equipment, Navy Department, with the following information for publication upon the Pilot Charts:

(1) A statement of the region and average monthly frequency of fog over the north Atlantic Ocean during the nine-year period 1898–1906.

(2) A statement of the region and monthly average frequency of gales over the north Atlantic Ocean during the ten-year period 1897–1906.

(3) A chart showing the positions of the center, upon successive days, of all important cyclonic storms that have occurred during each month of the five-year period 1902–1906 within the limits of the north Atlantic Ocean.

WIRELESS TELEGRAPHIC WEATHER SERVICE.

The essential feature of this service is the collection by wireless telegraphy of meteorological observations from vessels at sea, and the dispatch by the same means to vessels at sea of weather forecasts and storm warnings based upon the observations thus collected.

The following vessels, all equipped with the Marconi apparatus, have been authorized to transmit to the Bureau the record of the daily Greenwich mean noon meteorological observations, and have been supplied with the telegraphic code, forms, etc., required for that purpose:

American Line: Steamships *New York*, *Philadelphia*, *St. Paul*, *St. Louis*.

North German Lloyd: Steamships *Grosser Kurfurst*, *Kaiser Wilhelm II*, *Kaiser Wilhelm der Grosse*, *Kronprinz Wilhelm*.

Hamburg-American Line: Steamships *Amerika*, *Bluecher*, *Deutschland*, *Kaiserin Augusta Victoria*.

Cunard Line: Steamships *Campania*, *Carmania*, *Caronia*, *Carpathia*, *Etruria*, *Ivernia*, *Pannonia*, *Saxonia*, *Slavonia*, *Ultonia*, *Umbria*.

White Star Line: Steamships *Arabic*, *Baltic*, *Cedric*, *Celtic*, *Cymric*, *Majestic*, *Oceanic*, *Teutonic*.

Compagnie Generale Transatlantique: Steamships *La Bretagne*, *La Lorraine*, *La Provence*, *La Savoie*, *La Touraine*.

Allan Line: Steamships *Corsican*, *Victorian*, *Virginian*.

Canadian Pacific Steamship Line: Steamships *Empress of Britain*, *Empress of Ireland*.

The privilege has also been extended to the following vessels equipped with the De Forrest system:

Panama Railroad and Steamship Company: Steamships *Advance*, *Alliance*, *Colon*, *Finance*, *Panama*.

Mallory Line: Steamships *Concho*, *Denver*, *San Jacinto*.

Also to the following equipped with the Massie system:

Pacific Steamship Company: Steamship *President*.

The *President* is, as far as known, the only vessel on the Pacific carrying wireless apparatus. Other vessels are said to be in course of equipment, and the wireless weather service on that coast, in view of its supreme importance in the matter of local forecasting, will be prosecuted with vigor.

The wireless telegraphic weather service and code have also been adopted by the United States Navy Department, and all vessels of the United States Navy are instructed to transmit the daily weather dispatch while at sea. The wireless telegraphic stations controlled by the Navy Department are also required to receive weather messages from merchant vessels and to transmit them to the Bureau, likewise to dispatch the weather forecasts and storm warnings issued by the Bureau to vessels at sea demanding them, free of cost.

The total number of wireless weather reports received during the year from vessels at sea was 738. Of this number 679 were from transatlantic liners, distributed along the route between Sandy Hook and longitude 44° west.

INSTRUMENTS.

STATION EQUIPMENTS.

For a number of years past it has been the policy of the Bureau to equip all the regular telegraphic stations with complete sets of automatic instruments for recording the temperature and pressure of the air, rainfall, sunshine, and the velocity and direction of the wind. This work has been carried forward gradually as funds were available, and all the important stations are now fully supplied. The same uniform type and character of equipment is also issued to all new stations. The installation of automatic river-stage indicators, referred to in my last annual report, has been extended to the stations at St. Louis, Mo., and Pittsburg, Pa.

During the last year the Bureau made an extensive display of instrumental apparatus, charts, photographs, etc., exhibiting its work at the Western Pennsylvania Exposition, held at Pittsburg. This entire exhibit, with additional features, was reinstalled at Jamestown. All this work has been under the immediate supervision of Prof. C. F. Marvin, chief of the instrument division.

Extensive improvements are now nearly completed in the instrumental equipment of the Washington station, and arrangements have been effected for the consolidation in one observatory room of the instruments employed in making regular observations and those heretofore maintained especially for exhibit and instructional purposes.

NEW APPARATUS AND IMPROVEMENTS.

Careful attention has always been given by the Instrument Division to the development of new forms of apparatus, the improvement of old instruments, and their better adaptation to the special requirements of the work of the Bureau. During the past year much important work of this character has been accomplished, of which the following items deserve special mention:

(1) The construction of an improved recording wind vane, such as is employed at all regular stations. In this ball bearings are substituted for the antifriction wheel bearings previously employed, and a simplified construction of the electrical contact-making mechanism is provided. The idea has been to reduce the size of the apparatus and make it wholly self-contained, so that worn and damaged parts may be more readily replaced and the entire vane and recording attachments can be easily set up or removed as a unit. Heretofore the vane has been a relatively large affair and the recording mechanisms separately connected, so that repairs and renewal of parts are not so easily effected.

(2) The completion and testing of a mechanically recording mercurial barograph of great precision. In this instrument the record is magnified five times and very slight oscillations of pressure are accurately recorded and measurable on the diagram. The instrument is fully compensated for temperature.

(3) Considerable attention has been given to the subject of measuring and recording evaporation from free-water surface, and an experimental tank has been provided with an electrical float device which operates to maintain the water in the tank constantly at

exactly the same level. If the water evaporates and lowers the level, a sufficient quantity of water to restore the level is admitted through a tipping bucket, by which the quantity of water admitted may be measured and recorded. So, likewise, during rainfall the excess of water is drawn from the tank and measured and recorded by means of another tipping bucket. When these experiments were well advanced, the Bureau took up the great project of evaporation studies at the Salton Sea, as described elsewhere in this report. The results of Professor Marvin's work, including certain micrometers, hair hygrometers, psychrometers, anemometers, and apparatus devised for that work, have been turned over to Prof. Frank H. Bigelow, in charge of the Salton Sea evaporation project.

(4) About 20 sets of the instruments needed for making meteorological observations aboard ships at sea were prepared for installation at Weather Bureau offices in maritime exchanges and elsewhere. The Bureau does not supply any instruments for its ocean meteorological work, and the object in view in exhibiting these sets of instruments at maritime centers is to show interested persons the most suitable instruments for the purpose and how they may be best installed and used. The instruments comprise a high-grade mercurial barometer of the marine type, swung in gimbals, and a set of wet and dry bulb mercurial thermometers, mounted within a small louvered shelter of appropriate construction. The barometer is mounted within a mahogany case by means of a special support of such construction that the barometer can be swung free, and the pressure observed independent of the motion of the ship. The instrument thereafter can be readily replaced and secured within the case, where it is completely preserved from accidental injury. A single model of a device invented by Mr. James Page, formerly in charge of the Division of Ocean Meteorology, for deducing the true force and direction of the wind aboard moving vessels at sea, was also made in the shops of the Instrument Division. The rapid motion of fast-going ocean vessels sets up such a strong apparent wind that the true force and direction of the wind are difficult to observe, and are often incorrectly reported. The device in question enables the desired result to be deduced from the apparent wind and the known motion of the vessel.

(5) Important improvements have been made in the weighing mechanisms of the recording rain and snow gauge, of which a limited number have been in use at important stations of the Bureau. The automatic balance has been simplified and entirely reconstructed, and its capacity increased. The weighing parts of the mechanism can now be completely dismantled, for cleaning, and be replaced in a few minutes.

(6) Elaborate detail working drawings have recently been completed, under the direction of Professor Marvin, for an automatic kite reel of great power and capacity. In scientific kite flying to great elevations, an elaborate automatic reeling mechanism, for managing the steel piano wire with which the kites are held, is indispensable. In the design now referred to a capacity of over 50,000 feet of wire, 0.04 inch in diameter, is provided in the storage drum, with an estimated resistance to crushing of nearly one million pounds. This great strength is necessary to withstand the cumulative crushing strain due to winding many thousands of feet of wire under tension. The reel is driven by a variable-speed electric motor and the

wire is automatically guided and distributed systematically over the face of the drum. The length of the wire unwound and the amount on the drum are shown by means of suitable indicators, and a specially devised dynamometer indicates the tension upon the line at all times, whether the wheel is in motion or at rest.

(7) The exact measurement of the moisture contents of the atmosphere is one of the most difficult meteorological observations that have to be made, especially at low temperatures and in contracted quarters, and where great exactness is necessary, as in many special studies. Experiments are now in progress with a new apparatus for this purpose, which promises to yield very accurate and useful results. The apparatus shows directly the pressure of the aqueous vapor, the readings being given in thousandths of an inch.

LIBRARY.

Through exchange for Weather Bureau publications or by gift there have been received 105 periodicals, 705 books and pamphlets, daily weather maps from 17 foreign meteorological services, and weekly and monthly summaries from 59 foreign meteorological services or observatories. Numerous duplicates and publications not relating to meteorology and not retained in our library are not included in the above enumeration; such publications have either been returned to their authors or donated to other libraries.

The total number of permanent accessions during the year, including bound files of periodicals, was 1,028. The total number of accessioned titles in the library has now reached 27,173.

The marked increase in the number of publications received through exchange is largely due to the systematic effort that has been made to collect the most detailed climatological data from all parts of the world, especially from those regions whose climate is but little known. The extension of the work of the library along these lines has been in response to an increasing demand for such data. Especially urgent have been the requests from the Bureau of Plant Industry, in connection with its work of plant introduction. Thousands of plants are now received annually by that Bureau from its trained explorers in foreign countries, and it is of the highest importance to know, for each plant, the climate of its natural habitat, in order to determine the section of our own country in which it is most likely to succeed. The work of collecting and collating such data has been carried on by the assistant librarian, Mr. C. F. Talman, who has contributed numerous papers along this line to the Monthly Weather Review, including much information obtained by personal correspondence and not, therefore, available in printed form.

Frequent requests have also been made by investigators during the past year for temperature and rainfall records extending over a long period of years. These requests have, in general, been satisfactorily met. Bibliographers have also consulted this library for works on meteorology not to be found elsewhere in this country.

The general bibliographic work, including the publication in the Monthly Weather Review of lists of "Recent additions to the Weather Bureau Library," and "Recent papers bearing on meteor-

ology," has been continued as heretofore, with the addition of weekly lists in manuscript for use of the officials at the central office.

During the winter the assistant librarian made an unofficial visit to some of the principal meteorological libraries of Europe and gathered material toward a select bibliography of recent meteorological literature that he has undertaken. This work will aim to present a carefully selected and annotated list of the most useful publications relating to each branch of meteorology, and will greatly facilitate the work of replying to the numerous requests for bibliographic information which are received from the observers of the Weather Bureau, from authors, and from teachers and students planning courses in meteorology.

The librarian, Mr. Herbert H. Kimball, has brought the library of the Weather Bureau up to a higher standard of use and effectiveness than it has heretofore attained. He has also performed the duties of supervising examiner in all matters pertaining to examinations for promotion, and has maintained a series of observations in solar radiation during the year, he being especially trained and well fitted for this latter important duty.

METEOROLOGICAL RECORDS.

The routine work of checking the receipt of the various meteorological reports, the examinations of the daily, monthly, and annual summaries rendered by the numerous regular and cooperative observers of the Bureau, the preparation of the usual tables, charts, and other matter for the Monthly Weather Review and the Annual Report (quarto volume), furnishing information upon weather subjects to private individuals, public institutions, for use in courts, etc., and tabulating in the permanent records of the Bureau the more important meteorological data from the various points of observation have all been promptly done in the Division of Meteorological Records.

Correspondence with individuals and companies desiring information as to the climate of various portions of the country has largely increased over previous years, about one thousand five hundred such requests having been received during the past twelve months.

Many of these requests were answered by forwarding to the applicants copies of the publications of the Bureau, but numerous others required the copying and collating of data from the original reports.

On account of the numerous requests for information, especially as to rainfall, from certain localities now being rapidly settled, it has been found convenient to have printed short extracts for representative districts, giving for each detailed information regarding its salient climatic features. Similar extracts for other important localities will be prepared as the demands require.

NEW SYSTEM OF NORMALS.

During the past ten years the meteorological data of pressure, temperature, and vapor tension have been revised by Professor Bigelow, with a view of reducing them to homogeneous systems. The result of this work on barometry was published in 1902, and the data contained therein form the basis for the reduction to sea level of the

barometer readings which appear on the daily weather maps. The recomputation of the temperature data and the determination of normals referred to a thirty-three-year record are now complete and ready for publication.

The vapor tension normals will be finished during the current year. Daily normals of the temperature, and also of the rainfall, have been furnished to all stations for use in climatological studies.

MONTHLY WEATHER REVIEW.

The Monthly Weather Review is regularly published, and the Chief of Bureau has to acknowledge the kindness of those meteorologists who have contributed excellent articles, such as the following:

The Mount Rose weather observatory, by Prof. J. E. Church, jr., of the University of Nevada.
The meteorological optics of Prof. J. M. Pernter, by Prof. R. W. Wood, of Johns Hopkins University.
Variations in temperature over a limited area, by Prof. W. I. Milham, of Williams College.
The zodiacal light, by Prof. Arthur Searle, of Harvard University.
The direction of local winds as affected by contiguous areas of land and water, by T. H. Davis.
A rare cumulus cloud of lenticular form, by H. H. Clayton.
The formation of anchor ice, by Prof. H. T. Barnes, of McGill University.
The difference of temperature between Mount Royal and McGill College Observatory, by Profs. C. H. McLeod and H. T. Barnes.
The Adirondack rainfall summit, by R. E. Horton.
The growth of fog in unsaturated air, by F. W. Proctor.
Rainfall and outflow above Bohio, in the valley of the Chagres, by Gen. H. L. Abbot.
Rainfall and run-off of the Catskill Mountain region, by Thaddeus Merriman.
The temperature in anticyclones, by H. H. Clayton.
The meteor of March 14, 1906, over central New York, by Prof. H. A. Peck, of Syracuse University.
A proposed new method of weather forecasting, by H. H. Clayton.
The depression in the solar radiation, by Ladislas Gorczynski.

Among the new features in the Monthly Weather Review has been the addition of the regular chapter on "Ocean Meteorology," by the chief of that division, formerly Mr. James Page, now Mr. H. L. Heiskell.

Among the special contributions by Weather Bureau officials may be mentioned:

Climatology of Porto Rico from 1867 to 1905, by W. H. Alexander.
The relation of the weather to the flow of streams, by F. H. Brandenburg.
Phenomenal rainfall at Guinea, Va., by E. A. Evans.
Suggestions as to teaching the science of the weather, by J. Warren Smith.
The study of practice forecasting, by J. L. Bartlett.
Salton Sea and the rainfall of the Southwest, by Prof. A. J. Henry.
Villard's theory of the aurora, by W. R. Blair.

In order that men at stations may be kept informed of the progress of meteorology outside the Weather Bureau, the librarian contributes to the Review monthly lists of additions to the Weather Bureau library and of papers bearing on meteorology, while the assistant librarian contributes reviews of the progress of climatology.

Owing to the great stimulus recently given to the study of earthquakes, the Monthly Weather Review has published a number of articles by Prof. C. F. Marvin on that subject.

Prof. F. H. Bigelow has continued the publication of his studies on the waterspout in Vineyard Sound.

The West Indian hurricane of September, 1906, that was so destructive at Pensacola and Mobile, has been treated by Prof. E. B. Garriott.

Mr. W. J. Bennett has published an article on the harmonic analysis of the diurnal variation of pressure at Washington, D. C.

Mr. C. F. von Herrmann has presented a series of problems in meteorology, with their solutions, which has been highly appreciated by those engaged in educational work; and also an article on the velocities of centers of high and low pressure in the United States.

Prof. H. J. Cox has contributed an account of his visits to meteorological services in Europe.

As the Monthly Weather Review goes to all regular and cooperative observers of the Bureau, and also to those who in exchange send their own publications to the library, its circulation is slowly increasing. Its usefulness is evidenced by the desire expressed on all sides to obtain complete sets of this publication. A small collection of back numbers is held for use in exchanges, for the purpose of securing rare meteorological works for the Weather Bureau library.

Work on a general index of the Monthly Weather Review, including also meteorological items in the annual reports and other publications, has progressed as fast as practicable in the hands of Mr. Stetson and Mr. Mills, and the work is now so nearly completed that the manuscript will be transmitted for publication in a few weeks.

An elaborate report on the formation of frostwork and ice, by Mr. W. A. Bentley, is now being revised by the author, preparatory to its publication at an early date.

Inasmuch as the Monthly Weather Review goes to all the technical meteorologists of the world, and as there is no equivalent medium of communication among English-speaking meteorologists, and as it is necessary to stimulate the study and solution of many most difficult problems in the physics of the atmosphere, it has been thought proper to occasionally allow the publication of highly technical papers that are offered. Meteorology may be looked at from a statistical, climatological point of view; or, again, with an eye to its relation to agriculture and other human industries; but it is fundamentally a study of the laws that govern atmospheric phenomena, and it is necessary for the Weather Bureau to encourage and assist researches that are directed toward the establishment of these laws, as distinguished from those superficial ideas which are so prevalent, and which exaggerate the influence of the moon and stars, the Gulf Stream, the cultivation of the soil, and many other matters that are of minor importance in meteorology.

THE TEACHING OF METEOROLOGY.

A steady increase of interest in meteorological education is manifest throughout the country, as, in fact, throughout other civilized nations. In general, instruction in meteorology is considered as a part of the courses in geology, geography, or physical geography; but in two universities, George Washington and Cornell, courses have been offered in the higher mathematics and physics that constitute the fundamental basis of meteorology.

During 1906 there were fourteen universities, colleges, and scientific schools in which regular courses of instructions were given by Weather Bureau officials, and in five or six more the matter was in abeyance. Also there were at least 40 officials besides those conducting the above-mentioned courses who gave occasional lectures or addresses.

TELEGRAPH DIVISION.

The number of miles of telegraph and telephone lines operated by the Weather Bureau remains the same as at the close of last year, viz, 537, inclusive of about 96 miles of submarine cables.

As during former years, these lines rendered valuable services in obtaining aid for shipping in distress, in reporting inbound and outbound vessels to owners, maritime associations, etc., and by affording in most cases to residents of isolated places and others the only means of telegraphic communication. This latter feature was forcibly brought to notice by the loss of the steamer *Larchmont* near Block Island on the night of February 11, 1907, which involved the loss of about 150 lives. The Weather Bureau cable from Block Island to the mainland furnished the only available telegraph facilities to the survivors for communicating with relatives and friends, and to the press for giving prompt information to the public. Nearly 34,000 words of press matter were cabled from the island in connection with this disaster.

The Hatteras and Nantucket sections also serve as important connecting links between wireless and commercial telegraph systems.

A new submarine cable, 1½ miles long, was laid across Oregon Inlet, North Carolina, on July 24, 1906, under the supervision of the chief of the Telegraph Division. The old cable across the inlet had a bad leak in its insulation, and was so heavily sanded that it could not be repaired.

On August 26, 1906, the submarine telephone cable between Charlevoix and Beaver Island, Mich., was broken and badly damaged by the steamship *Illinois*. The chief of the Telegraph Division repaired the cable on September 6, 1906.

No extensive repairs to land lines were necessary during the year, nor are any contemplated for the coming year, except on the Tatoosh Island line, where it is hoped that the work now underway will materially increase the efficiency of this important, but exceedingly difficult, section to maintain.

The Government receipts from all lines for commercial messages handled during the year amounted to $3,393.18.

PRINTING.

The printing of the Monthly Weather Review, Daily Weather Maps, National Weather Bulletins, Snow and Ice Charts, and the regular forms has continued as heretofore.

The work of printing and wrapping blank station maps, forecast cards, and rural free delivery slips, the greater portion of which has previously been done at the Government Printing Office, was, during the year just closed, performed exclusively in the Weather Bureau printing office.

In compliance with Executive Orders, all mailing lists have been thoroughly "purged" and revised, and such publications as have a price affixed, except blank weather maps, have been turned over to the superintendent of documents.

EXAMINATIONS FOR PROMOTION.

Under this heading, in my last annual report, reference was made to the faulty grammatical construction very generally found in essays submitted in connection with the examination in English grammar. So many of the younger employees failed to present satisfactory essays that it was decided to advance this test from the first to the second grade of examinations. Commencing with the examinations of May, 1907, essay writing, therefore, appears as a separate subject. Employees who have not had the advantages of thorough training in English composition will not be barred from promotion to the $1,000 grade, but they will be expected to satisfactorily meet the required grammatical tests before receiving further advancement.

The following table gives the number of examination papers marked during the year:

Number of employees examined.

Subject.	1906.		1907.		Total.	Passed.	Failed.
	September.	November.	February.	May.			
English grammar	9	9	20	7	45	35	10
Arithmetic	4	9	9	3	25	20	5
Elementary meteorology	7	6	9	4	26	20	6
Algebra	3	4	7	2	16	14	2
Physics	2	2	6	6	16	11	5
Trigonometry	5	1	3	2	11	9	2
Essay writing				3	3	3	0
Astronomy			3	3	6	6	0
Plant physiology		1	2	2	5	5	0
Advanced meteorology	1		3	1	5	5	0
Total	31	32	62	33	158	128	30

NEW STATIONS.

The bill making apropriation for the support of the Weather Bureau for the fiscal year beginning July 1, 1907, makes no provision for the establishment of additional weather stations, this provision, which was included in the bills for previous years, having been eliminated by Congress. There is, however, a large demand for these stations, and many communications are on file in the Weather Bureau petitioning for their establishment. In many cases the results to be secured would not justify the expense on the part of the Government; in others large agricultural, commercial, and marine interests would largely profit. Stations might advantageously be located at the following-named places: Corinth, Miss.; Fort Wayne, Ind.; Lansing, Mich; Mount Washington, N. H.; Pikes Peak, Colo.; Sandy Hook, N. J.; Wallace, Idaho; Houston, Tex., and Sitka, Alaska.

OBSERVATORY BUILDINGS.

Forty-eight Weather Bureau observatory buildings are owned by the Government, including the group of 9 buildings at Mount Weather, Va. Most of these buildings have been erected or remodeled during the past ten years, and are well adapted for meteorological purposes. The exceptions are small buildings on Mount Washington, N. H., and at Kittyhawk, N. C. The former has not been occupied in recent years and is now in a dilapidated condition, but it is likely that observations on Mount Washington may be resumed, in which event this building may be used by the contractor while a suitable building is being erected. The building at Kittyhawk was formerly used as a telegraph and repair station on the Government telegraph line extending between Cape Henry and Cape Hatteras. It is little more than a shack and is of practically no value, but it serves as a shelter for parties engaged in repairing the telegraph line.

NEW BUILDINGS RECOMMENDED.

I am of the opinion that the construction of observatory buildings should be continued until one is located at each of the principal stations of the service, where accurate and reliable observations are so necessary in the preparation of forecasts and warnings, and in supplying accurate meteorological data to large commercial communities. Their advantage over office buildings and public buildings, whose architecture in most cases unfits them for a satisfactory exposure of meteorological instruments, can not be gainsaid, and their maintenance per annum will not materially exceed the rental cost of offices in private buildings, and in many cases will be less. It is not desirable that all of the observatory buildings that are required be erected at one time. The work can be done to better advantage if a few are erected each year. I am of the opinion that observatories should be erected in the near future at the following places: Abilene, Tex.; Cheyenne, Wyo.; Cleveland, Ohio; Columbia, Mo.; Fort Wayne, Ind.; Lansing, Mich.; Mount Washington, N. H.; Neah Bay, Wash.; Pikes Peak, Colo.; Sandy Hook, N. J.; Sitka, Alaska; Houston, Tex., and in the vicinity of St. Paul and Minneapolis, Minn.

RENTED BUILDINGS.

At certain stations where observatory buildings are not owned by the Government, and where it seemed advisable in the interests of efficient service, a small building or a suite of rooms have been rented in order to secure office space and living quarters for the observers. This is economical to the Government and results in better service, because the rent paid in most instances is less than the cost of office rooms in business blocks, the salary paid to an official provided with living quarters is less than would be given him if such quarters were not furnished, and good exposures for instruments are obtained.

Rented buildings occupied wholly by the Weather Bureau.

Station.	Annual rent.	Other items included.
Alpena, Mich	$650	Heat, light, water.
Basseterre, St. Kitts	120	1 room; observatory platform on cupola; janitor.
Bridgetown, Barbados	120	1 room; cleaner, water.
Curaçao, W. I	260	3 rooms; cleaner, light, water, ice, bridge tolls.
Del Rio, Tex	444	Heat, light, water.
Durango, Colo	440	Do.
East Clallam, Wash	120	Water.
Flagstaff, Ariz	300	
Helena, Mont	504	Steam-heating plant, water.
Honolulu, Hawaii	1,020	6 rooms; heat, cleaner, light, janitor and porter service, electric current for fan, storage.
Independence, Cal	360	Water.
Kalispel, Mont	360	
Lewiston, Idaho	540	
Manteo, N. C	144	
Moorhead, Minn	600	Heat, light, water.
Mount Tamalpais, Cal	420	Heat, light, water, free transportation of Government employees and supplies.
Pysht, Wash	144	Water.
Roseburg, Oreg	550	Heat, light, water.
Roswell, N. Mex	720	Heat, cleaner, water.
San Juan, P. R	684	4 rooms; light, water.
Santo Domingo, W. I	240	5½ rooms.
Thomasville, Ga	420	
Tonopah, Nev	1,200	
Twin, Wash	108	Water.
Williston, N. Dak	510	Heat, cleaner, light, water.
Winnemucca, Nev	360	Heat, light, water.
Total	11,338	

BUILDINGS OWNED BY THE WEATHER BUREAU.

The following table shows where the Weather Bureau buildings are located, and gives the cost of the buildings and grounds:

Location.	Cost of ground.	Cost of buildings.	Total cost.
Amarillo, Tex	$1,255.00	$6,503.00	$7,758.00
Anniston, Ala	1,799.75	13,060.69	14,860.44
Atlantic City, N. J	(a)	5,991.00	5,991.00
Bentonville, Ark	500.00	5,119.90	5,619.90
Birmingham, Ala	b 61.50	16,129.56	16,191.06
Bismarck, N. Dak	(a)	10,085.99	10,085.99
Block Island, R. I	1,034.50	7,668.25	8,702.75
Burlington, Vt	b 20.00	10,043.50	10,063.50
Cape Henry, Va	(a)	9,222.45	9,222.45
Charles City, Iowa	3,036.75	9,565.08	12,601.83
Columbia, S. C	3,799.00	9,165.00	12,964.00
Devils Lake, N. Dak	2,209.05	7,431.50	9,640.55
Duluth, Minn	2,041.70	7,430.68	9,472.38
Hatteras, N. C	a c 217.00	4,889.75	5,106.75
Havre, Mont	1,795.00	5,087.08	6,882.08
Iola, Kans	2,241.25	9,777.64	12,018.89
Jupiter, Fla	(a)	6,346.90	6,346.90
Key West, Fla	2,020.00	7,994.75	10,014.75
Kittyhawk, N. C	(a)	1,616.00	1,616.00
La Crosse, Wis	3,523.50	12,323.33	15,846.83
Modena, Utah	(a)	4,346.00	4,346.00
Mount Weather, Va:			
Administration building (including tower and tank)	1,863.15	20,971.12	22,834.27
Power house and balloon building	650.00	8,167.00	8,817.00
Absolute building	(a)	7,000.00	7,000.00
Variation building	(a)	8,904.55	8,904.55
Stable	(a)	1,900.00	1,900.00
Barn	(a)	900.00	900.00
Cottage for workmen	(a)	1,300.00	1,300.00
Physical laboratory	(a)	27,083.89	27,083.89
Cottage and office	(a)	6,800.00	6,800.00
Mount Washington, N. H	(c)	300.00	300.00
Nantucket, Mass	(d)	4,728.53	4,728.53
Narragansett Pier, R. I	4,151.75	8,036.50	12,188.25

a Government reservation.
b Donated—figures represent cost of title transfer.
c Leased.
d Building and ground purchased as a whole.
e Additional ground purchased.

	3
	1
	1
	2
	1
	1
	18
next higher grade or by certifi- positions with one exception d from $1,000 to $1,400 to fill a	155

d station	1
	1
	2
al reports	1
ical work	1
promotion	1
cause	2
connection with promotion exami-	2
urn to duty from leave of absence	6
owances of quarters, fuel, and light	3
	20

	82
	1
	1
services	2
	1
	87

services	3
	2
d neglect of official correspondence	1
on with the awarding of a contract, rom a State government for an ac- d States, and insubordination	1
	1
	1
extended furloughs	2
	11

probationary period:

services	1
work required	1
	2
	2

Location of Weather Bureau buildings and cost of buildings and grounds—Con.

Location.	Cost of ground.	Cost of buildings.	Total cost.
North Head, Wash	(a)	$3,820.13	$3,820.13
North Platte, Nebr	(b)	3,818.50	3,818.50
Oklahoma, Okla	c $38.90	10,520.25	10,559.15
Peoria, Ill	c 54.00	7,875.50	7,929.50
Point Reyes Light, Cal	(a)	2,875.00	2,875.00
Port Crescent, Wash	102.00	730.94	832.94
Sand Key, Fla	(a)	5,593.00	5,593.00
Sault Sainte Marie, Mich	(a)	2,994.12	2,994.12
Sheridan, Wyo	2,021.75	12,087.40	14,109.15
Southeast Farallon, Cal	(a)	5,211.22	5,211.22
Springfield, Ill	(a)	10,236.50	10,236.50
Tatoosh Island, Wash	(a)	5,000.00	5,000.00
Washington, D. C	(b)	174,950.79	174,950.79
Yellowstone Park, Wyo	(a)	11,156.00	11,156.00
Yuma, Ariz	(a)	1,500.00	1,500.00
Total	34,435.55	524,258.99	558,694.54

a Government reservation.
b Building and ground purchased as a whole.
c Donated—figures represent cost of title transfer.

It will be noted that at several places the buildings were erected on Government reservations; at others on ground donated to the Government.

MOUNT WEATHER BUILDINGS.

The construction of buildings at Mount Weather, Va., was exhaustively investigated during the year by the House Committee on Expenditures in the Department of Agriculture, by whom the scope of the work being carried on at that place was considered. A summary of the committee's report is contained in Report No. 8147, Fifty-ninth Congress, second session; it concludes as follows:

> The discretion as to where the stations are to be located is left with the Secretary of Agriculture. All the law and precedents seem to us, therefore, to fully justify the Secretary of Agriculture in everything that he has done in regard to the establishment of Weather Bureau stations and in regard to the erection of buildings for the accommodation of such stations as needed buildings—whether one or more.
>
> * * * * * * * *
>
> We are of the opinion that with so much money being annually spent in the making of forecasts and storm warnings, which everyone agrees have a great value to the various industries of the country, it is a wise economy to devote a reasonable amount of money to the carrying on of experimentation at one of the many stations of the Weather Bureau, so that the science that is back of the art of forecasting may be improved, and that thereby the annual expenditures for the support of the Weather Bureau may have a greater value to the people. We find no evidence of extravagance or misapplication of funds in the creation of the institution at Mount Weather, which we believe to have been worthily conceived and the plans so far to have been efficiently executed.

The physical laboratory building and the cottage and office building at Mount Weather, Va., included in the list, are not completed, and further work on them is dependent upon appropriation by Congress for this purpose. The walls of the physical laboratory building are completed, the roof and metal cornice work nearly finished, the window sashes are on the ground but not in place, and a small part of the pipes for the heating apparatus is installed. The porch, exterior painting, platform, grading, and all of the interior work, including plumbing, stairway, wiring, decorating, etc., remain undone. It will require about $12,000, exclusive of furnishings, machinery, and apparatus to complete this building. The cottage and

office building is under roof, and all exterior work except the porches and the painting is done. The interior work is partly done. The trimming, painting, plastering, decorating, and the installation of the plumbing fixtures are unfinished. The heating pipes are in place and the boiler and radiators on hand ready for installation. The material for the stairway, trimming, plastering, etc., is at hand. It will require about $3,000 to complete the building and grading. I have therefore recommended that the sum of $15,000 to complete the two unfinished buildings at Mount Weather, Va., be included in the estimate of appropriations for the next fiscal year.

OBSERVATORIES UNDER CONSTRUCTION.

The list also includes observatories at Anniston, Ala., Birmingham, Ala., Charles City, Iowa, Iola, Kans., La Crosse, Wis., and Sheridan, Wyo., which are in course of construction and will be completed by September 15, 1907.

NEED FOR OBSERVATORY BUILDINGS.

Experience during the past thirty years has demonstrated the value of observatory buildings in the work of the Weather Bureau. They provide for the taking of meteorological observations under favorable and unchanging conditions. Records thus obtained are of prime value for utilitarian purposes and indispensable to research. In cities where the Government does not own observatory buildings the offices are located in Government buildings or in rented quarters. It is difficult to obtain suitable exposure for meteorological instruments in such buildings because they were not designed for meteorological purposes, and frequent removals are necessary owing to the erection near-by of taller buildings and for other causes which interfere with even a fair exposure for instruments. Each change breaks the continuity of the records in so far as uniformity of conditions is concerned, and makes comparison difficult, if not impossible. The observatory buildings owned by the Government are designed for the peculiar needs of the work of the Bureau, and they are located on plats of ground of sufficient size to insure satisfactory exposure for years to come. Their value, however, is not confined to securing reliable observations. They contain office rooms well located and adapted for the dissemination of forecasts and information to the public, and living quarters which enable an official to be constantly at hand to care for the automatic recording instruments and respond to the public demands for information. It has been the policy to adjust the salaries of officials occupying these buildings so that the living quarters are part compensation. This plan, while it operates satisfactorily in most cases, has some objectionable features, and it is intended, if Congress renews the appropriations for observatory buildings, to recommend that in the future housekeeping quarters be not included therein, except in buildings located at places where it is impracticable to secure proper accommodations for observers off the Government premises; but that instead one to three rooms be furnished to observers who will be in custody of the premises, look after the automatic instruments, and respond to public calls for information outside of the ordinary office hours. This plan

will permit of certain advantageous changes in the architecture of the buildings and probably result in lessening the cost of construction. It may be advisable to eliminate the kitchen and dining-room features of the buildings now in use as fast as conditions will warrant, and to devote the rooms now used for those purposes to office use.

CHANGES IN THE FORCE OF THE BUREAU.

CLASSIFIED SERVICE.

Appointments:	
Probationary—	
Assistant physicist at $1,400	1
Pressman at $1,250	2
Clerks at $1,000	3
Printer at $1,000	1
Clerk at $900	1
Copyist at $840	1
Assistant observer at $840	1
Assistant observers at $720	43
Repairmen at $720	5
Fireman at $720	1
Skilled laborer at $600	1
Messenger boys at $450	7
Skilled laborer at $450	1
Messenger boys at $360	34
	102
Transfer—	
Research observer at $1,400	1
Research observer at $1,200	1
Assistant observer at $1,000	1
Printer at $1,000	1
	4
Reinstatement—	
Printer at $1,000	1
Messenger at $600	1
	2
Under section 3, Rule 2, civil-service act and rules, expert in vessel reporting at $840	1
Temporary—	
Compositors at $1,250	3
Clerks at $1,200	2
Skilled mechanic at $1,000	1
Clerk at $1,000	1
Printers at $1,000	2
Clerk at $900	1
Repairmen at $720	2
Folder and feeder at $720	1
Skilled laborer at $450	1
Messenger boys at $360	31
	45
Emergency—	
Pressmen at $1,250	2
Compositors at $1,250	3
Clerk at $1,200	1
Clerk at $1,000	1
Copyists at $840	2

Appointments—Continued.	
Emergency—	
Firemen at $720	3
Folder and feeder at $720	1
Messenger at $600	1
Skilled laborers at $600	2
Skilled laborer at $450	1
Messenger at $450	1
	18
Promotions (all promotions were to the next higher grade or by certification for advancement from subclerical positions with one exception wherein a skilled mechanic was promoted from $1,000 to $1,400 to fill a temporary vacancy)	155
Reductions:	
Causes—	
To grant assignment to preferred station	1
To eliminate the $1,500 grade	1
Neglect of duty	2
Inability to write climatological reports	1
Numerous errors in meteorological work	1
Ineligibility, unknown prior to promotion	1
Necessitated by next preceding cause	2
Negligence and irregularity in connection with promotion examination	2
Necessitated by employee's return to duty from leave of absence without pay	6
As an offset to Bureau for allowances of quarters, fuel, and light	3
	20
Resignations:	
Voluntary	82
Required because of—	
Unsatisfactory services	1
Unsatisfactory conduct	1
Unsatisfactory conduct and services	2
Incompetency	1
	87
Removals:	
Causes—	
Unsatisfactory conduct and services	3
Absence without authority	2
Absence without authority and neglect of official correspondence	1
False statements in connection with the awarding of a contract, receiving reimbursement from a State government for an account settled by the United States, and insubordination	1
Insubordination	1
Willful neglect of duty	1
Dropped from the rolls after extended furloughs	2
	11
Dropped from rolls at termination of probationary period:	
Causes—	
Unsatisfactory conduct and services	1
Physical inability to perform work required	1
	2
Deaths	2

UNCLASSIFIED SERVICE.

Appointments:	
Permanent—	
Unclassified laborers at $600	2
Unclassified laborers at $480	1
Student assistants at $300	4
	7
Promotions (each to next higher grade)	2
Reduction, necessitated by employee's return to duty from leave without pay	1
Resignations, voluntary	5
Removal, services no longer required	1

ABSENCE.

Average, with pay, per employee, during calendar year 1906.

	Sickness.	Annual leave.
	Days.	*Days.*
99 per cent males	1.0	7.6
Washington, D. C.:		
Males	3.4	26.1
Females	3.6	26.8
Entire service	1.9	12.7

STATISTICS OF THE SERVICE.

The following tables show the numerical strength of the Bureau and the highest, lowest, and average salaries paid in the commissioned grades:

Numerical strength of the Weather Bureau, June 30, 1907.

At Washington, D. C.:		
Classified	175	
Unclassified	12	
		187
Outside of Washington, D. C.:		
Classified	502	
Unclassified	13	
		515
Total commissioned employees		702
Additional employees outside of Washington, D. C.:		
Storm warning displaymen	175	
River observers	371	
Cotton region observers	143	
Corn and wheat region observers	133	
Rainfall observers	85	
Sugar and rice region observers	9	
Total noncommissioned employees		916
Total paid employees		[a] 1,618

[a] This total embraces all paid persons connected with the Bureau on June 30, 1907, except 20 commissioned employees on leave of absence or furlough without pay on that date for three months or more.

Persons serving without compensation (except through the distribution of Government publications):		
Cooperative observers and correspondents (omitting 83 under pay as river and rainfall observers, already enumerated above)	5,311	
Cooperative storm warning displaymen	79	
Total cooperatives		5,390
Total numerical strength		[a] 7,008

Distribution of the commissioned force, June 30, 1907.

In Washington, D. C.:	
Accounts Division	[b] 13
Climatological Division	7
Editor Monthly Weather Review	2
Executive branch	[b] 16
Forecast Division (including River and Flood Service)	14
Division of Ocean Meteorology	9
Instrument Division	10
Library	4
Division of Meteorological Records	17
Miscellaneous Mechanical Work	5
Publications Division	45
Supplies Division	10
Telegraph Division	11
Captain of the watch (under direction of the chief clerk)	6
General messenger and laborer service (under direction of chief clerk)	18
Total	187
Outside of Washington, D. C.:	
57 stations with 1 commissioned employee	57
55 stations with 2 commissioned employees	110
37 stations with 3 commissioned employees	111
18 stations with 4 commissioned employees	72
10 stations with 5 commissioned employees	50
9 stations with 6 commissioned employees	54
2 stations with 7 commissioned employees	14
3 stations with 8 commissioned employees	24
1 station with 9 commissioned employees	9
2 stations with 10 commissioned employees	20
1 station with 14 commissioned employees	14
195 stations	[c] 535

In addition to the foregoing there are nine special observing (one-man) stations in the West Indies, mainly in operation during the hurricane season, a special observing station in Alaska, and a special repair station in Washington operated from October to April, inclusive.

[a] In the Annual Report for 1906, page 22, fifteenth line, the words "Total numerical strength," should have read "Total unpaid employees," making the total numerical strength 10,188. Also 3,683 "weather correspondents" were serving as "cooperative observers" and were counted twice. The actual numerical strength on June 30, 1906, was 6,505.

[b] One man devotes a portion of his time at the United States Capitol map stations.

[c] This number represents the normal station force. On June 30, 1907, there were actually on regular duty but 515 employees.

The following salary table omits persons on duty at special observing and substations, where the salaries are $25 a month or less, and where, as a rule, the tour of duty covers but a small fraction of the day and only certain seasons of the year.

Salaries paid in the commissioned grades.

Grades.	June 30, 1907.	
	Station.	Washington, D. C.
Classified grades:		
Highest salary	$3,000	$5,000
Lowest salary	360	450
Average salary	993	1,204
Unclassified grades:		
Highest salary	600	720
Lowest salary	300	240
Average salary	378	492

Average salary for all (station and Washington) is $1,025.

It is desired to invite attention to the increasing difficulty of recruiting the outside observing and messenger forces of the Bureau, a condition which, if allowed to continue, will seriously impair the efficiency of the service. While the total station force has been increased by only 10 per cent since 1904, from 487 to 535, it has been necessary in the observing force alone to increase the yearly appointments by 114 per cent, from 17 to 44, in order to maintain an effective working strength. The separations from the service were about equally divided between new appointees who soon became dissatisfied with the prospects for advancement and older employees who felt obliged to sever their connections with the Bureau in order that they might better their financial condition. In the case of the observing force the figures reported by the Civil Service Commission as regards examinations show that in the last two years there has been a marked falling off in the number of persons taking the examinations and in the percentage of those passing, while there has been a corresponding increase in the number of appointments from the eligible register. The figures are appended:

Year.	Examined.	Passed.	Appointed.
1904	214	104	17
1905	201	112	29
1906	(a)	.....	43
1907	180	25	44
Total	595	241	133

a No examination.

An additional examination was necessitated in 1907 by the exhaustion of the eligible register. At the present rate of appointing this supplemental register will be exhausted also at an early date, all of the eligibles thereon having been certified and more than one-half appointed as this report goes to press. The mere difficulty of securing eligibles is not, however, the most serious phase of the matter. It will be noticed that in 1904 and 1905 48 per cent and 55 per cent, re-

spectively, of those taking the examinations passed, while in 1907 but 14 per cent passed, and with relatively lower ratings, indicating a marked falling off in the educational qualifications of those taking the examinations, the scope of which remained the same. The situation made evident by the foregoing figures is particularly discouraging, since in a scientific bureau it is of first importance that the ranks be recruited from young men of education and ability, preferably having scientific or technical training. It is apparent that the low salaries and limited opportunities for advancement which the Bureau can offer are preventing these classes from seeking to enter its employ. There is probably no other bureau of the Government that is so greatly in need of young, alert, and well-educated men.

The difficulties presented in the case of the messenger force are of longer standing. As early as 1904 it was found impossible to hold boys in the service at the small salaries paid—$360 a year for a beginner. Previous to that time it was the custom to order messengers from one station to another, and in filling vacancies certification was often made of boys residing at distant points. It was found that boys could not maintain themselves away from home on the salaries paid, and with the view of relieving the situation it was recommended to the Civil Service Commission, and by them approved, that future certifications should be made from local eligible lists, to be established when necessary for Weather Bureau appointments alone. It was hoped to secure by these means the services of boys residing at home who would be willing to serve at the low salaries permitted. This method of securing eligibles has been given a thorough trial, but has not effected the relief sought, and the situation as regards the messenger force has again become acute. It is of the utmost importance to the public interests that the numerous daily forecast telegrams, cards, and maps of the weather service shall be handled expeditiously, and this can not be done by a messenger force rendered inefficient through constant changes in the personnel. During the last fiscal year alone there were 34 appointments to fill vacancies in a force numbering, normally, 97.

INCREASE IN SALARIES.

I believe that the salaries paid to officials in charge and to the first assistants at local stations of the Weather Bureau are commensurate with the salaries paid for comparable work by other institutions of the Government and by business firms, but the compensation of observers and messengers in the lower grades is inadequate and insufficient to properly maintain them under the present conditions of high cost of clothing, rents, food, and other necessities of life. The per annum salary formerly paid to assistant observers just entering service was $840, but on my recommendation it was reduced to $720. I believe this to be proper compensation for these new employees, because for six months or more they render but little service and require much of the time of station officials in teaching them the details of the work and the requirements of the position. Again, they are probationers who are being tested for their general fitness for the work. I believe, therefore, that for the first year of service a salary of $720 per annum is sufficient, but those worthy of retention should be advanced to the next grade—$840 per annum—at the end of one year. These em-

ployees are paid from the lump-sum roll, which is carefully and economically apportioned, but the amount available is not sufficient to advance them until after two or more years' service. On July 1, 1907, there were 20 assistant observers receiving the compensation of $720 per annum who had more than one year's service, and who should be promoted. I have therefore recommended that $3,000 be added to the station salary fund to accomplish the advancement of assistant observers after one year of satisfactory service.

The initial salary paid to messenger boys is $360 per annum, and it has not been possible to advance these employees to the next grade—$480 per annum—until after two years' service, oftener for a longer period. The salary is so small that it does not induce intelligent and ambitious boys to enter the service. Resignations are frequent and result in much annoyance to the officials in charge of local offices. A good, faithful messenger is a valuable employee. He knows the operating details of an office, and has many duties that can not be assigned to employees of a higher class. When it becomes necessary to break in a new messenger, it takes up much of the valuable time of higher employees in order to prevent confusion in the office. The salary of the position should be sufficient to content boys for a few years, until they fit themselves for higher duties and are old enough to assume them. There are at present about one hundred messenger boys on duty outside of Washington. Their compensation should be increased, and I have recommended that $12,000 be added to the station salary fund in order to provide promotion of $10 per month for those in the lower salary grades.

PRINTED WEATHER MAPS.

Daily weather maps in printed form are issued from 25 stations and by duplicating process from 81 stations. The latter is not satisfactory, because at best the maps have not a neat appearance, and whenever the issue is in excess of about 150 copies they become blurred and almost illegible. These maps, for which there is a large public demand, should be issued in neat printed form, and in order to accomplish this the services of about 10 additional printers are required. I have recommended that $12,000 be added to the station salary fund for this purpose.

INSTRUCTION OF NEW OBSERVERS.

When the weather service was a military institution, new observers were trained in their duties at a military school located at Fort Myer, Va. Since the abandonment of that school new appointees have been sent direct to various stations of the service where their services were required. Most of the duties of an observer are technical, and it requires considerable time and patience to instruct them in the taking, reducing, and recording of meteorological observations, transmitting reports, making weather charts, and preparing meteorological forms. Experience has shown that whenever new observers are sent to a station, they are not capable of performing the greater part of the office work, but, on the contrary, they cause additional work, and it consumes much of the time of the official in charge, or of a trained assistant, in teaching them their duties. The

available force at hand has not been sufficient to make these new employees extras to the regular force of the stations, but almost invariably they take the place of trained employees. This is often embarrassing and causes errors and delays in the work, which, under the circumstances, can not be avoided. In large cities and commercial centers where there is a weather station, maps are prepared on the floors of local boards of trade and other similar institutions, and the data placed thereon have become a factor in the business transactions of the United States. It is so arranged that the preparation of these maps is begun at the same moment of time in all sections of the country so that there may be no discrimination. It is apparent, therefore, that skilled and rapid employees are essential for this work.

A slow and inefficient man might give traders in another city the advantage of fifteen to twenty minutes, and, with direct telegraphic communication between the trading institutions in various cities, this advantage is considerable. It has frequently happened that members of a board of trade in one city have received telegraphic weather information from the board in another city before it was recorded on the map in his own institution. Complaints regarding such defective service are justifiable, but the local officials of the Weather Service are obliged to use their limited force to the best advantage, and when they have one or more untrained observers they are not always able to remedy the difficulty at once. Again, the work at the various meteorological stations is interdependent, and delay in the taking and recording of an observation at one results in a corresponding delay at every station at which these reports are received. It will be understood how essential skill, rapidity, and efficiency are to this work when it is remembered that promptly at 8 a. m., seventy-fifth meridian time, observers located in every part of the United States must take observations of all the elements of the weather, make mathematical reductions, record them, and place them on the telegraph wires, so that by 9:30 a. m., or in ninety minutes, these observations may be received at the various stations of the United States, recorded on maps, and forecasts and warnings issued therefrom. For the efficient administration of this service there should be a school of instruction where new employees may be thoroughly taught their duties, and slow or inefficient ones weeded out, and so make it possible to assign to stations only men who are trained and efficient. The Central Office at Washington is the logical place for this training, because here the new employees may, with little or no additional expense, have practical training in all the lines of work and be under the guidance and instruction of the most expert men of the service. A training of three to six months would be required, and a constantly recruited class of 14 men would be enough to provide for the exigencies of the service due to deaths, resignations, dismissals, etc. I have recommended that $10,000 be added to the station salary fund for that purpose.

REPORT OF THE CHIEF OF THE BUREAU OF ANIMAL INDUSTRY.

U. S. DEPARTMENT OF AGRICULTURE,
BUREAU OF ANIMAL INDUSTRY,
Washington, D. C., October 31, 1907.

SIR: I have the honor to transmit herewith a report of the operations of the Bureau of Animal Industry for the fiscal year ended June 30, 1907, together with plans and recommendations for the future.

Respectfully,

A. D. MELVIN,
Chief of Bureau.

Hon. JAMES WILSON,
Secretary of Agriculture.

GROWTH DURING THE YEAR.

The fiscal year ended June 30, 1907, witnessed an unprecedented increase in the work of this Bureau. This was due mainly to the extension of the meat inspection under the new law of June 30, 1906, and partly to the work of eradicating the southern cattle tick, which was begun in the summer of 1906. The large and rapid growth during the year is well shown by the increase in the number of employees and in the expenditures for the maintenance of the work. Both of these items were more than doubled, the Bureau force having grown from 1,460 on July 1, 1906, to 3,152 a year later, while the expenditures rose from $1,510,868.20 for the fiscal year 1906 to $3,111,528.62 for the fiscal year 1907.

The following statement presents a comparison of the number of employees on the rolls of the Bureau, classified by lines of work, at the beginning and end of the fiscal year:

Force employed in the Bureau of Animal Industry in 1906 and 1907.

Class of work.	Number of employees—	
	July 1, 1906.	July 1, 1907.
Administration	43	78
Meat inspection	981	2,290
Inspection of animals for export	26	24
Inspection and quarantine of imported animals	30	26
Control and eradication of contagious diseases of animals	236	548
Scientific investigations concerning animal diseases	83	105
Dairy investigations and inspection of dairy products	40	51
Animal husbandry investigations	21	30
Total	1,460	3,152

The expenditures for the various lines of work for the fiscal year 1907 are shown in the following statement, which includes accounts approved for payment up to August 28, 1907:

Expenditures of the Bureau of Animal Industry for the fiscal year 1907.

General administrative work	$82,805.00
Meat inspection (including inspection of animals for export)	2,159,474.12
Sheep scabies eradication	244,249.30
Cattle scabies eradication	88,689.34
Inspection of southern cattle	36,095.90
Eradication of southern cattle ticks	169,503.86
Supervision of transportation of live stock and inspection of vessels	35,084.85
Inspection and quarantine of imported animals	31,525.98
Inspection work relative to contagious diseases, testing animals with mallein and tuberculin, etc	8,485.22
Scientific investigations concerning diseases of animals	123,705.57
Dairy investigations	78,094.78
Inspection of renovated butter factories and markets	15,637.96
Animal husbandry investigations	38,176.74
Total	3,111,528.62

MEAT INSPECTION UNDER THE NEW LAW.

It is seen from the above statement that only $2,159,474.12 was expended for meat inspection out of the appropriation of $3,000,000 made by Congress for this purpose, but it should be remembered that the law was in full force but nine months of the fiscal year and that the service was constantly expanding during the year. The rate of expenditure during the first half of the period was considerably below the normal requirements under the new law.

The operation of the new law has, on the whole, been satisfactory and has shown the wisdom of that measure. This law has overcome several defects of the old law and has enabled the Bureau not only to extend the inspection, but to improve its efficiency. The important matters of sanitation of slaughtering and packing establishments, preparation of meats and products, use of chemicals, preservatives, etc., and prevention of fraudulent labeling are now controlled and regulated, whereas formerly the Bureau had no authority over them, but was practically confined to an inspection before and at the time of slaughter to determine the health of the animals. The interstate transportation of meats and meat food products is also now under control. The Federal meat inspection is on a higher plane than ever before, and public confidence, which was unsettled by the agitation of the previous year, has been restored.

The Department's regulations governing the meat inspection are based upon scientific knowledge and principles and upon the experience of many years. Regulations under the new law were issued under date of July 25, 1906, and additional regulations, amendments, and rulings were issued later as circumstances required and as the work developed.

In meat inspection it is sometimes difficult to determine how to dispose of carcasses affected in some degree with abnormal conditions—in other words, to decide just where to draw the line between what should be condemned and what passed. The regulations are made as explicit as possible, and yet much must be left to the judg-

ment of the inspectors. Most animals are in such a good state of health that there is no question as to the wholesomeness of their meat, while others may be so diseased as to leave no doubt that their carcasses should be condemned. But at some point between these two extremes there arises a question as to whether a carcass or part should be passed or condemned. Sometimes an affection is so slight and so localized as not to impair the wholesomeness of the meat, and by removing an organ or cutting away a small portion of the carcass the remainder may be safely passed. The public should be protected against diseased and unwholesome meat, yet good meat should not be needlessly destroyed. In questions of this sort the Department has endeavored to be on the safe side, and its regulations and practice in this respect are more strict than those of European countries.

The Secretary of Agriculture, deeming it wise to have the benefit of the opinions and advice of a commission of experts outside of the Department with regard to these matters, appointed such a commission early in the year 1907, to consider and advise relative to those portions of the Department's meat-inspection regulations relating to the disposition of carcasses affected with various diseases and abnormal conditions. The membership was as follows: Dr. William H. Welch, professor of pathology, Johns Hopkins University, chairman; Dr. L. Hektoen, professor of pathology, University of Chicago; Dr. M. J. Rosenau, director of the hygienic laboratory, United States Public Health and Marine-Hospital Service; Dr. Joseph Hughes, president of the Chicago Veterinary College; Dr. V. A. Moore, professor of comparative pathology, Cornell University; Dr. Leonard Pearson, dean of the veterinary department of the University of Pennsylvania, and Dr. Charles Wardell Stiles, chief of the division of zoology, hygienic laboratory, United States Public Health and Marine-Hospital Service, secretary.

This commission held sessions in Washington during February, and under date of July 29 submitted a report. The general conclusions reached are stated in the following words: "If there be any general error in the regulation this is in favor of the public rather than in favor of the butchers and packers."

The specific suggestions made by the commission are being considered in the preparation of revised regulations.

A change in the method of marking fresh meats with the inspection legend has been adopted by which a saving estimated at between $400,000 and $500,000 a year on the cost of the label previously used is being effected. The new method consists in the use of a metal stamp with special ink prepared by the Bureau.

NEED FOR LOCAL INSPECTION.

The more rigorous and efficient the inspection, however, the greater becomes the danger from uninspected meats, as the tendency of a strict inspection is to cause diseased animals to be sent to slaughterhouses having no inspection. The Federal inspection can and does insure the wholesomeness of the product of establishments doing an interstate and export business, but there the Federal power ends. The Government can not reach the numerous small local establishments whose product is sold entirely within a State. Some of the worst conditions have been found at places of this kind.

Here arises the necessity for the Federal inspection to be supplemented by State and municipal inspection, if the public is to be fully protected. Pennsylvania has commenced what appears to be an efficient meat-inspection system. Similar measures are being considered in other States, and several cities have municipal inspection of varying degrees of efficiency.

In some places the local inspection consists merely of an examination of meat as displayed for sale in the market and the condemnation of any that may be tainted or spoiled. Such inspection is of very little benefit to the public, as the average purchaser is able to determine when meat is tainted. What is of much greater importance is to protect the public where it can not protect itself—by excluding diseased meat from consumption, and especially meat from animals affected with diseases communicable to man. In many cases an animal may be diseased without this being apparent in the dressed carcass. It is therefore essential that there should be a careful inspection of the animals by competent veterinarians at the time of slaughter. No inspection system which omits this feature can be considered efficient. In order to carry on municipal inspection in a practical way there should be central abattoirs, either private or municipal, at which all slaughtering should be concentrated. With such abattoirs the sanitation could be better controlled and the inspection carried on systematically and with a smaller force than where the work is scattered.

In the absence of adequate local inspection the consumer can still be assured of wholesome meats by insisting on having none but those bearing the Government stamp, providing the purchaser uses reasonable judgment in selecting meats which have not spoiled since the time of inspection.

SUSPENSION OF MICROSCOPIC INSPECTION.

As the microscopic inspection of pork for trichinæ has been discontinued, perhaps the reasons for this action should be made plain. This inspection was inaugurated in 1892 to meet the requirements of Germany and other countries which forbade the importation of American pork unless it had been microscopically inspected. This inspection was applied, however, only to pork intended for export to such countries. Experience has shown that under practical conditions a reliable inspection for trichinæ is not possible. In numerous instances trichinous pork has been examined as many as twenty or thirty times before the parasites were found, and in practice it is out of the question to make so many examinations. The failure of microscopic inspection to exclude trichinous pork has been fully demonstrated by the experience of Germany, where a very elaborate system is in operation, with a force of inspectors variously estimated at 25,000 to 100,000, and where, nevertheless, many cases of trichinosis have occurred from eating inspected pork. It was found that some foreign governments, although requiring certificates of microscopic inspection by the United States Government, paid no attention to these certificates, but made an additional inspection of their own, on the result of which depended the admission of the products. In view, therefore, of the expense and the ineffectiveness of the microscopic inspection it was decided to stop it.

This microscopic inspection for trichinæ has never been carried on or considered necessary for the protection of the American public. The danger of contracting trichinosis comes from eating pork in a raw, uncured state, and this is not the custom among the people of this country. The trichina parasites are destroyed by thorough cooking or curing. Consumers should understand that the Government mark "Inspected and passed" does not guarantee that the meat has been inspected for trichinæ. In all cases, whether pork has been inspected or not, it should be thoroughly cooked or thoroughly cured before it is used for food.

Cases of trichinosis have occurred in this country, and it is suggested that in communities where the habit exists of eating raw or underdone pork the local officials of such communities either try to discontinue this habit or establish inspection stations where such meat can be brought for examination, for although it is not believed that the inspection will eliminate all cases of trichinosis, the disease may be reduced to a minimum.

IMPROVEMENT OF THE MILK SUPPLY.

In the general movement for wholesome food a matter of great importance is a sanitary milk supply. Milk is more generally and extensively used as food than any article except bread. Because of its liquid state it is particularly susceptible to contamination, and as it is usually consumed raw it becomes especially dangerous when disease germs gain entrance into it. The subject of improving the milk supply has recently received considerable attention from health officers and from the public.

The Bureau, through its Dairy, Biochemic, and Pathological divisions, has made a special investigation of the milk supply of the city of Washington, in cooperation with the District authorities, with the result that very unsatisfactory conditions have been disclosed. A large proportion of dairy cows were found affected with tuberculosis, and the sanitary conditions in many dairies were very bad. The average rating of all dairies supplying milk to the city was but 45.03 points, according to a score card arranged by the Dairy Division, 100 representing perfect. It is believed that these conditions are better rather than worse than those existing with regard to the milk supply of most other large cities. Butter and cheese, besides milk, are liable to be affected by insanitary conditions.

This is more than a local problem. It affects the welfare of the country at large, and much of the milk and other dairy products enter interstate commerce. It therefore seems important that the subject should be taken up by the Federal Government. The work being done under the meat-inspection law should be supplemented by measures to protect the public from disease-carrying and unwholesome dairy products. It is not enough to inspect such products after they are prepared. The stream must be purified at its source. The health of the cows must be examined into, and sanitary conditions must be enforced in the production, handling, and preparation of the products. There are several lines of procedure by which the Federal Government can contribute to the betterment of the supply of dairy products. Some of these are to make a comprehensive investigation of sanitary conditions at dairy establishments and of the health of

dairy cows throughout the country, placing the information before local authorities and cooperating with them to remedy bad conditions; to require that all dairy products transported interstate or exported shall have come from healthy cows and have been produced and handled under sanitary conditions; to examine and test cows and to enforce sanitation in all dairy establishments the products of which enter interstate or foreign commerce, and to make the tuberculin test of dairy cows in any other cases where this is required or requested. Inspected products or the products of inspected and approved dairies should be marked for identification, as in the meat-inspection service.

In view of the position taken by Congress in passing the meat-inspection law it would seem all the more logical for that body to pass a law giving specific authority for the inspection of all dairy cows and dairy establishments whose products are to enter interstate or export trade, in order that the products of diseased cows may be excluded.

From investigations so far made it appears that the conditions surrounding the production of milk and other dairy products, with regard to disease and sanitation, are fully as great a menace to the public health as were the reported conditions in the meat industry which prompted the passage of the meat-inspection law. It is therefore recommended that Congress be asked to grant the authority suggested and to appropriate the necessary funds. With the present organization and facilities of the Bureau the additional expenditure required for such inspection service would probably not be very large. There would arise, however, the question of the disposal of the animals found diseased. The safest method would be to slaughter such animals, and this would mean a heavy loss to the owners unless some means of indemnity should be provided. It seems only fair that if animals are slaughtered in the interest of the public health the public should bear at least a portion of the loss, and if Congress and State legislatures take this view some provision should be made for funds with which to compensate owners of condemned animals.

TICK ERADICATION.

Encouraging progress has been made in the eradication of cattle ticks from the Southern States. This work, which was begun in the summer of 1906 under an appropriation by Congress of $82,500 "to enable the Secretary of Agriculture to undertake experimental work in cooperation with State authorities in eradicating the ticks transmitting southern cattle fever," is no longer an experiment. The results already accomplished demonstrate that the extermination of this costly pest is not only possible but practicable, though several years may be required for the completion of the work. From January 1 to October 31, 1907, there were released from quarantine, or prepared for release in the near future, areas aggregating over 40,000 square miles. This means that the cattle of an area almost as large as the State of Tennessee are, for the first time in years, to have an unrestricted market.

While for the most part the State authorities have cooperated, it is unfortunate that in some sections the Bureau's work has met with a lack of support and even with active opposition, this condi-

tion probably being due to a failure to realize the benefits to follow from the work. It therefore seems best not to resume operations in such localities until public sentiment changes, as more can be accomplished by using the available funds in sections where the work is appreciated and supported by those most directly interested.

Congress appropriated $150,000 for the work of tick eradication during the fiscal year 1907–8, but still larger amounts must be provided if it is to be prosecuted on a sufficiently large scale to bring success within a reasonable time, and it is recommended that Congress be asked to grant an increased sum for this work. Judging the requirements by the work of 1907, and looking to the needs of the immediate future, it is believed that $50,000 additional should be made available for the remainder of the fiscal year 1908 and that $250,000 could be advantageously and judiciously expended during the fiscal year 1908–9. The great benefit which will accrue to the cattle industry of the South and incidentally to the country at large from the success of this work will abundantly justify the necessary expense.

TRANSPORTATION OF LIVE STOCK.

Inspectors of the Bureau stationed at the principal live-stock centers have been required to report all cases where live stock have been confined in cars without feed or water in excess of the limit provided by law. These reported violations have been referred to the Department Solicitor, and, where the evidence of the violation has appeared sufficient, prosecution has been recommended.

While the new law has been much better observed than the old one was, many violations still occur. However, the cruelty to the animals could be much further reduced by requiring a minimum rate of speed at which they shall be carried.

SCABIES ERADICATION RETARDED BY REMOVAL OF FENCES.

Good progress was made during the fiscal year toward eradicating sheep scab in the West, but the eradication of scabies of cattle has been greatly retarded in some localities by the removal of fences from the public domain in conformity with an act of Congress.

Most stock owners are not only willing but anxious to assist in freeing their cattle of disease, but a small minority are not, and where cattle mingle as they do upon the open range, without any restriction, it is very difficult to enforce proper sanitary measures. It is highly important, in the eradication of disease, for stock owners to have some control over the lands occupied by their animals, and in this respect the enforced [illegible] al of fences has been a great disadvantage. It would be of [illegible] stance in combating contagious diseases of live stock if th[illegible] d l[illegible] so amended as to permit the leasing and fe[illegible] n. Fortunately, scabies or mange is a co[illegible] if some plague such as [illegible]derpest, foo[illegible] agious pleuro- [illegible] ould be i[illegible] onditions fol- [illegible] nd would in [illegible]

[illegible] lations in [illegible] range con- [illegible] ences, and

that more stringent measures were required if any substantial headway was to be made. New regulations were accordingly put into effect after careful consideration of the situation, and better results are expected. The Bureau has endeavored to suppress this disease without any greater hardship to cattle owners than is necessary, but recent conditions have demanded more rigorous measures than were previously applied, and while some inconvenience may be caused for a time, it is believed that unless measures fully as strict as the present regulations are enforced the Department might as well abandon all efforts to eradicate the disease. There is no doubt that the ultimate results will fully justify the temporary inconvenience.

NEED FOR ANOTHER EXPERIMENTAL FARM.

The need for an experimental farm near Washington for breeding, feeding, and dairy investigations, as pointed out in the previous year's report, is becoming more and more apparent. Work of this character should obviously be kept separate from that carried on at the present experiment station for contagious diseases. It is hoped that Congress may be willing to provide for the purchase of a separate farm for investigations in breeding and feeding live stock and in dairying.

ORGANIZATION.

The organization of the Bureau remains practically the same as shown in the previous report. The work carried on during the fiscal year in the various branches of the Bureau is set forth in the following pages, which are based on reports made by the respective heads of those branches to the Chief of the Bureau.

WORK OF THE INSPECTION DIVISION.

The work of the Inspection Division, in charge of Dr. R. P. Steddom, chief, consists of two main lines—(1) the meat inspection and (2) the field work for the control and eradication of contagious diseases of animals. The latter comprises the inspection of southern cattle and the supervision of their movement when forwarded from the area quarantined on account of Texas or tick fever, the work for the extermination of the southern cattle tick which spreads this disease, and the work for the eradication of scabies of sheep and cattle in the West.

THE MEAT INSPECTION.

The new meat-inspection law approved June 30, 1906, and effective October 1, 1906, which made mandatory the "post-mortem examination and inspection of the carcasses and parts thereof of all cattle, sheep, swine, and goats to be prepared for human consumption * * * for transportation or sale as articles of interstate or foreign commerce," has resulted in the extension of the work of this division to a very largely increased number of establishments; this, together with the provisions of the same law requiring the supervision of the processes of preparation of meats and meat food products prepared in such establishments, and the reexamination of such meats and products, have made necessary a force of employees which at the close of the fiscal year was more than double the number required at any previous time in the history of the Bureau.

NUMBER OF ESTABLISHMENTS AND CITIES.

The following table shows the number of establishments and the number of cities and towns where the inspection of meats and meat food products was conducted in each fiscal year since 1891. The figures relating to 1907 show an increase of 334.4 per cent in the number of establishments and of 220.7 per cent in the number of cities and towns, as compared with the previous fiscal year.

Number of establishments and cities where meat inspection has been conducted, fiscal years 1891 to 1907.

Year.	Establishments.	Cities and towns.	Year.	Establishments.	Cities and towns.
1891	9	6	1900	149	46
1892	23	12	1901	157	52
1893	37	16	1902	155	50
1894	46	17	1903	156	50
1895	55	19	1904	152	51
1896	102	26	1905	151	52
1897	128	33	1906	163	58
1898	135	35	1907	708	186
1899	139	42			

MARKET INSPECTION.

Inspection is maintained at 29 markets as a matter of convenience to dealers who handle meats issuing from establishments having inspection, and who in supplying their customers find it necessary to ship orders into another State. The volume of this business is so small that no separate record has been kept of it, the stamps, seals, etc., used in identifying such consignments being included in the regular establishment records.

EXEMPTION FROM INSPECTION.

The present meat-inspection law provides that it shall not apply to animals slaughtered by any farmer on the farm nor to retail butchers and retail dealers in meat and meat food products supplying their customers. Based upon this provision of the law, the regulations of the Department provided for the granting of formal certificates of exemption to retail butchers or retail dealers engaged in supplying their customers through the medium of interstate or foreign commerce, and required that all meats and meat food products shipped under such certificates be formally certified by the shipper as sound, healthful, wholesome, and fit for human food. Compilations made from these shippers' certificates indicate that in round numbers the shipments made thereunder to June 30, 1907, approximate twenty million pounds.

A great many certificates of exemption granted in the fall of 1906, when it was impossible to make a thorough investigation of the establishments, have since been canceled because upon inspection the establishments were found to be insanitary; certificates have been withheld in other cases for the same reason, either permanently or until the places were put in sanitary condition; and it was found upon investigation that certificates were held in some cases by establishments that should operate under inspection, and these certificates were accordingly withdrawn and inspection established. In all there were outstanding at the close of the fiscal year 1907 about 4,000 certificates of exemption.

ANTE-MORTEM INSPECTION.

Since October 1, 1906, the regular ante-mortem inspection at slaughtering centers has been confined to animals that were about to be slaughtered, while those that were not to be slaughtered at local establishments were inspected for contagious diseases only. In view of this change the column heretofore appearing in the table showing ante-mortem inspections, under the heading "For other cities and miscellaneous buyers," is not included in the following statement, although such inspections were made during the first quarter of the fiscal year, as follows: Cattle, 1,457,749; calves, 207,309; sheep, 1,870,755; swine, 2,616,480; total, 6,152,293.

Ante-mortem inspections of animals about to be slaughtered, fiscal year 1907.

Kind of animals.	Passed.	Suspected.[a]	Total.
Cattle	7,606,653	25,445	7,632,098
Calves	1,760,203	3,382	1,763,585
Sheep	9,723,016	1,295	9,724,311
Swine	31,797,790	25,709	31,823,499
Goats	55,540	1	55,541
Total	50,943,202	55,832	50,999,034

[a] This term is used to designate animals found diseased or suspected of being diseased on ante-mortem inspection, most of which are afterwards slaughtered under special supervision, the final disposition being determined on post-mortem inspection.

The foregoing table shows an increase of 20.5 per cent over the ante-mortem inspections made for official establishments during the previous fiscal year.

POST-MORTEM INSPECTIONS.

The following table shows the number of inspections made at time of slaughter, an increase of 18.7 per cent over the previous year:

Post-mortem inspections, fiscal year 1907.

Kind of animal.	Passed for food.	Passed for lard and tallow only.	Condemned.	Total.
Cattle	7,593,220	564	27,933	7,621,717
Calves	1,757,112	48	6,414	1,763,574
Sheep	9,672,200	152	9,524	9,681,876
Swine	31,639,620	70,401	105,879	31,815,900
Goats	52,106	1	42	52,149
Total	50,714,258	71,166	149,792	50,935,216

Included in the foregoing table are the post-mortem inspections of animals rejected or suspected on ante-mortem inspection, and the final inspection of carcasses that were retained[a] for disease or other cause at time of slaughter.

[a] This term is applied to carcasses held on suspicion on first post-mortem examination, to be subjected later to more thorough examination for determining final disposition.

The various diseases and conditions for which carcasses and parts were condemned and tanked are shown in the following table:

Diseases and conditions for which condemnations were made on post-mortem inspection, fiscal year 1907.

Cause of condemnation.	Cattle.		Calves.		Sheep.		Swine.		Goats.
	Carcasses.	Parts.	Carcasses.	Parts.	Carcasses.	Parts.	Carcasses.	Parts.	Carcasses.
Tuberculosis	19,305	10,530	68	4			65,618	364,559	
Actinomycosis	661	22,081		5		2			
Hog cholera and swine plague							21,506	729	
Tumors and abscesses	180	57,547	62	31	402	59	1,483	32,526	3
Septicemia, pyemia, and uremia	917		234		779		5,545		1
Pregnancy and recent parturition	458				55		323		
Pneumonia, pleurisy, enteritis, hepatitis, nephritis, metritis, etc	1,376		656		1,093		4,540		4
Injuries, bruises, etc	2,290	2,262	464	43	793	31	592	6,270	1
Lymphadenitis					1,360	4			4
Immaturity			3,585						
Sexual odor							816		
Miscellaneous	2,746	754	1,345	162	5,042	200	5,456	32,077	29
Total	27,933	93,174	6,414	245	9,524	296	105,879	436,161	42

SUPERVISING PREPARATION OF MEATS AND PRODUCTS.

Under the new law the inspection does not end with the examination of the carcass at time of slaughter, but extends to the subsequent preparation of the meats and meat food products. The latter service represents the work of a large number of Bureau employees, the total weight of the products so prepared and processed during nine months of the fiscal year being nearly four and a half billion pounds, as shown in the following table:

Table showing the amount of meats and meat food products prepared and processed under Bureau supervision, October 1, 1906, to June 30, 1907.

Kind of product.	Weight.
	Pounds.
Beef placed in cure	137,969,046
Pork placed in cure	2,248,886,322
All other classes placed in cure	6,839,268
Sausage, chopped	267,760,463
Canned beef	82,386,711
Canned pork	16,991,513
All other canned meats	5,817,640
Beef extract	746,151
Lard	1,003,602,287
Compound lard	353,549,027
Edible tallow	34,774,806
Oleo oil	169,129,640
Stearin	80,066,297
Oleomargarine and butterine	55,694,037
Total	4,464,213,208

The following amounts of meats and meat food products were condemned on reinspection from October 1, 1906, to June 30, 1907: Beef, 8,925,179 pounds; pork, 5,844,526 pounds; mutton, 77,770 pounds; veal, 27,112 pounds; total, 14,874,587 pounds.

INSPECTION CERTIFICATES FOR EXPORT MEATS AND PRODUCTS.

Under the present law vessels carrying export shipments of meats and meat food products are allowed clearance only when such shipments are covered by certificates of inspection issued by inspectors of the Bureau, unless such shipments are destined to countries for which the Secretary of Agriculture has waived the certificate requirements as provided by the law; and while for a time certificates were issued only for shipments to Great Britain and Ireland and continental Europe, it has been the general policy to issue certificates for exports to other countries when they were requested.

The following table shows the number of certificates issued to cover export shipments of meats and meat food products during the fiscal year:

Inspection certificates issued for export shipments of meats and meat food products, fiscal year 1907.

Kind.	Number.	Product covered.			
		Beef.	Mutton.	Pork.	Total.
		Pounds.	*Pounds.*	*Pounds.*	*Pounds.*
Regular	71,125	486,796,494	3,511,444	632,428,670	1,122,736,608
Special	33,976	4,588,895	4,745	231,162,533	235,756,173
Total	105,101	491,385,389	3,516,189	863,591,203	1,358,492,781

In addition to the above there were 1,661 "animal product" certificates issued to cover inedible animal products, such as hoofs, horns, bones, casings, inedible tallow, etc., amounting to 16,347,957 pounds.

The amount of meats and meat food products exported under Bureau certificates as indicated above shows an increase of 129.3 per cent over last year. This increase is due largely to the fact that, under the present law, lard, oleo oil, stearin, edible tallow, and other meat food products are now certified to, a thing that has not heretofore been done.

With reference to the foregoing table, attention is called to the provision of the present law under which meat food products for export to any foreign country may be prepared or packed in preservatives of kinds and in quantities not in conflict with the laws of the foreign countries to which the products are destined. It will be noted that there have been exported under this provision since October 1, 1906, 235,756,173 pounds of this character of product, including beef, mutton, and pork; this product was exported in 481,296 packages bearing "special" stamps as indicated in the following table, and was covered by 33,938 "special" certificates.

Table showing number of stamps issued for edible meats and meat food products and inedible animal products, fiscal year 1907.

Kind of stamps.	Number.
Regular	35,954,701
Special	481,941
Regulation 50	722,427
Animal product	50,323
Total	37,209,392

In addition to the above there have been used during the year 1,770,412 self-locking seals, for the identification of sacks and burlap-covered barrels containing meats and meat food products.

MICROSCOPIC INSPECTION.

There has been no microscopic inspection of pork during the fiscal year 1907. At the beginning of the year nine establishments had stocks of microscopically inspected pork on hand amounting to 4,448,361 pounds; of this amount, 8,870 packages, weighing 2,360,411 pounds, were exported under 238 certificates, during the months of July, August, September, and October, 1906, the remainder being disposed of as regular stock. The Bureau records of microscopically inspected pork were therefore closed with the month of October, 1906.

The following table shows by years the quantity of pork exported to countries requiring microscopic inspection during the entire period since the inauguration of that inspection:

Quantities of pork exported to countries requiring microscopic inspection, fiscal years 1892 to 1907.

Year.	Pounds.	Year.	Pounds.
1892	22,025,698	1900	55,809,626
1893	8,059,758	1901	35,942,404
1894	18,845,119	1902	33,681,229
1895	39,355,230	1903	19,108,341
1896	21,497,321	1904	9,020,521
1897	42,570,572	1905	14,721,935
1898	120,110,356	1906	26,566,409
1899	108,858,149	1907	2,360,411

CONTROL OF CONTAGIOUS DISEASES.

TEXAS FEVER.

The shipments of cattle during the quarantine season of 1906 from the area quarantined for Texas fever to northern markets for immediate slaughter show a falling off of 21.8 per cent as compared with the quarantine season of 1905, the whole number of such cattle being 1,000,629, shipped in 36,213 cars. There were also inspected in the provisionally quarantined areas of Texas and Oklahoma 126,238 head of cattle, which were permitted to be moved north for purposes other than immediate slaughter.

Supervision was exercised over 137,902 dippings in crude petroleum, and over the cleaning and disinfection of 36,895 cars.

On account of the unusual number of outbreaks of Texas fever in 1906 at points outside of the quarantined area, and because the regulations of the Secretary of Agriculture, effective April 15, 1907, made necessary some changes in the construction of quarantine pens, it was deemed advisable to make an investigation of the yards in which southern cattle are handled en route to northern markets and at destinations. A live-stock inspector has been detailed to this work. Wherever he finds upon a personal inspection that the regulations are not complied with, or that unsafe conditions exist,

the Bureau takes up the subject with the transportation and stockyard companies, requesting that the necessary alterations or improvements be made or that the use of the yards for handling southern cattle be discontinued. This work has already resulted in the improvement of a number of yards and the abandonment of some for the purposes indicated, and in every instance has called forth expressions of willingness to conform to the requirements of the regulations.

THE ERADICATION OF CATTLE TICKS.

During the fiscal year 1907 the work of eradicating cattle ticks has been pursued to a greater or less extent in the States of Virginia, North Carolina, South Carolina, Georgia, Alabama, Tennessee, Kentucky, Arkansas, Texas, Missouri, California, Louisiana, and the Territory of Oklahoma. Briefly stated, it has included 1,934,488 inspections of cattle, 539,674 of which were reinspections; thus indicating the inspection of 1,394,814 individual cattle, these making up 95,566 herds. The work has been done in cooperation with State authorities. At the close of the fiscal year the Bureau force engaged in this work numbered about 220 men. During the fiscal year there were released from quarantine areas amounting to approximately 20,000 square miles, and 20 counties previously in quarantine were admitted to provisional quarantine.

As by far the greater part of the work must be done during the warm months, the work of each season falls within two fiscal years. Instead, therefore, of confining this report to the fiscal year ending June 30, 1907, a statement has been prepared showing the operations and results from January 1 to October 31, 1907, as follows:

Summary of tick-eradication work and its results, January 1 to October 31, 1907.

State.	Inspections.		Disinfections.		Territory released or prepared for early release from quarantine.		
	Herds.	Cattle.	Herds.	Cattle.	Whole counties.	Parts of counties.	Area in square miles.
Virginia	47,083	120,234	1,549	8,710	6	.....	3,022
North Carolina	62,717	222,344	2,309	14,137	13	3	6,345
Georgia	13,148	53,293	7,999	32,631	3	.....	611
South Carolina	7,944	49,633	1,030	9,140	.....	.....	.....
Tennessee	112,931	654,394	21,386	122,952	6	6	3,545
Alabama	5,146	40,900	1,335	12,913	.....	.....	.....
Kentucky	5,835	27,664	1,424	6,769	.....	.....	.....
Louisiana	5,498	38,536	5,135	37,264	.....	.....	.....
Arkansas	12,212	96,380	1,461	9,952	5	.....	3,071
Oklahoma	13,504	136,043	4,132	43,215	.....	8	2,230
Texas	863	418,236	586	286,187	1	.....	660
California	2,930	450,277	1,800	191,925	3	2	21,486
Total	289,871	2,307,934	50,146	775,795	37	19	40,970

While most of the work has been and will doubtless continue to be done in areas contiguous to the quarantine line, encouragement has been given to local work in any part of the quarantined area in the assurance that when any considerable area is rendered tick free it

will be released from quarantine. Such effective work was done in two parishes of Louisiana that they are almost tick free and have already been given provisional quarantine.

It will be noted from the table that considerable work was done in Arkansas, a State which has heretofore been wholly below the quarantine line, and that as a result of this work five counties are to be entirely released from quarantine and one other county is to be given provisional quarantine.

Such good results were obtained in California that an area of about 20,000 square miles was released from quarantine August 1, 1907, and it is believed to be only a question of a short time when the infection in California will be confined to a comparatively small area along the southern coast.

Various approved methods for the eradication of ticks have been used, including pasture rotation, and dipping, spraying, and hand dressing with oil and oil emulsion. In sections where there were large herds and large ranches dipping or spraying on a large scale has been carried out, either alone or in connection with pasture rotation, while in other sections, where the cattle on some farms frequently consisted only of a cow or an ox team, hand dressing with oil was found to be the only practicable method. The Bureau furnished Beaumont crude petroleum, spraying outfits, and a dipping cage for demonstration work in different localities.

On December 5 and 6, 1906, there was held at Nashville, Tenn., a conference of Federal and State representatives to consider plans for the eradication of the cattle tick. The proceedings of the conference, consisting of papers and discussions, were published as Bureau Bulletin 97. It was suggested at this conference that meetings be arranged for instructing both State and Federal representatives who were to be engaged in the tick-eradication work in farm management, rotation of crops, and such other subjects as would better fit them for dealing with the question in the different localities where the work was to be done. Accordingly two meetings were held—one at Chattanooga, Tenn., the latter part of April, and the other at Richmond, Va., early in May. These meetings, which were really schools of instruction, were addressed by persons selected by the State authorities interested, and were of great value to all who attended them.

Besides Bulletin 97, above referred to, there were issued and widely distributed two circulars (97 and 110) giving information as to methods for exterminating the ticks.

SCABIES IN SHEEP.

The total number of inspections of sheep for scabies was 62,625,831 (including 68,264 goats inspected for scabies at slaughtering centers), and the total number of dippings was 12,133,466, of which 2,640,408 were redippings. This is an increase of 5.7 per cent over the inspections made during the previous fiscal year, and a decrease of 2.1 per cent in the dippings.

The following table shows the number of inspections and dippings of sheep for scabies, and the cars cleaned and disinfected on that account, for the past eight years:

Inspections and dippings of sheep for scabies, and cars cleaned and disinfected, 1900 to 1907.

Fiscal year.	Inspections.	Dippings.	Cars cleaned and disinfected.
1900	1,801,392	626,838	.....
1901	7,912,724	1,034,368	.....
1902	11,186,661	1,017,162	791
1903	16,444,370	2,167,002	752
1904	40,967,961	9,578,476	2,732
1905	53,680,786	16,873,659	7,965
1906	59,246,288	12,396,976	8,625
1907	62,625,831	12,133,466	6,275

The prevalence of sheep scab has been considerably reduced, and since the close of the fiscal year the quarantine for this disease has been removed from Wyoming and Idaho and it is expected that later it may be removed from Utah. Such headway has been made as to give hope that with another year's work the disease may also be eradicated from Colorado, New Mexico, and Arizona.

SCABIES IN CATTLE.

During the fiscal year 1907 there were 15,243,323 inspections of cattle for scabies and 466,623 dippings, of which 30,342 were redippings. These figures indicate an increase of 1.7 per cent in inspections and of 91.4 per cent in dippings as compared with the previous fiscal year.

The following table shows the growth of this work during the past four years:

Inspections and dippings of cattle for scabies, and cars cleaned and disinfected, 1904 to 1907.

Fiscal year.	Inspections.	Dippings.	Cars cleaned and disinfected.
1904	1,124,321	162,554	532
1905	14,085,267	563,394	29,897
1906	14,983,260	243,826	19,992
1907	15,243,323	466,623	15,009

SCABIES IN HORSES.

The total number of inspections of horses for scabies was 24,662, and the total number of dippings (or sprayings) was 1,319.

WORK OF THE QUARANTINE DIVISION.

The Quarantine Division, of which Dr. R. W. Hickman is chief, has under its supervision all work of the Bureau in connection with the exportation and importation of live stock, including the management of the quarantine stations at various ports of entry for imported animals. It also has charge of certain miscellaneous investigations of contagious diseases of animals.

INSPECTION OF VESSELS AND EXPORT ANIMALS.

The ships carrying exported animals are inspected and regulations as to fittings, equipment, ventilation, feed, water, attendants, etc., are enforced. During the fiscal year 741 vessels were inspected before clearance.

The following table gives statistics of inspection of live animals for export during the year:

Number of American and Canadian animals inspected for export, number rejected, and number exported, fiscal year 1907.

Kind of animals.	American.			Canadian.		
	Number inspected.	Number rejected.	Number exported.	Number inspected.	Number rejected.	Number exported.
Cattle	352,080	586	351,494	52,718	21	52,697
Sheep	96,933	15	96,918	31,544	64	31,480
Goats	15		15			
Swine	1,259		1,259			
Horses	1,258		1,258	3		3
Mules	479		479			
Donkeys	2		2			
Total	452,026	601	451,425	84,265	85	84,180

Most of the animals included in the foregoing statement as exported were shipped to Great Britain. There went to that country, of the American animals, 341,742 cattle, 57,315 sheep, and 763 horses, and all of the Canadian animals except 73 cattle and 4 sheep. Next in number were shipments to Canada, 38,029 sheep and 241 horses having been inspected for shipment to that country.

The following table shows the number of animals inspected on landing at the three British ports where the Bureau maintains inspection and to which the greater part of the exports go, also the number and percentage lost in transit. It will be observed that under the Bureau's supervision of this traffic the percentage of loss is very low.

Number of animals inspected at time of landing at British ports, and the loss in transit, fiscal year 1907.

From—	Cattle.			Sheep.			Horses.		
	Landed.	Lost.	Per cent of loss.	Landed.	Lost.	Per cent of loss.	Landed.	Lost.	Per cent of loss.
United States	341,071	455	0.13	55,786	351	0.63	788	1	0.13
Canada	55,720	148	.27	30,886	332	1.07	3		
Total	396,791	603	.15	86,672	683	.79	791	1	.13

NEW CANADIAN REGULATIONS.

On March 1, 1907, the new Canadian regulations relating to the quarantine of animals became effective, prohibiting the importation into Canada from the United States of branded or range western horses, mules, and asses, other than those which are gentle and broken to harness or saddle, and requiring the inspection of horses,

mules, or asses, other than those comprising settlers' effects, and that the same must be accompanied by (1) a satisfactory certificate of mallein test, dated not more than thirty days prior to the date of entry and signed by an inspector of the United States Bureau of Animal Industry, or (2) a similar certificate from a reputable veterinarian, provided such certificate is indorsed by an inspector of the Bureau of Animal Industry, or (3) a similar certificate from an inspector of the Canadian department of agriculture. Horses, mules, or asses forming part of settlers' effects are required to be inspected and to be accompanied by such certificates of mallein test, otherwise they are subject to the mallein test by an inspector of the Canadian department of agriculture at any time after their arrival in Canada, and if found to react within a period of six months from the date of entry they will be destroyed without compensation.

From March 1 to June 30, 1907, 214 horses were reported as inspected and subjected to the mallein test by Canadian official veterinarians at the border, 23 of which number have been rejected on account of reacting to the test. Seventy-six horses were inspected and tested by Bureau veterinarians for shipment to Canada, accompanied by satisfactory certificates of mallein test.

Three hundred and fifteen cattle intended for exportation to Canada were tested with tuberculin by the Bureau, and of these 290 were passed and 25 were rejected.

INSPECTION AND QUARANTINE OF IMPORTED ANIMALS.

In order to exclude from this country the contagion of the destructive animal diseases which exist in other parts of the world, it is necessary to use the utmost vigilance with regard to imported animals. All animals offered for importation are required to be inspected, and certain kinds when coming from certain countries are required to be quarantined for a sufficient period to insure their freedom from contagion. Cattle from Great Britain, Ireland, and the Channel Islands are imported subject to the test of a Bureau inspector stationed in Great Britain. Importations from Canada are received without quarantine when accompanied by a satisfactory certificate of tuberculin test by a Canadian official veterinarian, otherwise they are subjected to quarantine and the tuberculin test at the border line by an inspector of this Bureau.

Owing to the large number of zoological animals imported and the uncertainty as to their immediate origin, blood tests have been made in the case of all those whose natural habitat was such as to give rise to a suspicion of the possible presence in their blood of the causative agent of surra or rot, the *Trypanosoma evansi*. In an importation of 51 head of Indian cattle 17 animals were destroyed, owing to the demonstrated presence in their blood of this trypanosome.

The following table shows the number of imported animals inspected and quarantined and the number admitted on inspection without quarantine during the fiscal year:

Number of imported animals inspected, with and without quarantine, during fiscal year ended June 30, 1907.

QUARANTINED.

Port of entry.	Cattle.	Sheep.	Swine.	Goats.	Other animals.
New York	377	521	13		[a] 128
Boston	20	4	4		
Baltimore	130	65	3		
Canadian border ports:					
Beecher Falls, Vt	20	2			
Buffalo, N. Y	2	8			
Cape Vincent, N. Y	4		4		
Danforth, Me	3				
Eastport and Calais, Me	5	1		1	
Fort Fairfield, Me	30	20			
Hogansburg, N. Y	2		2		
Houlton, Me		13			
Island Pond, Vt		3	7		
Lowelltown, Me	1				
Massena, N. Y	1				
Niagara Falls, N. Y	1				
Ogdensburg, N. Y	2				
Richford, Vt	9			3	
St. Albans, Vt	31				
Sault Ste. Marie, Mich	3				
Vanceboro, Me	2	1	2		
Total quarantined	643	638	35	4	128

[a] Comprises 56 deer, 7 gnu, 15 antelopes, 26 camels, 11 llamas, 2 springbok, 1 mouflon, 4 zebus, 1 yak, 1 peccary, 1 Red River hog, 2 reindeer, 1 aoudad.

NOT QUARANTINED.

Port of entry.	Cattle.	Sheep.	Swine.	Horses.	Mules and asses.	Goats.	Other animals.
New York				3,252		[a] 6	[b] 7
Boston				227			
Philadelphia				16			
Baltimore				36			
Portland, Me				41			
New Orleans, La					2		
San Francisco				4			
From Mexico:							
El Paso [c]	13,844		7	9	3	7	[d] 2
Eagle Pass		2,994	11	215	19	12	[e] 12
Laredo, Tex				34	9		[d] 3
Nogales, Ariz	10,206		14	8	11		[d] 1
San Diego, Cal	1,070	1,818	59	289	72	219	
Calexico, Cal. [f]	3,683	3,229	219	201	374		
Los Algodones [g]				133	485		
Brawley, Cal. [h]				10			
Canadian border ports:							
Eastport, Me	1			11			
Calais, Me				32			
Houlton, Me	2	2		36			
Fort Fairfield, Me	58		2	39			
Vanceboro, Me	8	420		31			
Monticello, Me				11			
Bridgewater, Me				8			
Limestone, Me	2						
Lowelltown, Me	61			8			
Mars Hill, Me				14			
Van Buren, Me				12			
Danforth, Me	1			6			
Jackman, Me				4			
Island Pond, Vt	38	133		45			
Beecher Falls, Vt	29	1		52			
Newport, Vt	99	60	5	179		3	[d] 2

[a] In bond from France to Mexico.
[b] Zebras.
[c] The figures for El Paso include 16 cattle in transit to Lower California and 1,743 cattle, 2 swine, and 1 horse in transit to Mexico.
[d] Deer.
[e] Comprises 6 deer, 2 camels, 2 zebras, and 2 zebrules.
[f] Including 2 cattle, 3,070 sheep, 145 horses, 295 mules, and 1 jackass, United States animals returned.
[g] Including 131 horses and 482 mules, United States animals returned.
[h] Including 3 United States horses returned.

Number of imported animals inspected, with and without quarantine, during fiscal year ended June 30, 1907—Continued.

NOT QUARANTINED—Continued.

Port of entry.	Cattle.	Sheep.	Swine.	Horses.	Mules and asses.	Goats.	Other animals.
Canadian border ports—Con.							
North Troy, Vt	12	14		12			
Derby Line, Vt	8	1	3	32			
Richford, Vt	7	6	7	188		3	
Alburg, Vt	1			41		1	
Burlington, Vt				1			
St. Albans, Vt	33	26	2	72			
Swanton, Vt		8		38			
Rouses Point, N. Y	15	183		28			
Chateaugay, N. Y	66			31			
Mooers, N. Y	223			72			
Fort Covington, N. Y	20			8			
Malone, N. Y	155	46		15			[a] 1
Ogdensburg, N. Y	42	4	1	82			
Morristown, N. Y	5	856	2	11			
Waddington, N. Y			1	32			
Hogansburg, N. Y	4			6			
Massena, N. Y	2		4	2			
Cape Vincent, N. Y	97			28			
Clayton, N. Y		2	1	1			
Buffalo, N. Y	579	86,554	88	1,058		2	[b] 4
Niagara Falls, N. Y	169	182	42	730	17		
Rochester, N. Y				8			
Port Huron, Mich	151	7,486	58	281	4		[c] 2
Detroit, Mich	904	481	112	595		9	
Sault Ste. Marie, Mich				83			
Total not quarantined	31,595	104,506	638	8,418	996	262	34
Grand total	32,238	105,144	673	8,418	996	266	162

[a] Dog. [b] Elephants. [c] Moose.

TUBERCULIN TEST IN GREAT BRITAIN.

For the convenience of importers of fine breeding cattle the Bureau has continued making tuberculin tests in Great Britain of cattle intended for importation into the United States. The results of these tests during the fiscal year are shown in the following table:

Results of tuberculin tests in England of cattle for importation, fiscal year 1907.

Breed.	Passed.	Rejected.
Jersey	12	1
Aberdeen-Angus	7	
Ayrshire	44	7
Guernsey	56	1
Kerry	4	1
Dutch	39	1
Total	162	11

Two importations, consisting of 15 cattle, were received at the quarantine station for the port of New York without having been tested by the Bureau veterinarian stationed in Great Britain and were therefore tested with tuberculin at the station. Nine of the number were condemned as tuberculous—8 Guernsey and 1 Dutch Belted.

ERADICATION OF VENEREAL DISEASE IN HORSES.

The work of investigation in connection with suspected cases of the disease known as "maladie du coït," or "dourine," has been continued

throughout the year, with Dr. E. T. Davison in the field. Numerous suspected cases have been reported from time to time in different sections of the country by veterinarians and horsemen, but in every instance it has been shown on investigation to have been some other disease simulating maladie du coït in some particulars, and usually proving to be coital exanthema, or some other disease, such as an irregular form of rhinoadenitis or strangles, or a sequela of that affection; or possibly some of the animals were affected with farcy, summer sores, sclerostomiasis, etc. Investigations have been made in various parts of South Dakota, Nebraska, the Indian reservations, Washington, Oregon, Wyoming, Oklahoma, and Montana. A careful inspection has been made of the range horses in the principal range States during this season, several thousand animals having been inspected in such States in the round-up work, with the assistance of veterinary inspectors engaged in other lines of field service, such inspections having been made for the detection of scabies, glanders, and dourine. The general method has been to have the horses in any section of the country that has ever been regarded with suspicion rounded up during the breeding season and examined. In the State of Montana the horses on the Indian reservations have likewise been examined, not because of disease having been reported among the Indians' horses in Montana, but because of the fact that, if there were any disease in the country, the conditions prevailing on the Indian reservations would be likely to furnish an ideal medium for its development and dissemination. Representative herds of range horses have likewise been examined, even when such herds have never been regarded as suspicious. All herds that have ever been regarded with suspicion are still kept under surveillance. Inspectors have been present at the large sales of range horses in Montana, and no horses have been rejected as dourine suspects at the Canadian border.

It seems, from all of the circumstances connected with the investigations that have been made of suspected cases and outbreaks of this disease during the past year and for several preceding years, that a point has at last been reached in this work giving ample foundation for the belief that the disease has been stamped out, and that unless again imported there will be no recurrence of it in this country. The reports of the Bureau veterinarians engaged in this work show 14,720 inspections during the fiscal year, with no case of maladie du coït discovered.

INVESTIGATION OF A DISEASE OF HORSES.

In July and August, 1906, field investigations were made of a disease among horses in Holt County, Nebr., resembling surra in many of its characteristics, and which had repeatedly been reported as such by laymen who had read Bureau Bulletin 42, Emergency Report on Surra, which was issued because this disease had been found to exist in the Philippine Islands. The disease occurring in Nebraska, however, appears to be the same as that reported from portions of Kansas and some other States and commonly known as swamp fever. Cooperative laboratory investigations of this latter disease by the Bureau and the Minnesota Agricultural Experiment

Station are in progress at that station, and are hereinafter referred to in reporting the work of the Pathological Division.

In the course of his field work Doctor Davison was able to reduce greatly the mortality from this affection by a course of treatment which he adopted and as a result of which a number of animals promptly recovered. The same treatment was prescribed and very successfully used in an outbreak of the disease in Kansas. As an antipyretic he gave 40 grains of quinine, 2 drams of acetanilid, and 30 grains of powdered nux vomica four times daily. Cold water sponge baths were given, and in addition frequent copious injections of cold water per rectum, which had a beneficial effect in reducing the temperature and likewise in stimulating peristalsis of the bowels, which, as a result of the disease, show a tendency to become torpid during the fever. He found it better to avoid giving purgatives unless absolutely necessary, on account of their debilitating effect. As a rule the affected animals ate fairly well during the first three or four days of the febrile attack, and if given laxative, easily digestible foods, obstinate constipation calling for the administration of purgatives may be avoided. But not infrequently a dirty, yellowish tinge of the visible mucous membranes has been observed, in which cases 20 grains of calomel in from 2 to 4 drams of aloes in a ball was given, or 2-dram doses of fluid extract of podophyllin seemed to answer equally well. Following the subsidence of the fever a tonic was administered, composed of iron, quinine, nux vomica, and gentian, in combination.

WORK OF THE PATHOLOGICAL DIVISION.

The work of this division, under Dr. John R. Mohler, chief, consists mainly of the scientific investigation of animal diseases. Some of the investigations mentioned in the last report have been concluded and the results have either been published or are at present in the hands of the printer, while others have continued to be the subject of further consideration.

SCIENTIFIC INVESTIGATIONS OF DISEASES.

SWAMP FEVER IN HORSES.

A disease known as swamp fever, which prevailed among the horses of the Red River Valley, in Minnesota, was investigated in cooperation with the Minnesota Experiment Station, and already definite results have been obtained which not only throw new light upon the infection but are highly encouraging with reference to the possibility of obtaining a satisfactory treatment for the disease.

Confining conclusions strictly to the observations drawn from these experiments, the following summary is presented:

(1) Swamp fever is caused by a micro-organism and not by chemical poisons or poisonous plants.

(2) It is transmissible among horses and mules by inoculation.

(3) The virus is present in the blood. It has been demonstrated by inoculation tests to be present in the blood as much as nineteen days before death and twenty-four hours after death.

(4) The disease has been transmitted to a horse by subcutaneous inoculation of 5 c. c. of blood.

(5) The incubation period is approximately from ten to thirty days, at the end of which time the first symptom, a rise in temperature, appears. The disease when uncomplicated follows a chronic course terminating in death.

(6) The disease is characterized by fevers recurring at irregular intervals and by progressive anemia, emaciation, and weakness. The pulse in the later stages is accelerated, though weak, stringy, and sometimes intermittent. The appetite is tremendous, and remains so even after the animal has become very weak. There is a marked wasting of the flanks and hind quarters, causing in the later stages of the disease a dragging and staggering gait of the hind legs.

(7) The most constant and characteristic lesions are found in the circulatory system, mainly in the heart.

Among the important problems which it is hoped that future experiments will solve are the following:

(*a*) The nature of the virus and its isolation.

(*b*) Its distribution in the body, and also whether it is contained in the excreta.

(*c*) Whether the disease can be transmitted by the alimentary tract—that is, by feeding.

(*d*) The natural mode of transmission and infection.

(*e*) The susceptibility of other animals than horses and mules.

(*f*) Methods of prevention and cure.

SURRA.

The past year has again demonstrated very forcibly the great advantages accruing to the country from the supervision which the Bureau of Animal Industry holds over animals brought to our ports of entry from abroad.

An importation of 51 carefully selected cattle from Indian (*Bos indicus*) during the summer season of 1906 brought to the New York port a number of animals that were found by blood examination to be harboring the animal parasite *Trypanosoma evansi*, the specific cause of surra. As serious losses had been experienced in the Philippines and in countries of the East through the infection of both horses and cattle with surra, it was at once determined to use every precaution in safeguarding the cattle and horses of this country from its fatal attacks. Each of the Indian cattle that developed the disease was promptly slaughtered and burned, and the healthy portion of the herd was kept carefully isolated in individual screened stalls of a fly-proof stable until repeated blood examinations had shown that they were free from trypanosomes, and until killing frosts in the late fall had removed all danger of the transportation of virulent blood from animal to animal by means of blood-sucking flies.

From this importation of surra much has been learned of the character of the disease, and of the remarkable periodical development of the living parasites within the blood of the affected animal. Virulent blood drawn from an affected animal and injected into a test rabbit will cause a sharp elevation of temperature after a period usually varying from five to eight days, but occasionally this period extends to ten or eleven days. At the time of the acme of the fever attack if an examination is made of the blood of

the inoculated animal numerous wiggling and squirming organisms will be seen moving about rapidly among the blood corpuscles and manifesting their presence by an active disturbance of all corpuscles with which they come in contact. If the blood is examined daily these moving hematozoa may be found present for two, three, or four days, when they suddenly disappear, while the temperature returns to normal. Now follows a latent or quiescent period lasting for five or six days, during which the temperature of the animal remains at or near the normal point, and the animal eats as usual, only showing the effects of the parasitic invasion by a staring coat and by a slight loss of flesh and energy. At the end of the latent period the same course is repeated, and again an elevation of temperature and a return of the parasites occur, only to disappear more or less suddenly at the termination of the attack. These recurring periods of disease gradually undermine the strength and vitality of the animal until it succumbs.

Post-mortem examination of such an animal shows, first, general emaciation and also that the hair has fallen from around the eyes, mouth, and nose, leaving bare, denuded patches. The external genitals are swollen and edematous and more or less bare of hair. On opening the carcass it will be seen that the skin is firmly adherent to the tissues underneath, that considerable clear fluid has entered the peritoneal cavity, that the abdominal viscera have formed numerous fibrous attachments to the peritoneal walls, and that similar little fibers unite the various visceral organs into a more or less compact mass. The spleen will be found greatly enlarged, even to six or eight times its normal size. The liver and all of the thoracic organs will usually be found unchanged. Variously scattered over the surfaces of the abdominal walls, both internal and external, may be found small collections of the débris of degenerated red blood corpuscles, and the outer surfaces of the digestive organs within the peritoneal cavity may exhibit scattered remains of similar hemorrhages.

The disease produces very similar conditions in horses following natural infection, and may be readily transmitted to ruminants and canines by means of infectious blood. Healthy rabbits were for experimental purposes placed in cages with rabbits that had been infected through injections of virulent blood, but no infection followed, even though they remained in this close contact for thirty days, eating and drinking from the vessels used by the diseased animals.

It will at once be evident that the spread of such a disease as this over the country would quickly lead to great destruction of live stock and to great financial loss. To prevent these losses the best efforts of this Bureau have been exerted and the disease has been rigidly controlled.

GLANDERS.

This disease continues to be prevalent in various parts of the country. Cases have occurred among army horses at Fort Myer, Va., in the quartermaster's stables at Washington, D. C., and in several private stables in the vicinity of this city. In conjunction with local veterinarians 11 cases have been diagnosed and destroyed in this section.

In July, 1906, an enzootic of glanders occurred in Dayton, Ohio, which was investigated by the Bureau at the request of the State veterinarian of Ohio, against whom injunction proceedings had been brought to restrain him from killing horses which responded to the mallein test. A dozen horses reacted to the test, half of which were showing clinical symptoms of the disease. Post-mortem examinations made on a number of the animals killed on account of having reacted to mallein showed leisons of glanders in the lungs and thoracic lymph glands. A number of tubes of potato media were inoculated in Dayton and brought to the laboratory in Washington, where typical cases of glanders in guinea pigs were produced by inoculating the cultures which had developed in the potato tubes.

In February, 1907, a severe outbreak occurred at Ames, Iowa, and the Bureau was called on to confirm the diagnosis. Material from two of the cases was forwarded, both of which were proved by guinea-pig inoculations and cultures to be positive cases.

Some work has been done with the agglutination method as a means of diagnosis, and when the technique of the procedure becomes somewhat more simplified a valuable additional resource will have been obtained for the diagnosis of occult cases of the disease which give an indefinite mallein reaction.

TUBERCULOSIS.

The investigations relative to the immunization of cattle against tuberculosis have been continued throughout the year in conjunction with the Bureau Experiment Station, and the scope of the work has been extended by the application of the immunizing inoculations to an added number of cattle and also to a number of hogs. Some of this work has been done in conjunction with the Georgia Experiment Station, which, in addition to furnishing a number of cattle from the station herd for test inoculations, obtained permission from stock owners in the vicinity to have the experiment extended to some of their young cattle. This work, as formerly, consists in applying the immunizing test in a variety of ways, that the comparative efficiency of the various methods may be determined.

A number of cattle that have reacted to the tuberculin test, thus proving that they are diseased with tuberculosis, have been purchased and are being treated by various methods with living and sterilized cultures of bacilli, for the purpose of perfecting, if possible, some method of treatment which will serve to check the advance of the disease or possibly overcome it completely.

The examination of sediment taken from the cream separators of public creameries for the detection of tubercle bacilli has been continued, and the presence of these micro-organisms has been demonstrated in about 25 per cent of the samples. This continues to brand the public creamery as an important source of tubercular infection for the hogs and calves that are fed upon the separated milk that is returned to the farm from the creamery, and shows the absolute necessity of having State laws compelling creamery companies to sterilize all milk and other products before returning them to the farmer for use as food for live stock.

The tubercular infection of hogs has been deemed a matter of sufficient importance to warrant a continuance of investigations into

the most common means of contracting the disease by these animals. The danger offered to swine by being allowed to run over and feed upon the droppings of tuberculous cattle has been thoroughly tested, also the danger which threatens healthy swine from being brought into contact with feces from tuberculous hogs. The probability of infection being carried from tuberculous brood sows to their litters has been studied, as well as the danger arising from the general herding together of healthy and tuberculous animals.

Owing to the increasing use of tankage from the packing houses as feed for hogs, and owing also to the fact that this substance has been prominently accused of being an important agent in the spread of tuberculosis among these animals, investigations have been carried on with this material with a view to ascertaining the justice of its condemnation as swine feed. The work thus far done fails to show that tankage can be held responsible for originating or spreading tuberculosis among hogs.

The length of time that tubercle bacilli will continue to live and retain their virulence while in butter under usual market conditions is also being made a subject of investigation in cooperation with the Dairy Division. In these investigations butter has been made from milk that has been infected through the addition of bovine tubercle bacilli to the milk just previous to its passage through the cream separator, and another lot has been made from milk obtained from a cow with a tuberculous udder from which tubercle bacilli were being daily excreted in great numbers. These samples of butter have been prepared in both salted and unsalted condition and have been tested upon guinea pigs both by feeding and by inoculation tests immediately after its preparation, again after keeping in cold storage for a period of ten days, and again thirty days afterwards; and it is intended to repeat the tests after three and six months' retention of the butter in a cold storage plant. The ability of these various samples to cause tuberculosis to develop in the guinea pigs upon which they are tested will serve to demonstrate the length of life which may be expected of tubercle bacilli in both salted and unsalted butter when stored under ordinary market conditions for different periods of time.

In the year 1902 thoroughgoing and extensive experiments were begun for the purpose of studying the comparative characters of human, bovine, and avian tubercle bacilli. These investigations have been continued without cessation until the present time, and have led to the production of Bulletin No. 96 of this Bureau, which contains the results of this long series of experiments.

Another line of investigation inaugurated at the same time has been carefully brought to a satisfactory close. This was a study of transformability of tubercle bacilli from one type to another when subjected to unusual conditions of growth, both within animal hosts and upon artificial culture media. The results of these investigations are now in press in the form of an article in the Twenty-third Annual Report of the Bureau of Animal Industry.

TUBERCULIN TESTING OF CATTLE.

During the past year there has been considerable agitation in the District of Columbia with reference to the improvement of its milk

supply. In response to the public feeling which was thus aroused, the Commissioners of the District appointed a committee or conference composed of scientists, physicians, veterinarians, milk producers and dealers, attorneys, and business men to consider methods for obtaining pure and wholesome milk and to advise as to proper legislation to that effect.

An effort is being made by a number of dairymen to produce milk under strict sanitary conditions from cows which are not only apparently healthy but have been proven free from tuberculosis by the application of the tuberculin test.

In order to assist in this work the Secretary of Agriculture, about April 1, directed this Bureau to apply the tuberculin test to the herds of all dairymen who might request such action; consequently the report of this work embraces only the last three months of the fiscal year.

To derive the greatest benefit and permanency from the work, a form of agreement was prepared which must be signed by each dairyman before his application for the test is granted. This agreement provides that all animals which react to the tuberculin test and in addition exhibit clinical symptoms of tuberculosis shall be slaughtered and their carcasses disposed of according to the meat-inspection regulations of the Bureau of Animal Industry, thus placing the disposal of tuberculous carcasses upon a rational and economic basis. Further, all animals which react to the tuberculin test and exhibit no other evidence of tuberculosis may be slaughtered and the carcasses passed for food or condemned, under the conditions named in the first instance, or they must be completely segregated from the healthy portion of the herd and maintained in that condition after the system of Bang. If such animals are producing milk, it is not permissible to use it for any purpose whatsoever without having previously sterilized it. The offspring from these reacting segregated animals must be removed from the parents immediately after birth and fed upon the milk of healthy cows or the sterilized milk of their own parents. These conditions tend to lessen the financial loss to the breeder by enabling him to perpetuate a valuable strain of cattle which he has been creating, and thereby gradually to build up a new herd which will be entirely free from tuberculosis.

In addition to these measures, the agreement provides for the thorough disinfection of contaminated premises and the compliance with all reasonable sanitary measures recommended by the Bureau of Animal Industry or the health department of the District of Columbia. The permanency of the work in suppressing tuberculosis is further assured by a clause which provides that no cattle shall be added to the tested herd unless they have passed the tuberculin test applied by an agent of the Bureau of Animal Industry or of the health department of the District of Columbia.

A system of tagging the ears of all cattle tested is in use. Two varieties of tags are used, stamped in serial numbers, one variety to be attached to the right ears of passed animals and the other to the left ears of the reacting animals.

The work is being carried out in the District of Columbia, Maryland, and Virginia. Already the Pathological Division has tested 28 herds, representing 526 cattle, of which 99 head, or 18.82 per cent,

proved to be tuberculous. In addition to this there are records of 9 herds tested by District of Columbia veterinarians which include 132 cattle, of which 19 head, or 14.39 per cent, proved to be tuberculous. Taking the totals of the amount of testing performed, it appears that in 37 herds, embracing 658 cattle, 118 animals, or 17.93 per cent, proved to be tuberculous. This percentage illustrates the great necessity of the work which is being performed.

The results which are already evident are highly encouraging, as each herd tested acts as a nucleus for the development of an educational center which is of great value to the farmer and dairymen in creating an attitude favorable to the production of milk free from the contamination of disease germs.

It is also worthy of note that the herds belonging to all of the public institutions in the District of Columbia are tuberculin tested and are now free from tuberculosis.

FOWL TUBERCULOSIS.

In the early spring of 1907, by following up a correspondent's inquiry in a poultry journal, the location of another center of avian or fowl tuberculosis in this country was found. This is only the fifth positive demonstration of the disease on the American continent. Thus far fowl tuberculosis has been located in Oregon (by Pernot, 1900), in California (by Moore and Ward, 1903), in Canada (by Higgins, 1905), in New York (by Burnett, 1907), and in the southeastern corner of Michigan in February of this year by the Pathological Division. Other writers have reported the disease, but the failure to make bacteriological demonstration makes the reports useless as scientific evidence. In the cases investigated by this Bureau both dead and live birds were received from Michigan showing generalized abdominal tuberculosis, as attested by microscopic demonstration of the tubercle bacillus and by feeding experiments which resulted successfully in four months.

The importance of continued investigation on this line is shown by the fact that numerous vague diagnoses, under the title of "liver disease," "spotted liver," "going light," "rheumatism," etc., are abroad in poultry circles, some of which in the above-mentioned demonstrations have been proved to be tuberculosis, thus suggesting that chicken tuberculosis is much more extensive in its depredations than hitherto realized. The finding in the feces by all investigators of multitudes of bacilli suggests the ease with which the disease may spread throughout a flock. It must be admitted that in the present state of our knowledge of this disease in mammals and birds the appearance of tuberculosis in a flock of chickens opens up for that locality all the questions connected with the plague.

Canaries are reputed to die frequently with tuberculosis. As a matter of fact, however, among all the notes of post-mortem examinations held on canary birds in this laboratory there is not a single record of a case of tuberculosis. In May, 1906, as previously reported, some dead canaries were received from a fancier in Washington, D. C., which presented a most perfect picture of tuberculous infection. Microscopic examination, however, failed to reveal any acid-fast bacilli, but did bring to light a streptobacillary organism

which after inoculation in pure culture into pigeons and other experiment animals perfectly reproduced the disease that had been killing the canary birds. Further study showed that it was a question of the streptobacillary pseudo-tuberculosis of canaries reported by Nocard, the same as the "tuberculose zoogleique" of Malassez and Vignal. A few months later some new cases were received from another breeder of canaries. The present note is made not merely because of the finding of a new center of infection during the past year, but also on account of the fact that Roger has reported in the Revue Vétérinaire, December 1, 1905, the finding of this disease in a chicken. The occurrence of the pseudo-tuberculosis sporadically among poultry only further demonstrates the necessity for careful bacteriologic examination in all cases of supposed tuberculosis among chickens.

Of further interest as bearing upon the question of tuberculosis was the case of a pigeon brought to the laboratory, suspected of being crop-bound. The tumor mass was a little high for that condition, and upon operation it was found to be a yellow, cheesy tumor, the size of a hickory nut, attached to the cervical vertebræ and incorporating within its mass the esophagus and trachea. Microscopic examination proved it to be tuberculosis. This bird was a 5-weeks-old squab from perfectly healthy parents. The owner and his family are apparently in excellent health, without the slightest suggestion of tuberculosis. However, the owner had just dismissed a colored boy whose general appearance and offensive habit of hawking and spitting about the yards and the pigeon loft had led him to fear tubercular infection. It is to be regretted that examination of the boy could not have followed the finding of the tubercle bacilli in the pigeon.

RABIES.

The Pathological Division has continued to examine all cases of suspected rabies where laboratory assistance was desired. The presence of the so-called Negri bodies in the hippocampus major is at present considered to be the most valuable method of diagnosis. In all cases where they are found and the changes in the plexiform ganglia are also present a diagnosis of rabies is at once reported and rabbit inoculations are not made.

Forty-seven suspected cases were received during the year, of which number 27 (all dogs except 2—a sheep and a cat) were found to have been affected with the disease. Twelve of the positive cases were from the District of Columbia, 6 from Virginia, 5 from Maryland, and 1 each from Maine, Wisconsin, North Carolina, and South Carolina.

In two of the cases, Nos. 725 and 905, we were unable to give a diagnosis by either of the rapid methods of examination. No. 725 was chloroformed early in the disease, which is sufficient to account for the negative microscopic findings. No. 905, on the other hand, died naturally, and is an example of those rare cases where rabbit inoculations are necessary to establish a diagnosis even when the disease has run its course.

Below is a tabulated list of the positive cases:

List of cases of rabies investigated by the Bureau during fiscal year 1907.

Date.	Record No.	Kind of animal.	Received from—	Result of inoculation.	Diagnosis by histological examination.	Diagnosis by presence of Negri bodies.	Persons or animals bitten.
1906.							
Aug. 10	670	Dog	Calais, Me.	Positive	None made	None made	None.
Sept. 3	698	Dog	District of Columbia.	do	Positive	do	2 dogs and 1 horse.
Sept. 12	708	Dog	Clemson College, S. C.	do	None made	Positive	1 child.
Oct. 3	725	Dog	Glenn Dale, Md.	do	Negative	Negative	None.
Oct. 12	735	Dog	Hyattsville, Md.	do	Positive	None made	1 child.
Dec. 21	826	Dog	District of Columbia.	do	do	do	2 children.
Dec. 26	828	Dog	do	do	do	do	2 dogs.
1907.							
Jan. 14	849	Sheep	La Crosse, Wis.	do	None made	do	None.
Jan. 15	850	Dog	Norfolk, Va.	do	Positive	do	9 persons.
Jan. 19	859	Dog	Forest Glen, Md.	do	do	do	1 person.
Jan. 24	865	Dog	District of Columbia.	None made	do	do	
Jan. 26	870	Dog	do	do	do	Positive	1 person.
Feb. 7	889	Dog	Norfolk, Va.	do	do	do	1 woman.
Feb. 21	905	Dog	District of Columbia.	Positive	Negative	Negative	1 person.
Feb. 25	914	Dog	do	None made	Positive	do	
Feb. 28	920	Dog	Norfolk, Va.	Positive	do	Positive	1 woman.
Mar. 15	942	Dog	do	None made	do	do	1 man.
Mar. 21	956	Dog	Wilmington, N.C.	Positive	do	None made	
Mar. 23	965	Dog	Norfolk, Va.	None made	do	Positive	Several persons
Mar. 30	974	Dog	District of Columbia.	do	None made	do	1 dog.
Apr. 4	982	Dog	Norfolk, Va.	do	Positive	do	1 horse.
Apr. 12	994	Dog	College Park, Md.	do	do	do	11 dogs.
Apr. 26	1013	Dog	District of Columbia.	Positive	do	do	1 man.
Do	1016	Dog	do	None made	do	do	
June 5	1076	Dog	Bethesda, Md.	Positive	Positive	do	2 horses, 2 dogs, 1 cow.[a]
June 11	1093	Cat	District of Columbia.	do	do	None made	2 children.
June 10	1094	Dog	do	do	do	do	Several animals.

[a] The cow and both dogs developed rabies between the fourth and sixth weeks following the bite of the rabid dog.

MYCOTIC STOMATITIS.

During the fall of 1906 an official of the Pathological Division was sent to Charleston, Huntington, and Buffalo, W. Va., and vicinity, to investigate a reported outbreak of foot-and-mouth disease. The investigation resulted in finding a very severe and extensive outbreak of mycotic stomatitis. The disease was prevalent throughout the Kanawha and Guyandotte valleys and along the Ohio River in the vicinity of Huntington. The disease assumed a very severe type in some cases and for a short time menaced the milk supply of Huntington and Charleston. Complete recovery resulted in most cases in about one week, while the most severe cases continued for from three to four weeks. The malady was demonstrated not to be inoculable from one animal to another. A former study of this disease is contained in Bureau Circular 51.

AUTOPSIES ON WILD ANIMALS.

A large number of interesting pathological conditions were found in the wild animals furnished by the National Zoological Park. The different species of wild animals which are kept in captivity living under unnatural conditions are more susceptible to the various

diseases than those which live continually in localities and under conditions to which their systems are accustomed. Lack of exercise and changed climatic conditions are especially important factors in making the animals in captivity susceptible to affections of the respiratory and digestive tracts. The results of the autopsies show that the majority of animals succumbed to disorders of this kind. The Pathological Division received for autopsy 126 animals from the National Zoological Park, and the results of the post-mortem examinations are as follows:

Diseases of the digestive apparatus, 36, as follows: Liver, 4 (cirrhosis, 1; fatty degeneration, 2; necrosis, 1); gastro-intestinal tract, 32 (gastritis, 2; chronic gastritis, 1; gastro-enteritis, 4; rupture of the rumen, 1; enteritis, 10; diffuse peritonitis, 1; septic peritonitis, 1; infectious entero-hepatitis, 1; colitis, 1; gangrenous intestines, 1; intussusception, 2; intestinal parasites, 4; hemorrhagic peritonitis, 1; stomatitis, 1; esophagus obstruction, 1).

The gastro-intestinal and respiratory tracts were involved together in two cases (pulmonary congestion and enteritis, 1; pneumonia and enteritis, 1).

Diseases of the respiratory tract, 16 (pneumonia, 6; pleurisy, 1; abscess of lung, 1; asphyxia, 2; pulmonary congestion, 3; parasites of lung—porocephalus, 3).

Diseases of the genito-urinary tract, 12 (parenchymatous nephritis, 7; hemorrhagic nephritis, 1; purulent nephritis, 1; septic metritis, 1; impaction of oviduct, 1; catarrhal salpingitis, 1).

Diseases of the circulatory apparatus, 2 (hypertrophy of the heart, 1; pericarditis, 1).

Diseases of the locomotory apparatus, 1 (arthritis).

Bacterial diseases were specificially demonstrated in the following cases: Tuberculosis, 20; hydrophilosis, 3; proteus bacillosis, 8; *Bacterium aerogenes*, 1; septicemia, 5; *Bacillus enteritidis*, 1; coli bacillosis, 1.

Mycotic diseases were found in 10 cases, all being aspergillosis (fumigatus).

Cases not diagnosed (failure due to decomposition and other unavoidable conditions), 5.

Traumatisms, 3 (fracture of ischium, 1; contusion of brain, 2).

QUAIL DISEASE.

In February and March a large number of dead bobwhites were received at the Pathological Division from different dealers. Post-mortem examination showed in all cases congestion of the lungs, focal necrosis of the liver, and intestinal ulceration. Careful inquiry revealed the fact that quail in the United States were threatened with a virulent epizootic which might lead to as extensive destruction of these birds as had occurred in England and Scotland under the ravages of grouse disease. Centers of infection were located at Alexander City and Dadeville, Tallapoosa County, and Birmingham, Jefferson County, Ala.; Wichita, Kans., and Marlow, Chickasaw Nation, Ind. T. The fact that a virulent *Bacillus coli* was found to be the cause of the disease indicated its close resemblance to grouse disease. Since the pathologic features of British grouse disease, however, are not altogether like those of the disease among American quail, it was deemed well to allow the disease in this country to go by the popular name of quail disease. A Bureau circular (No. 100) was published as a preliminary report, embodying questions to be answered by persons interested in the propagation of this popular game bird. To these questions of the circular have come numerous responses showing that the disease is more widespread than was shown by the original investigation, and demonstrating also that the Bureau was not too early in promulgating whatever facts had come to hand through field investigation and laboratory research.

THE MALTESE GOAT IMPORTATION AND MALTA FEVER.

The remaining Malta goats and their offspring from the importation of September, 1905, have been kept in quarantine during the past year. The climatic conditions of this country do not appear to be favorable to the breeding of these animals, and all of the offspring have been delicate, a large proportion dying from rheumatism, goiter, or pneumonia.

From time to time agglutination tests were made with the blood of the goats, and as late as June, 1907, when the last test was made with the serum from the 16 remaining animals, two positive reactions were obtained. From the results of the investigation of Malta fever by the commission on Mediterranean fever of the Royal Society of London and the measures it has adopted to prevent the spread of the disease in the island of Malta, it was deemed inadvisable to risk using these animals for the purpose for which they were originally imported. The remainder of the herd have therefore been destroyed.

NECROTIC DERMATITIS IN SHEEP.

During the past winter this disease broke out in a number of bands of sheep in Montana and rapidly spread, affecting a great many animals. It was confined principally to the face and head and occasionally the feet. The lesions consisted of patches varying in size from one-fourth to three-fourths of an inch in diameter, devoid of wool, and covered with thick, dry, brown crusts which, when forcibly removed, exposed a granulating base covered with pus. Three live animals affected with the disease were forwarded to the laboratory, from which cases the *Bacillus necrophorus* was isolated.

In March a similar outbreak occurred in a flock of about 150 sheep and lambs at The Plains, Va., which was investigated by the Bureau. The adult animals were affected before they commenced to lamb, and the udders showed lesions of the disease. As the lambs were born they rapidly became infected, the lesions appearing about the head and on the legs as irregular granulations, which projected above the surface and in some cases were pedunculated. There were no lesions in the mouth. Cultures made from these cases also developed *Bacillus necrophorus.*

The disease runs a mild course in the majority of cases, and even in the severest forms it rarely causes death. Treatment with antiseptic washes and ointments usually effects a speedy cure.

MESENTERIC EMPHYSEMA OR INTESTINAL GAS CYSTS IN HOGS.

The study of this quite common affection of hogs was taken up by the Pathological Division during the past year, in order to establish the cause of this peculiar condition. While the affection is not of great importance from an economic standpoint, its occurrence in apparently healthy hogs, and the extensive cystic formations in the intestinal walls and on the mesentery, make this condition of great interest from a pathological standpoint.

Numerous fresh specimens were received from several abattoirs, and various culture media were inoculated. The pathological histology was also carefully studied. A micro-organism similar to the one recently described by Jaeger in this condition and belonging to the coli group was obtained from every case examined and was found

to be the etiological factor of this process. The affection invariably restricts itself to the small intestines and takes its origin in the mucous membranes. The cysts are always found in the course of the lymphatics, and there is a close association between these cysts and the lymph vessels. Histologically the lymphatics, principally, manifest marked changes and the picture is very striking. Masses of giant cells are found frequently obstructing the entire lymph vessel, and again they may form a uniform lining of the gas cysts. Their presence excludes the theory that the affection is of an acute character, and, on the contrary, is indicative of a chronic condition. The experiments are still in progress and attempts to transmit the condition by the introduction of the isolated organisms in various ways have not yet been concluded.

URTICARIA IN HOGS.

Affections of the skin in hogs are very common, and as some of the skin lesions are frequently associated with infectious diseases a thorough knowledge of the various cutaneous affections is of great importance from the standpoint of a differential diagnosis. A very frequent affection of the skin in hogs is urticaria (diamond skin disease, rash, etc.), and as the lesions closely resemble those of swine erysipelas of foreign countries, this condition of the skin was carefully studied as to its etiology and pathology. It was found that urticaria in hogs is merely a localized affection of the skin in which a bacterial invasion plays no part. The cutaneous symptoms may result from various causes; thermic influences on the skin, irritants, certain drugs, and gastro-intestinal disorders may produce the characteristic rash of urticaria. In most of the cases in hogs it is brought on by a gastro-intestinal catarrh with the subsequent action of the absorbed fermenting toxins upon the walls of the blood vessels. The condition may be classified as a mild inflammatory exudative process in which the pathogenesis is identical with that of any other inflammation. It is produced by a direct influence of the cause on the wall of the vessel, and not through the influence of the central nervous system, as has been formerly supposed. An article on this subject is now being prepared for publication.

CORN COCKLE POISONING OF CHICKENS.

The Pathological Division investigated the loss of about 120 chickens by two men who at the suggestion of a friend bought what they supposed to be wheat middlings, with which to make an evening mash for their poultry. Both men secured from a near-by dealer what he offered as a first grade of middlings, but which proved to be only low-grade screenings heavily loaded with corn cockle (*Agrostemma githago*). The most important lesion was that of a severe corrosive action upon the whole gastro-intestinal tract, particularly the crop. Intestinal hemorrhages were quite marked in several of the cases. Many a farmer would be inclined to doubt a diagnosis of poisoning from cockle in such cases, claiming that he had fed lots of cockle with his wheat to his chickens. In fact, that would be the very use to which he would be likely to put wheat that had become badly infested with cockle. It is, indeed, true that the poisoning of chickens by cockle seed fed with wheat is rarely, if ever, heard of. But

when the grain has been ground there is then exposed the tissue of the seed which contains the sapotoxin, the poisonous material which has in numerous instances proved so fatal to poultry, and even to larger animals.

FOWL CHOLERA.

Another important chicken disease definitely located during the past year was fowl cholera. It is true that almost every raiser of chickens reports serious outbreaks of chicken cholera, and in many instances also reports the cure of his sick birds by some home remedy or some change in feeding. But it is also true that in none of these cases is the diagnosis based on anything more than the presence of a fatal diarrhea. The small number of birds lost, the cure of the sick birds, and the method of cure all testify to the incorrectness of this diagnosis. When true fowl cholera (hemorrhagic septicemia) is once introduced into a flock it is sure to decimate that flock unless speedily recognized and promptly treated by thoroughgoing disinfection.

In April, 1907, the Pathological Division received the viscera of some dead fowls from a poultryman in Clay County, Ill. He reported hens going to the nest apparently well and falling over dead in the morning. From the tissues was recovered *Bacterium avisepticum*, the causative agent of hemorrhagic septicemia in fowls. This fulminant form of the disease has been reported but two or three times in America, although it is possible that true fowl cholera, a subacute form of hemorrhagic septicemia, due to a less virulent variant of the causative organism, is more or less common.

In view of the fact that the fowl cholera organism is closely related to, if not identical with, the bacterium of swine plague, the following case is particularly interesting: In response to a request from a farmer for aid in the diagnosis of a disease which was taking off his poultry this Division made an examination of two dead chickens forwarded from Centerville, Miss. The special lesions noted were enlarged and congested liver studded with petechial hemorrhages and enlarged spleen greatly congested. From the organs were isolated motile organisms which by tinctorial and cultural tests, confirmed by pathogenicity, were proved to be virulent members of the hog-cholera group of bacilli. The finding of the hog-cholera bacillus in the latter case is an addition to the records of last year, when this Division reported the finding of *Bacillus enteritidis* in a duck and two pigeons.

HEMORRHAGIC SEPTICEMIA OF PIGEONS.

A disease identical with fowl cholera is that known as hemorrhagic septicemia of pigeons. There was brought to the laboratory for examination the last of a loft of 35 pigeons, all of which had died with similar symptoms following the introduction of a few birds bought in the market. Bacteriological examination showed the presence in the blood and all the organs of a minute, nonmotile, polar-stained organism which was proved by further investigation to be a member of the swine-plague group of bacteria and resembled closely the organism reported by Leclainche as the cause of hemorrhagic septicemia in wild pigeons. Inoculation of pure cultures demonstrated its intense virulence. This is the first time that this disease has been reported in this country among pigeons. The fact that it

was introduced by the purchase of a few birds in the market emphasizes the great danger, so often pointed out, of introducing new stock without several days of quarantine.

DISTRIBUTION OF BLACKLEG VACCINE.

During the year ending June 30, 1907, there were made in the Pathological Division for free distribution about 1,250,000 doses of blackleg vaccine, consisting of 67 separate makings.

This vaccine is used for the purpose of conferring immunity on young cattle against the disease known as symptomatic anthrax, or, more popularly, blackleg. The manufacture of this vaccine continues to be an important feature of the routine work of the laboratory, the vaccine being in great demand by stock owners in infected districts. The process of manufacture of this product has been greatly improved during the past year.

The results of vaccinations for the year ending June 30, 1906, as reported to the Bureau by the stock raisers who have used the vaccine, are as follows:

Results obtained from vaccine distributed during the fiscal year ended June 30, 1906.

State or Territory.	Number of reports.	Number of cattle vaccinated.	Deaths, same season, previous to vaccination.		Died after vaccination.					
			Number.	Per cent.	Within 48 hours.	From 2 to 7 days after.	Within 1 year.	Total number.	Per cent of deaths after vaccination.	Number of cases due to mistakes.
Arkansas	14	870	18	2.06	.....	3	.....	3	0.34	.....
Arizona	45	4,060	176	4.33	2	9	5	16	.39	3
California	403	60,021	559	.93	5	33	190	228	.38	1
Colorado	469	60,494	947	1.53	29	69	180	278	.45	.....
Georgia	1	13	6	46.15	.....	.....	.....	.....	.....	.....
Idaho	29	2,818	39	1.38	2	1	1	4	.14	.....
Illinois	93	3,738	103	2.75	4	1	14	19	.50	.....
Indiana	8	376	9	2.39	.....	3	1	4	1.07	.....
Indian Territory	24	1,907	53	2.77	.....	1	6	7	.36	.....
Iowa	161	7,768	130	1.67	3	7	43	53	.68	.....
Kansas	444	38,400	524	1.36	12	40	108	160	.....	5
Kentucky	4	174	3	1.72	.....	.....	.....	.....	.....	.....
Louisiana	1	30	.....	.....	.....	.....	.....	.....	.....	.....
Michigan	2	18	.....	.....	.....	.....	.....	.....	.....	.....
Minnesota	17	674	21	3.11	1	.....	.....	1	.15	.....
Mississippi	1	70	7	10.00	.....	.....	2	2	2.85	.....
Missouri	381	13,821	202	1.46	9	19	42	70	.50	.....
Montana	263	33,584	337	1.00	8	27	45	80	.23	3
Nebraska	1,335	103,537	1,920	1.85	44	172	306	522	.50	27
New York	12	304	12	3.94	.....	1	1	2	.65	.....
North Carolina	54	2,318	80	3.43	3	2	5	10	.43	.....
Nevada	7	2,184	30	1.37	.....	1	7	8	.36	.....
New Hampshire	1	12	.....	.....	.....	.....	.....	.....	.....	.....
New Mexico	42	9,494	331	3.48	2	22	11	35	.36	14
North Dakota	355	36,791	568	1.54	12	30	100	142	.38	.....
Ohio	2	36	.....	.....	.....	.....	.....	.....	.....	.....
Oklahoma	41	5,427	82	1.51	1	8	16	25	.46	1
Pennsylvania	1	8	1	12.50	.....	.....	.....	.....	.....	.....
Oregon	61	12,723	105	.82	1	4	9	14	.11	6
South Dakota	401	39,147	565	1.44	25	64	177	266	.67	3
Tennessee	51	1,952	48	2.45	.....	2	13	15	.76	1
Texas	770	171,143	2,364	1.38	24	167	1,035	1,226	.71	35
Utah	14	2,291	18	.78	.....	2	1	3	.13	.....
Vermont	5	86	1	1.16	.....	.....	.....	.....	.....	.....
Virginia	296	9,070	228	2.51	4	14	36	54	.59	.....
Washington	40	1,367	62	4.60	1	.....	15	16	1.17	.....
West Virginia	104	2,695	60	2.22	1	7	16	24	.89	.....
Wisconsin	7	411	2	.48	.....	.....	.....	.....	.....	.....
Wyoming	334	64,846	664	1.02	20	85	164	269	.41	3
Total	6,292	691,557	10,276	1.485	203	794	2,549	3,546	.514	102

An examination of the foregoing table shows, when compared with the records of previous years, a slight decrease in the percentage of animals dying without being vaccinated, also in the number of animals dying subsequent to vaccination. It therefore appears justifiable to reiterate a former statement that blackleg is becoming much less of a menace to the raising of young cattle than it was some years ago, when the mortality without vaccination amounted to over 10 per cent in certain sections. It is evident that the vaccine in a few years has not only saved many animals to the breeder, but has gone far toward a goal that was suggested early in the period of free vaccine distribution, i. e., the eradication of blackleg from the pastures of the country.

WORK OF THE BIOCHEMIC DIVISION.

This division, of which Dr. M. Dorset is chief, has been engaged during the year chiefly in the laboratory inspection of meat products, investigations concerning hog cholera, and tests of stock dips, besides continuing the preparation and distribution of tuberculin and mallein.

LABORATORY MEAT INSPECTION.

In addition to the lines of work previously carried on, this division has taken up the laboratory inspection of meats and meat food products under the provisions of the act of Congress of June 30, 1906. This work involves the inspection of prepared meats and meat food products manufactured in establishments at which inspection is conducted by the Bureau of Animal Industry, and requires the examination of all substances entering into the composition of these products, including salt, pickles, spices, edible fats and oils, etc., in addition to the examination of the meats themselves, to determine their bacteriological and chemical condition. For carrying out this work laboratories were established in New York, Chicago, Cincinnati, Kansas City, Omaha, and San Francisco. All of these laboratories, with the exception of the one located in New York City, were equipped and ready for work prior to October 1, 1906. About March 1, 1907, the laboratory located in Cincinnati was transferred to East St. Louis, Ill.

These laboratories, working in connection with the Washington central laboratory, inspected samples of all meat food products which were prepared prior to October 1, 1906, and which, under the regulations of the Department, required a laboratory inspection before they could be shipped interstate. This inspection resulted in the refusal of the Department to permit shipment in interstate commerce of more than 100 different varieties of meat food products which were found to be in conflict with the regulations and which had previously been allowed shipment in interstate commerce without restriction. In addition to this inspection of stocks on hand prior to October 1, a regular inspection of the products prepared in various establishments granted inspection or exemption was taken up on that date, and several thousand samples have since been examined. These examinations show that as a general rule the packing houses have been complying with the regulations with regard to preservatives and coloring matters and also with regard to proper labeling.

In connection with the meat-inspection work, an ink has been devised for the marking of inspected carcasses which appears to give satisfactory results when properly applied. If experience shows that this ink is as satisfactory as results so far indicate, its use will effect a great saving in the cost of marking inspected carcasses.

INVESTIGATIONS CONCERNING SOURING AND OTHER CHANGES IN MEATS.

Experiments are under way concerning the cause of souring of meat and the changes which may take place in canned meat food products. This work involves experiments with hams taken from hogs exhibiting various diseased conditions, or other conditions, such as overheating, which are believed to affect the curing of meats, and also includes bacteriological examinations of sweet and sour hams and ham pickles. Along with these experiments concerning sour meats investigations are being carried out with regard to the bacteriological condition of normal canned meats and of canned meats which have undergone various changes.

HOG CHOLERA EXPERIMENTS.

The experiments concerning the etiology of hog cholera, which were described in the previous annual report, have been continued, but not as extensively as in previous years. So far as they have gone, however, they confirm in all particulars the findings which were briefly described in last year's report.

PREVENTION OF HOG CHOLERA BY VACCINATION.

The method of immunizing hogs from hog cholera, concerning which preliminary reports were submitted last year, has been tested much more extensively than heretofore, and the following facts have been demonstrated:

(1) When hogs immune from hog cholera are injected with suitable amounts of virulent blood taken from hogs sick of the disease the blood of the immunes acquires the power to protect nonimmune hogs from an otherwise fatal dose of disease-producing blood administered simultaneously with the serum.

(2) Immunes which have never exhibited symptoms of disease after exposure to hog cholera may furnish equally as potent serum as those which have recovered from an attack of the disease.

(3) Hyperimmunization may be accomplished as well by administering one large dose of disease-producing blood to an immune as by repeated injections of smaller doses.

(4) Hyperimmunization may be accomplished with blood from any virulent strain of hog cholera.

(5) Hyperimmunized hogs probably retain for several months the power to furnish a potent serum.

(6) Serum from properly hyperimmunized hogs in doses of 15 c. c. should protect nonimmunes weighing from 25 to 50 pounds from a fatal dose of disease-producing blood administered simultaneously with the serum.

(7) Immunity in hogs treated by what is termed the serum-simultaneous method (No. 6) lasts at least three and one-half months and probably longer.

(8) In serum-simultaneous vaccination it is not necessary to produce illness in the vaccinated hog in order to secure an immunity lasting for at least three months.

(9) If a sufficient dose of serum is given, hogs are not injured by the serum-simultaneous vaccination.

(10) Hogs vaccinated by the serum-simultaneous method do not communicate disease to others unless they themselves become sick.

(11) Serum administered alone can not be expected to furnish protection for a longer period than three weeks.

(12) The serum probably can not be used successfully as a curative agent unless administered within four days after actual infection has taken place.

In order that this method, which has proven so successful in an experimental way, may be given a practical test, efforts will be made to secure the cooperation of experiment stations in testing serum which the Department will furnish them. If arrangements for these tests can be made it is hoped that the practicability of this method for combating hog cholera may be determined within a short time.

PREVENTION OF HOG CHOLERA BY SELECTIVE BREEDING.

This work has been continued and another generation of hogs from immune parents has been exposed to hog cholera. The results were not decisive, and the work will be continued along the lines described in the preceding report.

BACTERIOLYTIC POWER OF BLOOD SERUM FROM HOGS.

Experiments designed to determine the effect of the blood serum of hogs upon various bacteria which at times attack these animals have been carried out. These experiments are of a very technical nature and are of interest on account of the light they throw upon the defensive mechanism of the animal body in its fight against infectious diseases. Bulletin 95, by Dr. B. M. Bolton, describing the results of these experiments, was issued during the year. The details of this work, on account of their technical nature, need not be gone into in this report.

PREPARATION AND DISTRIBUTION OF TUBERCULIN.

Experiments having for their object the development of a practical method of standardizing tuberculin have been begun, but sufficient progress has not been made to warrant a statement as to the results which may be expected from them.

Requests for tuberculin from official veterinarians and health officers throughout the country for the diagnosis of tuberculosis in cattle continue to increase. The total amount of tuberculin prepared and shipped to such officers and to Bureau employees during the past fiscal year amounted to 129,050 doses, an increase of 24 per cent over the amount distributed during the previous fiscal year.

PREPARATION AND DISTRIBUTION OF MALLEIN.

During the fiscal year the demand for mallein for the diagnosis of glanders in horses was greatly in excess of that during the previous

fiscal year, 41,012 doses having been furnished to health officers and to the War Department.

The quantity supplied to the War Department amounted to 25,507 doses, this being used in part to test all of the horses belonging to that Department and in part for the purpose of determining the immunization and curative value of mallein.

Recent experiments have been planned looking to the immunization of horses from glanders by artificial inoculation, but these experiments have not progressed sufficiently to warrant a report upon them.

STOCK DIPS.

As a result of the laboratory experiments conducted in the Biochemic Division and of the field tests conducted by that division in collaboration with the Zoological Division and the South Dakota Agricultural Experiment Station, permission has been granted by the Secretary of Agriculture for the use of cresol dips and coal-tar creosote dips in the official dipping of sheep for scabies, thus making available four classes of dips which may be used in the official dipping of sheep, the other two, previously sanctioned, being the lime-and-sulphur and tobacco-and-sulphur dips. Since the issuance of the order of the Secretary permitting the use of cresol dips and coal-tar creosote dips a large number of proprietary substances belonging to these classes, as well as others belonging to the classes of lime-and-sulphur and tobacco-and-sulphur dips, have been submitted to the Bureau for the purpose of determining the strength in which they may be used for official dipping, and as a result of these laboratory examinations permission has been granted for the use in official dipping of the preparations which were found to conform to the prescribed standard.

The Biochemic Division has also examined samples of crude petroleum to determine their fitness for dipping cattle for scabies and for ticks, and has conducted some further experiments in regard to methods of emulsifying these dips.

DISINFECTION AND DISINFECTANTS.

The experiments which were intended to determine the relative value of liquor cresolis compositus (U. S. P.) and carbolic acid as disinfectants have been completed, and they show that the former has a distinctly greater germicidal value than carbolic acid. The results of these experiments are contained in Bureau Bulletin 100, by Dr. C. N. McBryde. Experiments with other coal-tar products are being carried on in a similar manner.

DIGESTION EXPERIMENTS WITH POULTRY.

The analytical work in connection with the second series of digestion experiments with poultry has been completed and a bulletin describing these experiments has been prepared for publication. These experiments have a practical bearing upon chicken feeding.

EXAMINATION OF WATER SUPPLIES OF DAIRY FARMS.

Complete bacteriological and chemical analyses, together with a sanitary survey of the surroundings, of the water supplies of ap-

proximately 400 dairies located in Virginia, Maryland, and the District of Columbia have been recently completed, but the results have not as yet been brought together in such shape that it is possible to report at this time upon the conditions found.

WORK OF THE DIVISION OF ZOOLOGY.

This division, under Mr. B. H. Ransom as chief, has continued and extended its work of investigating animal diseases of parasitic origin, collecting and determining animal parasites, and preparing publications relating to these subjects.

ROUNDWORMS IN SHEEP.

The first series of field experiments in connection with a study of the life history of the roundworms of sheep with the view of determining, if possible, methods of preventing infection has been completed. From these experiments the following conclusions may be drawn:

Lambs from infested ewes will remain free from hook worms (*Monodontus trigoncephalus*) if separated from their mothers soon after birth, and afterwards allowed with them in a clean pen only during short periods for sucking, the manure being removed from this pen each time it is used, and if the lambs when weaned are placed by themselves on noninfested pasture.

Infection with twisted stomach worms (*Hæmonchus contortus*) may be almost entirely avoided by this method.

Lambs raised by this method will rarely altogether escape infection with nodular worms (*Œsophagostomum columbianum*); usually they will escape with a light infection, and in a few instances they may become rather heavily infested.

The "bare-lot" method of Dalrymple (raising lambs and ewes together in a perfectly bare lot and feeding and watering from raised racks and troughs) does not protect lambs from a rather heavy infection with stomach worms.

In some cases infection with hook worms may not occur in lambs raised by the "bare-lot" method.

With the "bare-lot" method some lambs may escape infection with nodular worms, but in most cases a slight infection will occur, and occasionally a rather heavy infection may take place.

Sheep infested with stomach worms, hook worms, and nodular worms, if kept on a clean board floor and supplied with clean fodder and water (the chances of reinfection thus being reduced to a minimum), will still be more or less infested with these parasites after a lapse of nearly twenty months, indicating that individuals of these parasites may live in the body at least this length of time. No increase in the number of individuals of the parasites occurs in the body when sheep are kept under these conditions; on the other hand the number decreases, showing that the eggs of the parasites will not develop to maturity inside the body, but must first pass to the outer world before reinfection is possible.

Pastures on which infested sheep have grazed will not become free from infection with twisted stomach worms after remaining empty from October 25 to June 16, climatic conditions being those of Washington, D. C., in the years 1906 and 1907.

Pastures on which infested sheep have grazed will be free from infection with hook worms and nodular worms after remaining empty from October 25 to June 16, climatic conditions being those of Washington, D. C., in the years 1906 and 1907.

A second series of field experiments undertaken this year (1907) has been a failure on account of the death while quite young of nearly all the lambs which were to be used.

The laboratory experiments bearing on the life history of the twisted stomach worm have been continued, and although this work has been much interrupted some new data of importance in addition to those published in Circular 93 have been obtained. A circular (No. 102) containing information as to the treatment and prevention of stomach-worm disease in sheep has been issued.

Experiments with *Strongyloides longus*, a rather common intestinal roundworm of sheep, closely related to the parasite found in cases of Cochin China diarrhea in man, have shown that rabbits may be infected with this parasite either by feeding them with embryos which have developed to the proper stage in cultures of feces from infested sheep, or by placing cultures containing the embryos on the skin. These facts indicate that sheep also may become infected with the parasite in question either through the swallowing of embryos or by their penetration through the skin.

A circular describing three new genera and several new species of strongyloid nematodes found in sheep and other ruminants has been prepared and is nearly ready for publication. This circular will be of value in assisting investigators to properly differentiate species which have heretofore been greatly confused.

GID IN SHEEP.

An investigation of the distribution of the gid parasite in the State of Montana has been continued, and up to the present time the fact of its presence in Teton, Chouteau, Valley, Fergus, Broadwater, and Cascade counties has been definitely established, and considerable losses among sheep from this cause have been reported. These counties cover a large part of the State, showing that the disease is widely prevalent in Montana, and the indications are that it has even a wider distribution than has been definitely determined.

Experiments for the purpose of determining certain facts in the life history of the parasite are in progress, sheep affected with the parasite having been obtained and shipped to the laboratory for this purpose. A careful morphological study of the adult and larval stages of the parasite has been begun in order to fix more definitely the points of difference between the gid tapeworm and other closely related tapeworms of dogs, the latter of which are in no way connected with the gid parasite, but are likely to be mistaken for it. In this connection a comparison is being made between specimens of gid parasites of American and European origin in order to determine whether the two are of the same or of different species.

"PALISADE-WORM" DISEASE OF HORSES.

A preliminary investigation of this disease, which has been attributed to the palisade worm (a parasitic nematode, certain stages

of which occur in the arteries in the neighborhood of the celiac axis, producing aneurisms), has been made. From the data gathered it is not possible to state whether or not the parasite in question stands in a causal relation to the disease which is associated with it. A large number of horses are annually lost from this disease in Wyoming and neighboring States, and the matter is sufficiently important to warrant an extensive investigation.

TREATMENT OF SHEEP SCAB.

Two series of experiments in the treatment of sheep scab, with special reference to the use of coal-tar dips, carried on under cooperation between the Biochemic and Zoological divisions, have been completed. As a result of these experiments the use of coal-tar dips under certain restrictions is now permitted in the dipping of sheep entering interstate commerce. This work is reported more at length in connection with the work of the Biochemic Division.

INVESTIGATIONS BEARING ON TICK ERADICATION.

A series of investigations with the object of improving, if possible, methods now in use in tick eradication, and determining other methods which may prove useful, has been undertaken at Auburn, Ala., with the cooperation of the Alabama Agricultural Experiment Station and the live-stock sanitary board.

COLLECTION OF PARASITES.

At the laboratory post-mortem examinations with reference to the presence of parasites have been made of 136 animals. Of these 70 were wild animals, mostly from the National Zoological Park, and the remainder were domestic animals. Seven of the latter were free from parasitic infection, and in the 59 found to be infested parasites occurred as follows: Cestodes in 9, nematodes in 58, protozoa in 14, trematodes in 1. Twenty-five of the wild animals were free from parasites, and parasites occurred in the remaining 45, as follows: Cestodes in 15, nematodes in 38, protozoa in 3, trematodes in 13, arthropods in 5.

In addition to the specimens from the animals examined at the laboratory a considerable number sent in for identification and others obtained by exchange with various investigators at home and abroad have been added to the collection. The total number of entries in the catalogue of the helminthological collection is now 4,794.

INDEX-CATALOGUE OF MEDICAL AND VETERINARY ZOOLOGY.

Work on this publication has been continued, four parts having been issued and two more sent to the printer during the fiscal year. Nineteen parts, comprising 1,492 pages, have been prepared so far, bringing the work down through the M authors.

WORK OF THE BUREAU EXPERIMENT STATION.

During the past year the work at the Bureau Experiment Station, as in former years, has consisted of both independent original investigations and investigations in cooperation with the other scientific divisions of the Bureau, relating to animal diseases and breeding. The station is located at Bethesda, Md., and is in charge of Dr. E. C. Schroeder, superintendent.

TUBERCULOSIS.

Two bulletins on tuberculosis were published in the course of the year, Nos. 93 and 99, based on observation and experiments made at the station. In these special attention was called to the danger of infection through the ingestion of contaminated food rather than through the respiration of air in which dust containing tubercle bacilli is suspended. It was shown that the location of tuberculous lesions in the body is quite independent of the point at which the infectious material enters, and that the frequency with which tuberculosis occurs as a lung disease does not justify the conclusion that the lung is infected directly through the air. The frequency with which the disease localizes itself in the lung was traced to the following facts: That tubercle bacilli may pass through the uninjured wall of the intestine after they have been swallowed and then into the lymph channels; that they are carried along the lymph channels and are passed into the blood through the great lymph ducts that communicate with the venous circulation, and that the blood after it has received the lymph stream is filtered through the exceedingly fine capillary network of the lungs before it is distributed to other portions of the body.

The work of the year demonstrated that the commonest mode for the discharge of tubercle bacilli from the bodies of tuberculous cows is with their feces; that about 40 per cent of the tuberculous cows that show no symptoms of disease are expelling and scattering tubercle bacilli, and that tubercle bacilli passed with the feces of tuberculous cows are actively pathogenic.

It was shown that when tubercle bacilli are present in milk they will be present in both the skim milk and the cream obtained from the milk, irrespective of the manner in which the cream arises—slowly and naturally by standing or rapidly through a rotary or centrifugal process. Butter made from infected milk was shown to be infectious for guinea pigs, and it was shown that tubercle bacilli in ordinary salted butter persist forty-nine days with undiminished virulence.

When it is borne in mind how frequently milk contains cow feces, and that the percentage of dairy cows known to be tuberculous is very large, the facts presented seem to warrant the conclusion that tuberculous cows are responsible in a great measure for the prevalence of tuberculosis in the human family.

The investigations to explain the increase of tuberculosis observed in recent years among hogs, which were begun last year, are still in progress. It was shown that the simple exposure of hogs to the manure from a stable containing tuberculous cows is sufficient to infect them in comparatively short time. The Pathological Division is making further investigations at the Experiment Station relative

to the danger of tuberculosis among pigs when infected sows are used as brood animals. Additional work during the year with the application of the tuberculin test to hogs has given results confirmatory of the conclusions published last year in Bureau Bulletin 88.

Through the use of a cow with a tuberculous udder it was found that calves taking milk from such cows contract tuberculosis with great rapidity. One calf that took the milk of the cow for several months was affected with generalized tuberculosis at the age of 5 months, and four calves, of which three sucked the milk from the cow's udder, respectively one, three, and seven days, and one which was fed the milk from a pail thirty days, also contracted tuberculosis.

In cooperation with the Pathological Division a series of special experiments with tuberculosis are being conducted, among which the more important are tests of various methods of immunization, the curative treatment of tuberculosis, and a study of the relative virulence of tubercle germs derived from different portions of the body of a tuberculous animal. In connection with the latter it is interesting to know that tuberculosis was induced in the bodies of guinea pigs by the inoculation of the feces from a tuberculous cow; that pure cultures were obtained in the Pathological Division from such guinea pigs, and that cows have been injected with the pure cultures. Some of the cows injected have the appearance of animals affected with a fairly rapid form of tuberculosis.

RABIES.

Among the several cases of rabies brought to the notice of the station in the course of the year were two of special interest, as they occurred in other animals than dogs. In the fall of 1906 a small, quiet mare was placed in quarantine because she had been bitten by a rabid dog. Fourteen days after her confinement in a large, well-ventilated box stall she showed symptoms of the disease and died after suffering terrible agony. Rabbits inoculated from the mare also became rabid.

In the spring two horses and a cow owned by neighboring farmers were placed in quarantine, because they had been bitten by a rabid dog. The horses have not shown symptoms of disease, but are still in confinement. The cow became rabid on the twenty-second day after she was bitten and was killed to end her agony, with the consent of her owner, after he had convinced himself that she was truly "mad." About a week before she became rabid she produced a calf, which she failed to recognize during her paroxysms of fury and attacked viciously. The history of the dog that bit the two horses and the cow illustrates the great damage a rabid dog may do and the large territory he may cover after he has become affected, the farms where he bit the horses and the cow being located 9 or 10 miles from the premises from which the dog escaped. This dog is also known to have bitten four other dogs, which were at once killed by their owners.

OTHER INVESTIGATIONS OF DISEASES.

Investigations relative to infectious abortion, sheep scab, internal parasites of sheep, Texas fever, etc., are in progress in cooperation with the Bureau laboratories in the city. A test made of the infec-

tious character of ticks grown on East India cattle has so far given negative results. The test of cattle ticks grown on sheep and other animals has progressed very slowly because material for the work has been difficult to obtain.

It was found from the examination of young turkeys raised near the station that the destructive disease known as blackhead exists in that locality, and the disease was also found in turkeys shipped to the Washington market from Virginia. From what can be learned it now prevails in most of the Eastern States and many outbreaks have occurred in the Western States. The rapidity with which it kills young turkeys was shown by the death of 26 out of 28 turkeys hatched at the station last spring. The two remaining birds are in poor condition and will either die or fail to reach a profitable maturity if they live. This disease is of great economic importance, and further investigations are projected.

THE TUBERCULIN TEST.

A number of cows owned by persons residing near the station were tested with tuberculin in the course of the year. The total number of tuberculin tests made at the station each year is quite large, and includes both hogs and cattle. The results obtained with the tests are exceptionally reliable, as shown by post-mortem examinations which are sooner or later made in the majority of cases.

Tests of commercial tuberculin have shown that some of this material found on the market is impotent and worthless. Some of the samples tested, which had the proper color and the general appearance of tuberculin, failed to cause a reaction in several cows that reacted strongly less than forty-eight hours later upon injection with tuberculin prepared in the Bureau laboratories. It is easy to understand that persons who have had unsatisfactory experience with unreliable tuberculin may have formed erroneous ideas as to the diagnostic value of the tuberculin test, but this, of course, does not affect the reliability of real tuberculin properly prepared. These tests will be continued, and when impotent products are found the results will be published.

OTHER WORK OF THE EXPERIMENT STATION.

Special investigations in animal breeding and feeding, in cooperation with the Animal Husbandry Office, are in progress at the Experiment Station. This work is discussed in connection with the work of the Animal Husbandry Office.

During the year the usual number of small experiment animals for the use of the station and the Bureau laboratories were raised, quite a number of local (mostly sporadic) outbreaks of disease were investigated, and all the station land not actually occupied by buildings, experiment pens, etc., was kept under cultivation to obtain green forage for the animals.

WORK OF THE ANIMAL HUSBANDRY OFFICE.

The work of this office, in charge of Mr. George M. Rommel, Animal Husbandman, consists principally of investigations concerning the breeding and feeding of farm animals and poultry.

HORSE BREEDING.

COLORADO WORK.

The work in the breeding of American carriage horses, in cooperation with the Colorado Experiment Station, is progressing satisfactorily. During the fiscal year 11 foals were dropped, 2 males and 9 females. The stallion Carmon served 15 mares owned by private individuals. No additional horses were purchased. One 2-year-old colt died of strangles or distemper.

VERMONT WORK.

The Morgan horse-breeding work of the Bureau has received a great impetus through the generosity of Mr. Joseph Battell, of Middlebury, Vt. Mr. Battell is known for his devotion to the Morgan horse and has from the first been greatly interested in the Bureau's work. Feeling that the importance of the work demanded more land than had been available, Mr. Battell offered to give the Department 280 acres of land within 2 miles of the village of Middlebury. The offer was accepted, and work was begun on the farm April 16, 1907. The land lies very well, the soil is good, and the location is excellent for a horse farm. Since his first gift, Mr. Battell has added 120 acres, making 400 in all. All the horses in the Vermont experiment have been transferred to the new farm at Middlebury, which has been named the Morgan Horse Farm. Although the main work is being done at the new farm, the project is still being carried on in cooperation with the Vermont Experiment Station.

No purchases of horses were made during the year, but arrangements were made to buy a stallion as soon as funds became available, which was done on July 1. The stallion, General Gates, is a particularly valuable acquisition. He was bred by Mr. Battell, and was sired by Denning Allen out of Sallie Scott, by a Thoroughbred. General Gates was selected on account of his individuality and his performance as a sire. He sired the champion Morgan stallion at the Louisiana Purchase Exposition and has made a great impression on the horse stock of central Vermont. Two of the fillies purchased in 1906 were sired by him. At the time General Gates was bought a yearling filly by him out of Ellen (one of the mares purchased in 1906) was also acquired.

On June 30, 1906, there were in the Vermont stud nine brood mares, one 2-year-old filly, two yearling fillies, six weanling fillies, and one weanling colt. During the spring four mares were bred to General Gates, two to Lambert, and one each to Battle Ax, Morgan, Falcon, and Rob Roy. One 2-year-old filly died August 8, 1906, from supposed heart failure, and one twin was lost June 9, 1907.

CLASSIFICATION FOR AMERICAN CARRIAGE HORSES.

Since the inauguration of the work of the Bureau of Animal Industry for the development from American material of a carriage

horse which would breed true to type, it has been evident that one of the earliest supplementary steps to give the movement wide scope and a broad foundation would be the establishment of classes for such horses at the State and National fairs. This sentiment has grown rapidly during the past year and has found expression in the addition of such classes to the premium lists of fairs in Iowa and Kentucky, States from which large numbers of American carriage horses are marketed. On their own initiative the Iowa State Fair, held at Des Moines, the Kentucky State Fair, held at Louisville, and the Blue Grass Fair, held at Lexington, Ky., have offered prizes for American carriage horses for the season of 1907.

The classifications adopted by these fairs are similar, but considerable differences exist which it is desirable to harmonize. A uniform, systematic, and practical classification, suitable for the guidance of fairs in general, is a possibility and will tend to bring about uniform exhibitions. If the horses shown under these conditions are capably judged, a uniform type can be fixed definitely and rapidly.

It seems fortunate that such a uniform classification has been made possible by a cooperative arrangement between the Bureau and the American Association of Trotting Horse Breeders. The classification was worked out by the committee on heavy harness horses of the association and was finally approved and distributed late in May, 1907. The committee is organized to represent the Department of Agriculture, the American Trotting Register Association, the American Saddle Horse Breeders' Association, and the American Morgan Register Association. Mr. George M. Rommel, the Animal Husbandman of the Bureau, is chairman of the committee, the other members being Mr. Joseph Battell, Middlebury, Vt., registrar of the American Morgan Register Association; Gen. John B. Castleman, Louisville, Ky., president of the American Saddle Horse Breeders' Association; Mr. A. T. Cole, of Wheaton, Ill., a prominent breeder of Morgan horses of carriage type; Prof. Charles F. Curtiss, director of the Iowa Agricultural Experiment Station, Ames, Iowa, and a member of the horse purchasing board of this Department, and Mr. H. K. Devereux, of Cleveland, Ohio, secretary of the American Association of Trotting Horse Breeders.

As soon as the classification was approved it was sent out to the horse press and to managers of fairs. It has had a most cordial reception. The press has quite generally approved the plan, and the interest of fairs has been very gratifying. Two fairs (the Interstate Fair held at Kansas City and the Kansas State Fair held at Hutchinson) have accepted the classification, and several others whose premiums lists of 1907 were closed have signified a desire to take up the matter in time for the season of 1908. This start should be followed by its adoption generally, and wherever possible this should be done for the 1907 fairs.

The adoption of the classification by State fairs is especially urged for the reasons that they are in the closest touch with farmers, that the farmers are the breeders of most of the carriage horses sold on the American markets, and that the value of the American horse for carriage purposes is rarely appreciated by the farmers who breed them. Hundreds of horses sold annually by farmers at really insignificant prices are after some months of finishing and handling again sold as carriage horses at prices up into the thousands. Further-

more, there is a continual sale of stallions to supply this trade. These horses are usually of only moderate value as speed producers, but are of excellent carriage type. If kept entire and properly mated they could be of inestimable value as foundation sires of the American carriage horse, but as a rule they are castrated and lost so far as breeding value is concerned. If the powerful educational influence of the fairs and stock shows is thrown into the solution of the carriage-horse problem the farmer will not only be educated to appreciate the intrinsic value of the native light horse for carriage purposes, but will recognize the worth of the stallion with good conformation and quality but only moderate speed as a sire of carriage horses, and the problem of fixing the type will be one of early solution.

When a fair adopts the carriage-horse classification it should take all possible steps to insure a creditable exhibition of animals. By direct correspondence and by press and official notices farmers who own suitable horses should be urged to exhibit.

The classification has been published as Circular 113 of this Bureau.

SHEEP BREEDING.

One of the most important problems confronting stock breeders of the United States at present is the development of a breed of sheep suitable to range conditions. In spite of the great development and prosperity of the sheep industry of the West, breeding methods are not systematic, and most breeders are continually crossing, the result being a lack of uniformity in the stock and to a certain extent a failure to attain as high a standard as might otherwise be possible. The requirement of the range is a breed of sheep that will yield a profitable clip of wool, produce good mutton lambs, and that will stand flocking in large numbers. It is believed possible to combine these characteristics in one breed of sheep, and with this idea in mind an experiment was begun in the fall of 1906 in cooperation with the Wyoming Experiment Station. Fifty-nine ewes have been purchased in the northwestern range country and 30 in Nebraska for foundation stock. All were purebred or high-grade Rambouillet except four, which were grade Delaines, and nearly all were yearlings and 2-year-olds. During the breeding season of 1906 rams were leased for breeding. In June, 1907, four purebred Rambouillet rams were purchased.

BREEDING MILKING SHORTHORNS.

Experiments in breeding milking Shorthorn cattle were begun in cooperation with the Minnesota Experiment Station and represent the first attempt the Bureau has made at cooperative breeding with a number of farmers. During the year steps were successfully taken to bring about the desired cooperation. Nine Minnesota breeders, most of them within easy touch of the station, have agreed to allow their herds to be used and to manage them according to the instructions of the Department and the station. These, with the station herd, will make 10 herds in all under observation.

POULTRY BREEDING.

The work in poultry breeding in cooperation with the Maine Experiment Station continues in a satisfactory manner. Three lines of investigation are being followed:

(1) To increase egg production. This work has been underway at the station for nine years, during three of which the Bureau has cooperated. At the start the better-laying hens were selected by their yearly records in trap nests and mated with the sons of heavy layers. The work has been continuous with each succeeding generation. This year 1,000 hens are kept for testing and breeding, and sufficient males to mate with them. Two thousand chicks are being raised from which to select next season's stock.

(2) Investigations regarding the yields and welfare of hens kept for egg production when kept in medium-sized and large flocks under similar conditions. Four flocks of 50 hens each are being compared with two flocks of 100 hens each. The floor allotment to each bird in all of the flocks is 4.8 square feet.

(3) Comparisons of the yields and the health of laying hens when kept in large and very large flocks in rooms of the same size. Four rooms each having 480 feet of floor space and alike in arrangement are used. One hundred hens are kept in each of the first two rooms, giving 4.8 square feet of floor to each bird. In each of the other rooms 150 hens are kept, the floor allotment there being 3.2 square feet. This is the third year during which the sizes of flocks and floor allotments have been investigated.

A careful description of the methods in use at the Maine Station was published as Bulletin 90 of the Bureau series.

OTHER BREEDING INVESTIGATIONS.

The animal-breeding experiments recently started at the Bureau Experiment Station are progressing favorably. Studies are being made of the effects of very close inbreeding of guinea pigs and domesticated rats. Experiments have been started with wild and domesticated rats to determine some of the laws of inheritance in breeding hybrids. Crossbreeding experiments are being made with sheep for the same purpose. Heredity of rats and guinea pigs is under observation, and selective breeding is also being carried on.

The question of telegony is receiving attention, and observations are made of the progeny of females that have previously produced hybrids. Although there are no experimental data to confirm the assertion that telegony plays a part in breeding, it is generally considered important by a great many breeders.

About 500 small animals are used in the breeding experiments at present, and careful records and descriptions are kept of each individual. Owing to the short time the experiments have been underway, no definite results can yet be stated.

FEEDING INVESTIGATIONS.

ANIMAL NUTRITION.

The experiments in animal nutrition in cooperation with the Pennsylvania Experiment Station during the fiscal year have consisted in a continuance of the investigation concerning the influence of age and individuality upon the metabolism of cattle, which was

begun in the fall of 1904. Two steers have been used as the subjects of this investigation—one a purebred Aberdeen-Angus and the other of mixed breeding in which Jersey blood apparently predominated. The animals were purchased in 1904 as yearlings, and since that time have been fed identical feeds in amounts varying with the weight and capacity of the animals, while a complete record has been kept of the feed consumed and of the growth made. The record has included, in addition to the weights, monthly measurements of the animals and a systematic series of photographs every three months. At intervals of about three months also the digestibility of the feed has been determined and likewise the nitrogen balance, the results of the latter serving to indicate the rate at which lean meat was being produced by the animals. Furthermore, experiments have been made each winter with the respiration calorimeter to determine both the maintenance and the production values of the feeds used for each animal. In this way it is hoped to detect the influence, if any, of the advancing age of the animals and of their individuality, and to determine whether either of those factors affects the actual physiological processes involved in the utilization of the feed.

In the course of the year, in addition to the records of feed and growth above mentioned, eight experiments have been made with the respiration calorimeter, together with a number of check tests to control the accuracy of the apparatus. This special work has required the taking of about 200 samples of feed and excreta, calling for a total of about 1,100 determinations in the chemical laboratory, some of which require special skill and experience. More than 1,000 weighings of animals, feed, and excreta were required, most of which must be accurate to within one-quarter of an ounce. The actual records of the calorimeter experiments required some 55,000 entries, exclusive of those relating to the samples and weights above mentioned. Naturally, such an amount of material necessitates a large amount of careful computation before the results can be deduced. This series of experiments has been concluded with this season's work, and the results are being prepared for publication. A bulletin upon the energy value of red-clover hay is now in press.

At the beginning of the new fiscal year, July 1, 1907, the work in animal nutrition was very materially enlarged by the addition of cooperative experiments in feeding beef cattle with the Missouri Experiment Station, this work having been carried on prior to that date by cooperation between the station and the Bureau of Plant Industry of this Department. The station is feeding a large number of steers to compare the results of feeding 2-year-olds and calves, and exhaustive investigations are planned on the feeding of steers from birth to maturity, chemical studies of the carcasses to be made from time to time. Representatives of different lots and ages will be sent to the Pennsylvania station with supplies of the same feed as they received at the Missouri station, and these steers will be placed in the respiration calorimeter for studies of their metabolism and of the energy values of the feed used.

FEEDING COTTON-SEED PRODUCTS TO HOGS.

A comprehensive study of the value of fermented cotton-seed meal for hogs is now under way, and it is proposed to undertake during the coming fiscal year experiments in feeding cotton-seed meal to hogs

on alfalfa pasture. Varying amounts will be fed to determine the quantity which may be fed safely while hogs are on pasture.

POULTRY FEEDING.

Investigations with poultry were begun in the fall of 1906 at the quarantine station of the Bureau at Halethorp, Md. A three-pen poultry house was constructed of a size sufficient to accommodate 75 hens. On December 1, 75 White Plymoth Rock pullets were divided into three equal lots and fed by the moist mash, dry mash, and hopper methods of feeding. The mixtures used were the same in all three pens, the difference being that the fowls in pen 1 received their mash moist, those in pen 2 received their mash dry, and those in pen 3 received both mash and grain mixtures from self-feeding hoppers. Records of production and of the general health and thrift of the hens in the various pens have been kept. During the spring chicks have been hatched from these hens and about 450 are now being raised. A careful record has been kept so that the pullets from the various pens can be identified, and this will be used during the coming year to repeat the experiment. It is planned to repeat it with several successive generations in order to determine the influence, if any, of the method of feeding upon vitality.

A new poultry equipment is in process of construction at the Bureau Experiment Station at Bethesda, Md. This site is far more favorable and convenient than that at Halethorp. The laying house now being built at Bethesda is 16 by 80 feet, divided into five pens, each 16 feet square, and has a small feed house attached. The house is so planned that more pens can be added as needed. A double-yard system for each pen is planned in connection with the laying house. The remainder of the tract devoted to poultry, about 5 acres in all, will be suitably fenced, so as to provide inclosures and range for the young stock. In addition to the laying house, five colony houses are to be built. It will also be necessary to construct a suitable incubator cellar.

BEEF PRODUCTION IN THE SOUTH.

The work in cooperation with Mr. Kernachan in the Tennessee Valley (northern Alabama), referred to in the previous report, has been continued during the year. The object of these experiments is to show what can be done under farming conditions in the way of improving the native cattle for beef purposes by using purebred bulls with grade cows and by proper feeding. There were 86 grade Aberdeen-Angus cattle under investigation at the close of the year.

The work in direct cooperation with the Alabama Experiment Station concerning the feeding of beef cattle comprised a feeding experiment during the winter of 1906–7, a repetition of those conducted during the two preceding winters. As usual, the steers were sold on the New Orleans market. The results of the three winters' work are being prepared for publication.

SUPERVISION OF PEDIGREE RECORD ASSOCIATIONS.

Under the new system of supervising pedigree record associations less friction appears to have been experienced in the importation of animals for breeding purposes than ever before. The secretaries

of such associations in the United States have cheerfully complied with the new regulations. One of the surest indications of the practicability of these regulations is the fact that, although they have been in force for one year, it has not been found necessary to make any changes in their terms. Some difficulty has been experienced in getting secretaries to use the exact form of entry certificates prescribed by the Treasury Department, but this is being rapidly and satisfactorily adjusted.

WORK OF THE DAIRY DIVISION.

The force of the Dairy Division, under Mr. Ed. H. Webster, chief, engaged in various lines of educational and research work, has been materially increased during the year. A gradual change in the form of organization as regards administrative duties has been in progress, the work being grouped in four main branches. All work pertaining to the production of milk has been classed as Dairy Farming Investigations. All that relating to the manufacture of dairy products, such as butter, cheese, etc., is placed under the general heading of Dairy Products Investigations. Everything pertaining to the organization and management of manufacturing and distributing mediums, such as creameries, cheese factories, market milk service, etc., has been put under the general heading of Organization and Management Investigations. The duties imposed by law in the inspection of renovated butter factories form the fourth branch, designated as Renovated Butter Inspection.

DAIRY FARMING INVESTIGATIONS.

SOUTHERN DAIRYING.

A special appropriation of $20,000 made by Congress for the purpose of further developing the dairy industry of the Southern States has been used in educational work among the farmers of that section. Assistance has been rendered in the remodeling of old barns and the building of new ones, the construction of silos, the selection and breeding of herds, the keeping of records of feeds and of the products of the dairy herds, by the investigation of local market conditions and the sources of the supplies that are brought into the South from outside territory, and by attending farmers' institutes and agricultural meetings. Mr. B. H. Rawl has charge of this work. Nine men have been engaged in it in North Carolina, South Carolina, Georgia, Tennessee, Mississippi, Louisiana, and Texas.

This work has met with uniform favor throughout the South. No attempt has been made to reorganize the entire working system of anyone's farm, but the policy has been to call the attention of the farmer to one particular thing in which he might improve conditions and to get him to do this one thing. This has nearly always resulted in gaining the attention of the farmer, and in nearly every case he has become convinced that it is to his interest to follow the suggestion made. After he has adopted the suggestion as to one important part of his dairy work, other things are pointed out as fast as it is thought he will be likely to undertake additional improved methods. It was early observed that different men must be approached in different

ways and that the work must be fitted to the needs of each individual. With some farmers stress has been laid upon keeping records of herds, with others upon the securing of good bulls for the herds, with others upon the securing of markets for their products, and to still others assistance has been given in planning and erecting new buildings or in laying out a crop system that will supply the needs of the herds.

In the course of this work 10 barns and 23 silos were erected during the fiscal year, and 3 barns and 18 silos were in process of construction at the end of the year. The average cost of the completed silos, per ton capacity, was as follows: Modified Wisconsin style, $1.29; stave, $1.36; concrete, $3.63; metal lath and cement, $2.46. Of the last two classes there have been built but one each, both of which are small, hence the cost shown is perhaps too high for average-sized silos.

Many farmers have been induced to keep records of their herds, so as to show the cost of feed and the amount realized from the products both before and while carrying out the suggestions made for improved methods. Such records have been kept for 70 herds, including 1,606 cows. The results from 16 herds, containing 314 cows, have been compiled for illustration and show an average increase of $3.75 in the monthly production of each cow for an average period of five and a half months. This is a striking example of the practical results to be obtained by the adoption of better dairy methods in the South.

So encouraging have been the results of the Department's work that similar work is being taken up by some of the States. The North Carolina department of agriculture has adopted the same system of field work and is planning to place two men in the field for work similar to that being done by the Dairy Division. The Tennessee and Georgia authorities are so favorably impressed with the work that it is only a question of securing the funds when both States will take it up. Louisiana has furnished an assistant to supplement the work of the member of the Dairy Division working in that State. It is believed that after this special educational work has been well started the Department should withdraw and the States should continue it, and the effort has been made to impress the persons conducting the State work with this idea. It is hoped that the interest created in the various States visited by the representatives of the Dairy Division will encourage others to engage in the work; in fact, this has already been accomplished in many sections. Entire harmony and hearty cooperation exist between the officers of the State experiment stations and the workers of the Dairy Division in every State in which the work is being carried on.

A special effort has been made to encourage the agricultural colleges in these States to extend their work in dairying by giving short courses particularly adapted to the needs of the farm dairyman. Under this encouragement the Mississippi college last winter offered its first short course in dairying. In other States a portion of the time of the Dairy Division men in the field was given in assisting and teaching in the short dairy courses that were offered.

As a result of the work of the Dairy Division the cities of Atlanta, Ga., and Memphis, Tenn., have adopted the score-card system and are rapidly improving their milk supplies.

DAIRY RECORDS AND TESTS.

During the past year an effort has been made to establish a uniform system of keeping advanced registry records among the different breeding associations. This movement was started by the National Association of Dairy Instructors and Investigators at their meeting at Urbana, Ill., in July, 1906, and a committee was appointed to take the matter under advisement and to confer with the various breeding organizations. It was suggested that in addition to securing uniformity in keeping advanced registry records some system of national registration be adopted for certifying animals eligible to such register. The subject has been presented to the different associations at their annual meetings during the year, and the associations have each appointed a member of a committee to confer with the committee from the organization above named and a delegate from the Dairy Division to consider unification of this important line of work and the establishment of a national dairy register of merit.

It is expected, through this branch of the Dairy Division work, to give encouragement also in the formation of test associations for the purpose of keeping records of dairy cows, and also to encourage, wherever possible, the better keeping of general records for dairy farms. It is expected to issue publications from time to time on these subjects. One publication much sought for is Records of Dairy Cows, by Mr. C. B. Lane, assistant chief of the division, and it is intended to supplement this by publishing additional records from year to year.

It is believed that some systematic work should be undertaken by the Dairy Division to encourage farmers to make tests and keep records of their dairy herds. There is no question that if such a plan were generally adopted the income of the dairy farmers of the country could be largely increased. The average individual farmer can not or will not take up this matter; hence the need for some organized effort in the way of education and demonstration. It is believed that a moderate expenditure for work of this kind would yield large economic results.

DAIRY PRODUCTS INVESTIGATIONS.

This branch, which is in charge of Mr. C. E. Gray, includes work relating to butter, cheese, and milk.

BUTTER.

FISHY FLAVOR.—The investigations to determine the cause of fishy flavor of butter have been continued. While these studies have not reached a stage that will warrant the publication of results, many things have been learned as to the cause of fishy flavor, and it is thought altogether likely that the work in this direction can be brought to a successful conclusion during the coming year. The development of this fishy flavor in butter continues to cause dealers the loss of many thousands of dollars each year, and the cause has been a mystery.

EFFECT OF ACIDITY ON KEEPING QUALITY.—Experiments have also been made concerning the amount of acidity in cream and its effect upon the keeping quality of the butter. In the past it has been the

opinion of those most prominent in the teaching of butter making that butter made from cream ripened to a high degree of acidity would be the best for storage purposes. There is no question that the advocates of "high ripening," as it is called, have met with much success in using this method as compared with the method of no ripening, or ripening without any control whatever, so far as the butter maker is concerned. There were, however, those who advocated a milder acidity, claiming that this was conducive to a better keeping quality, and some work has been done in Minnesota and Canada to demonstrate that this kind of ripening gave the best results. To throw further light on the question the Dairy Division undertook extensive experiments in making butter from cream having various degrees of acid development and in storing the butter at different temperatures to test its keeping qualities. Several thousand pounds of butter were made under given conditions and placed in storage.

Chemical analyses and bacteriological examinations were made of the cream before it was churned and of the butter immediately after churning. The cream was divided into two lots, one being pasteurized and the remainder left unpasteurized. These lots were subdivided into smaller lots. One portion was churned without the development of any acidity whatever; another, to which a good starter was added, was immediately churned; to the third portion the starter was added and the cream was allowed to ripen to a normal degree of acidity, while the fourth portion was the same as the third, except that the cream was allowed to ripen to a very high degree of acidity.

These lots of butter were stored at temperatures of 32° and 10° F. above and 10° F. below zero. The Dairy Division had under its control storage rooms in Chicago admirably adapted to work of this kind, where temperatures were carried at a very uniform level throughout the year. The butter was examined at intervals of a few months. It was found that the pasteurized cream, churned sweet without starter, produced remarkably fine butter that kept without deterioration for weeks after it was taken out of storage. This was at such marked variance with the popular idea of high ripening that it has been deemed best not to publish the results in detail until another year's work can be carried out, in order to have a complete check upon the experiments already made. If the findings of the past year prove to be repeated in the coming year's work, there seems likely to be almost a complete revolution in the methods of making butter from sweet cream. Aside from doing away with the trouble of making the starters and ripening the cream, it will materially shorten the hours of labor of the butter maker and make it possible for the creamery work to be carried on during regular working hours. Under the present system the creamery man has to begin his work at 3 or 4 o'clock in the morning, winter and summer, and rarely ever finishes before 3 or 4 o'clock in the afternoon.

A NEW MOISTURE TEST.—One of the greatest needs of the butter maker has been an accurate and rapid method of determining the amount of moisture in butter. During the year Mr. Gray has worked out an extremely simple and rapid method of determining moisture in butter and other products, and a description of this method has

been published as Bureau Circular 100. It is understood that already this simple apparatus has been procured and is being used with entire success by many hundreds of butter makers. Under the present-day methods of business the butter maker must know absolutely what he is doing at every stage of his work, and before this rapid means of determining the moisture in butter was made available he was unable under practical conditions to determine whether he was exceeding the maximum amount of moisture allowed by law or was reducing the moisture to an unduly low point and thus materially cutting into the profits of the business. With this simple method, which is known as "Gray's moisture test," there is no longer any reason for such a condition of affairs in any creamery in the country.

Application for United States patent on this apparatus and method has been filed under the act of Congress of March 3, 1883, so that the method may be used by the Government of the United States, or any of its officers or employees in the prosecution of work for the United States, or by any person in the United States, without the payment of royalty.

BUTTER LABORATORIES AT ALBERT LEA, MINN.—During the spring of 1907 laboratories for butter investigations were established at Albert Lea, Minn., in cooperation with the Minnesota Experiment Station. Arrangements have been made with the Albert Lea Dairy Association whereby the Dairy Division gets the benefit of its supply of milk—about 25,000 pounds a day—for experimental purposes in the manufacture of butter. Bacteriological and chemical laboratories have been built and equipped on the creamery grounds. This arrangement is expected to be of great assistance in furthering the butter investigations of the division.

CHEESE.

The cheese investigations consist of three general lines—soft cheese investigations at Storrs, Conn.; Cheddar cheese investigations at Madison, Wis., and Swiss cheese investigations at Albert Lea, Minn.

SOFT CHEESE INVESTIGATIONS.—In these investigations, conducted in cooperation with the Storrs Experiment Station, progress has been made during the year in working out the methods of manufacture of Camembert cheese, and a bulletin (No. 98) giving directions for making this type of cheese has been published. The work on Camembert has been practically completed, and at the present time the main effort is being directed toward the problems involved in the manufacture of Roquefort cheese. Much remains to be done in connection with the latter, particularly in securing the right texture in the product.

CHEDDAR CHEESE INVESTIGATIONS.—This work is being carried on in cooperation with the Wisconsin Experiment Station. The main problem under consideration is the use of acids of various kinds in the manufacture, rather than the developing of lactic acid in the milk. There are some features in connection with this substitution of acid which, if they prove successful, will bring about a great saving to the manufacturers of the Cheddar type of cheese, both

in time and in the losses sustained under the ordinary methods of manufacture.

SWISS CHEESE INVESTIGATIONS.—Investigations concerning the Swiss type of cheese have been begun at Albert Lea, Minn. In connection with the laboratory plant used for butter investigations, there has been constructed a curing room for this kind of cheese. Space has been secured in the creamery plant for the manufacture of the cheese, and milk is purchased from the Albert Lea Dairy Association for this purpose.

The fundamental problems involved in the manufacture of Swiss cheese are but little understood; the whole process seems to be one of "rule of thumb" rather than any scientific method. Makers of the Swiss type of cheese in this country, as well as in Europe, follow the plan which has been in vogue for a great many years in Switzerland and Germany in the manufacture of cheese. This method is open to many objections, as it is almost impossible to get a uniform product with any degree of certainty, and the losses sustained in the making through the loss of butter fat in the whey are very heavy. The physical and biochemic processes of ripening have not been studied to any considerable extent in this country or abroad. This is a large and important field of investigation, as the manufacture of the Swiss type of cheese is next in importance to that of the Cheddar type in this country.

MILK SECRETION.

One of the most interesting problems in dairying and one that is fundamental to all else is the secretion of milk and the various changes that milk is subject to because of different conditions of breed, feed, lactation period, climate, health of the cow, etc., and there is very little literature that throws light on the questions involved.

At the beginning of the year arrangements were made with the Missouri Experiment Station to take up a thorough and prolonged study of this subject. From the nature of the problems and of the investigations proposed it is expected that a long period of time will be required to complete the work.

It seemed desirable to give special consideration to the changes that come about by the advances in the period of lactation, consequently it was decided to select a number of cows of the different breeds and make a careful and systematic study of the milk of each cow from the beginning to the end of her milking period. Sixteen cows have been selected for this preliminary test. It will be necessary to repeat the test another year in order to guard against irregularity and to give a complete check on the work, as there are no complete previous experiments available for comparison.

Among other things studied will be the color of the milk. While the cows are being fed on identically the same feed during the entire period of lactation, there are some differences in color of the milk, probably due to breed and milking period, and these will be studied throughout the period. As soon as certain fixed characteristics, such as breed of the animal and advance in lactation period, have been determined it is expected to take up different feeding stuffs and determine the effect of each on the chemical and physical constituents of the milk.

OTHER MILK INVESTIGATIONS.

Plans have been made for taking up during the coming year an extended study of pasteurization and other processes which may affect milk from a bacteriological and chemical standpoint, with special reference to the preparation of milk for market purposes. This is an important subject which has hitherto received but little attention from the Dairy Division.

ORGANIZATION AND MANAGEMENT OF DAIRY ENTERPRISES.

Investigations on this subject are divided into two general sections, one, relating to market milk, under the supervision of Mr. C. B. Lane, assistant chief of the Dairy Division, and the other, dealing with creameries, cheese factories, etc., under the supervision of Mr. B. D. White. The work is almost entirely educational, the object being to put into actual practice the experience and facts obtained from the research investigations. The method of procedure is to carry on an educational campaign by correspondence, securing reports from all kinds of dairy concerns, attending dairy meetings of various kinds, and giving such assistance as may be possible in the general development of the dairy interests of the country.

MARKET MILK SERVICE.

MILK SUPPLY OF WASHINGTON, D. C.—One of the main features of the work during the year has been the investigation of the milk supply of Washington, D. C. Nine hundred and eighteen dairies, with 16,446 cows, were inspected and rated according to a score card prepared by the Dairy Division, 100 points representing a perfect score. Of these dairies 526 were located in Maryland, 294 in Virginia, and 66 in the District of Columbia. With a few exceptions the conditions found were not at all satisfactory, the average of all the scores being only 45.03. The scores covered such items as condition of cows, tuberculin test, sanitation and arrangement of stables and milk houses, health and cleanliness of milkers, and handling and cooling of milk. There were found to be 74 establishments where milk was handled in the city, and the average rating of these was 72.58. One hundred and forty-four bacteriological examinations were made of milk, taken at random from wagons on the streets of the city during hours of delivery.

MILK SUPPLY OF OTHER CITIES.—Aside from the work which has been done in and around the city of Washington, there have been many calls from outside cities, mainly from boards of health, for assistance in improving their milk supplies. Assistance was rendered to the following cities during the fiscal year: Hollister, Los Angeles, Oakland, Pasadena, Redlands, Riverside, San Bernardino, San Diego, San Francisco, San Jose, Santa Barbara, Santa Cruz, Stockton, and Vallejo, Cal.; Boulder, Colo.; Hartford, Conn.; Atlanta, Ga.; Boston and Brockton, Mass.; Montclair, N. J.; Cortland, Glens Falls, and Syracuse, N. Y.; Cleveland, Ohio; Memphis, Tenn., and Richmond, Va. The usual method of procedure in such cases has been to have the board of health call a general meeting of the dairymen and consumers, together with the physicians of the city, for

a complete and comprehensive discussion of the milk situation in the city. Special meetings are called for the physicians, and often for the city council, for the purpose of taking up in detail special features that these bodies would be interested in from legislative and administrative standpoints. The use of the score card is discussed, and the inspector who goes from the Dairy Division gives such information as may be needed. It is required that these cities make reports from time to time of the progress made. Calls for assistance of this character are coming faster than they can be filled with the number of men available for this work. With an adequate force this feature of the work of the Dairy Division could be greatly extended with undoubted benefit to the public.

MILK AND CREAM CONTESTS.—In February, 1906, there was held at Chicago, under the auspices of the Dairy Division, as a part of the national dairy show, a competitive exhibition of milk and cream, with the object of promoting better conditions for handling milk and cream for home consumption. This was the beginning of a work that has been extended during the fiscal year 1907, similar contests having been held in New Hampshire, Massachusetts, Connecticut, Pennsylvania, Illinois, and Missouri. These events have been productive of much good in the improvement of the milk supply. Perhaps the most successful of these contests was the one held at Cleveland, Ohio, in March, 1907. The subject was taken up jointly by the chamber of commerce and the city health department. A large number of samples of milk and cream were exhibited and scored, dairy farms were inspected and scored, prizes were awarded, meetings were held, and addresses made. The interest of dairy farmers and milk producers, as well as physicians and sanitarians, was enlisted, and the result was a general awakening for better milk in the city, to the benefit of both producer and consumer. A report of this meeting has been prepared for publication.

MODERN DAIRY AT JAMESTOWN EXPOSITION.—The Dairy Division installed and is conducting at the Jamestown Exposition what is termed a modern dairy plant. It is located in the food building and consists of two parts, one of which shows the necessary equipment and methods for a small dairy farm, bottling milk for market purposes, and the other the methods and necessary machinery for handling a large city and milk business, with pasteurizing apparatus, bottling machine, etc. Literature relating to market milk is kept on hand for distribution, and stereopticon lectures are given on different phases of the market milk service.

CREAMERY INVESTIGATIONS.

A thorough study is being made by the Dairy Division of different plans of organization of dairy enterprises, with special reference to cooperative work, and assistance is given wherever practicable in the organization of cooperative and other dairy concerns.

The division has solicited reports from the various creameries of the country with a view to giving them assistance in their business methods, methods of manufacture, and keeping of records. At the close of the year about 500 or 600 creameries were reporting monthly to the division, each giving a statement of the amount of milk and

cream received from the creamery patrons, the amount of butter sold, the overrun obtained, the expense of operating the business, etc. A careful analysis of these reports shows that there is a heavy loss to many creameries and to the farmers supplying them because of lax methods of manufacture and the absence of system in keeping records.

The creameries settle with the farmers supplying the cream on the basis of the butter fat contained in the cream. The quantity of butter produced naturally exceeds the amount of butter fat in the cream, the excess being caused by water, casein, salt, etc., which are incorporated with the butter. This excess is termed "overrun," and normally amounts to 18½ per cent. If a creamery does not show an overrun to this extent it may be assumed that there is some waste in manufacture or some laxity in keeping records, the result in either case being a loss to the business.

Reports for the year 1906 and the first months of 1907 from several hundred creameries in Minnesota, Iowa, and Wisconsin show that in 63 per cent of the creameries the overrun fell below 18½ per cent. In Wisconsin the percentage of reporting creameries coming below this mark was 68, and the average overrun was but 15.7 per cent. In Minnesota 63 per cent of the creameries reporting failed to reach the normal overrun, the average being 16.66 per cent. For Iowa the percentages were 57 and 16.46, respectively. Applying these percentages to all the creameries in the States named, the total loss sustained by reason of the low overrun is calculated as exceeding $2,000,000 annually, and the loss for the entire country is estimated at more than $5,000,000 a year. The reports also show that, as might naturally be expected, the creameries making an overrun of 18½ per cent or more yield better returns to the persons supplying the cream than are paid by the creameries with low overruns.

As the monthly reports are received, letters are immediately written by the Dairy Division to the creameries whose reports show low overruns or indicate defective work of any other kind. In these letters the defects are pointed out and suggestions are made for remedying them. This has already resulted in a material betterment of the conditions in many creameries.

The Dairy Division maintains offices in New York and Chicago, with a butter expert at each place whose special duty it is to inspect the butter received at those markets and give helpful suggestions to butter makers and creamery managers. Large quantities of butter deficient in quality are found on these markets. The trouble may be due to poor cream or milk or to poor workmanship, and because of such defects the butter may not bring good prices. Butter may leave the creamery in apparently good condition and yet be unsatisfactory after it arrives at its destination a week or two later. When requested by the shipper the experts of the Dairy Division examine a shipment on its arrival at market and send to him promptly a reliable report as to its condition and quality. If the butter is not satisfactory they state what the defects are and make suggestions for overcoming the trouble. These reports are not in the nature of fault-finding criticism, but are intended to help the butter maker to produce a better product and obtain a better price. Facilities are provided for a limited number of chemical analyses of butter found on these markets. The plan is for the inspectors to spend three weeks of each

month in the city and the remainder of the month in visiting creameries that seem to be having most trouble with their product. In Chicago up to July 1, 1907, the butter from 525 different creameries was inspected and 1,394 letters were written to butter makers and creamery managers telling them of the faults in their butter and making suggestions for improvement. The New York inspector likewise examined the product of several hundred creameries.

As this work has progressed, more and more of the creameries have taken an interest in it and have availed themselves of this service, and the commission men have also found that it is to their advantage to have a disinterested expert examine the butter and send a report to the creamery. Many commission men have stated that the services of the inspectors have resulted in much good in a general improvement of the quality of the butter received on the market.

A system of score cards for indicating the sanitary condition of creameries and the ability of the creamery men to conform to the standard regulations has been worked out by the Dairy Division and adopted by a number of the State dairy and food commissions. The division furnishes blank forms for these reports to the inspectors in the States where the system has been adopted. These forms are made out in quadruplicate, one copy being given to the creamery, one sent to the State dairy and food commissioner, one to the Dairy Division, and one retained by the inspector. Reports show that the system is working very satisfactorily and that it results in much improvement in conditions.

THE CREAMERY SITUATION.

A special investigation has been made of economic and commercial conditions in the creamery business and information has been secured showing that there is practically a monopoly of this industry in some sections, while in others the business is largely conducted on a cooperative basis or there is fair competition, the result being that under the latter conditions the farmers are receiving from 6 to 8 cents a pound more for their butter fat than in territory controlled by the monopoly. This difference is due partly to the methods of the so-called "centralizers" and partly to the inferior quality of the butter produced by those concerns because the cream is collected over a wide territory and much of it is received in a stale condition.

That a very large percentage of the butter found in the market is below grade, selling for less than market prices for fine butter, and that the farmers in a very large area of butter-producing territory receive much less than a fair price for their product are both matters of record. That the losses from these sources amount to millions of dollars annually to the farmers of the country is easily demonstrated.

For convenience in designation, the creameries are divided into four classes. Cooperative creameries are owned and operated by the patrons—that is, the persons who supply the cream—and the entire receipts, less actual running expenses and sinking fund, are divided among the farmers in proportion to the amount of butter fat delivered by each. Individual creameries are those owned and operated by private interest and doing local business. When three or more individual creameries are owned or controlled by the same interests, they are designated as combination creameries. The fourth class—

"centralizers"—is composed of creameries that receive cream from greater distances than it can be hauled in by wagons, the distances extending up to 400 or 500 miles. The plants are usually large, and an extensive system of agencies for the purchase of cream is maintained.

The investigations show that the cooperative creamery yields the largest returns to the farmer for his butter fat. The individual and combination creameries, usually being located in close competition with the cooperative creameries, pay very nearly as much. The centralizers, where they have gained a monopoly, pay as little as the farmer will accept. Reports for July, 1907, show that in Kansas and Nebraska, where the monopoly appears to be complete, the farmers received only 17 to 18 cents a pound for their butter fat, while in northern Iowa, Minnesota, Wisconsin, and Illinois, where the cooperative creameries have the field, the prices were from 25 to 26 cents.

The methods of the centralizers are sometimes very reprehensible. Where these concerns have come into competition with small creameries, they have raised their prices to a point that made it impossible for the small concerns to continue, and have thus forced the latter out of business. Competition having been destroyed and a monopoly secured, the prices paid to the farmers were lowered. The large concerns operating over a great territory, with here and there a competitor that they wished to put out of business, could in one locality raise the price paid above that possible to pay with profit, and at other places decrease the price so little as not to be apparent and more than offset the loss. This ability to destroy competition without inflicting self-injury has been used effectively in many localities.

Perhaps the most potent factor, however, in restricting the business of the small creamery has been the special low rates reported to be granted by the railroads to the big creameries. These rates were understood to be much lower than for any similar commodity, being only about one-third of the rate on butter. In Nebraska, in the best territory, the gross earnings for hauling cream were but 13 cents per car mile, while the settling basis between railroads for hauling empty cars was 15 cents per car mile.

The system of killing the small creameries has been carried on to the fullest extent in southern Iowa, Missouri, Kansas, and Nebraska. Taking Kansas as an illustration, it is found that the number of creameries declined from 133 in 1900 to 67 in 1905, while in Minnesota in the same period there was an increase from 582 to 905. The decrease in Kansas is attributed to dissatisfaction and distrust on the part of the farmer with the central creamery, to the low prices paid, the poor quality of the butter, the killing of the small creameries, and the loss of all immediate contact between the farmer and the owner of the business. The increase in Minnesota can be accounted for by just the reverse set of conditions. The loss to Kansas farmers during the last year on account of the low prices alone is estimated at $1,000,000. If Kansas had made 50,000,000 pounds of butter, as it should, instead of 17,000,000, the income to the State would have been, on the same basis of valuation, at least $12,000,000 greater than it is for the present year, and there would have been no less wheat, corn, alfalfa, beef, pork, or any other crop raised. The

reason why Kansas is not on a par with Minnesota, Iowa, and other great dairy States is because the industry has been promoted from the centralizer standpoint and not for the interests of the farmer. Fifteen years ago Kansas and Minnesota stood nearly equal with regard to the creamery industry. Now Minnesota is not only far ahead in volume of production, but the Minnesota farmer gets 6 to 7 cents a pound more for butter fat than does the Kansas farmer. What has been said of Kansas applies in general also to Missouri, southern Iowa, and Nebraska.

Investigation has shown that the highest grade of butter is made only from whole milk delivered to the creamery fresh every day. This is possible only where there are local creameries at convenient distances. The longer the time between milking and churning the poorer the quality of the butter. Shipping cream by railroad except for very short distances is detrimental to the quality of the butter.

The centralizers, on account of receiving cream from long distances, are unable to turn out as high-grade product as the local concerns that use fresher cream, but they are usually managed so as to get every possible cent of revenue from their material. They use the most improved methods of manufacture, get a maximum overrun, and prevent loss in every possible way. The small creameries, on the other hand, are often very lax in these matters, but by reason of the superior quality of their product and their practice of giving full returns to the farmers they are still able to pay 6 or 7 cents a pound more for butter fat. By no means do all of the small creameries make fancy butter, however. Some of them have doubtless succumbed largely because of losses which might have been prevented by better methods.

There can be no doubt that the tendency of the centralizing system is bad for both the farmer and the public. The effect is to exact high prices from the consumer and to pay low prices to the farmer, the profits going to the large operators who control the situation. The small local cooperative creameries should be encouraged. The Dairy Division is already endeavoring to assist the creameries to avoid losses by low overrun, loose methods, etc., and to improve the quality of their product where this is defective, by its service of inspecting and reporting on the butter as it arrives on the market, as hereinbefore described. In order that the farmers may receive proper returns for their product there should be a material improvement in the quality of the butter as found upon the market. This can best be accomplished by encouraging local creameries, better methods of manufacture, and, greatest of all, a discrimination as to quality in the markets. Butter is not bought on the basis of quality, as it should be, but the tendency is more and more in that direction. The chief handicap is a lack of inspectors. The work of the division already shows that national supervision of interstate trade in butter would operate greatly to the benefit of the creameries. The cost of Federal inspection would not be as great as might be at first supposed. A careful estimate based on experience already gained shows that 25 men could handle without difficulty this work. Part of these men could be detailed to work in the field with the creameries to give personal instruction to those most needing it. Such instruction will be needed, especially in the centralized territory where small creameries will be established if

conditions make it possible. It is the belief of many interested in this work that the increased returns to creameries through such supervision and inspection would result in millions of dollars saved to the farmer each year.

Publicity as to the prices received by farmers in various sections for their butter fat would be a powerful agency in enabling the farmers to obtain better returns from the "centralizers." The Department could gather this information and disseminate it. New York, Chicago, and Elgin quotations on butter are not printed in the papers published in the territory most affected by the centralizers. Only local quotations are published, and these are several cents below the actual market prices. The farmers in that territory have no way of finding out what the farmers of other sections are getting.

DAIRY BUILDINGS.

The work of planning buildings of various kinds for dairy purposes has been continued throughout the year. The Dairy Division has many demands for information of this kind, and a constant study is being made of the various forms of buildings for housing cattle, for cheese factories, creameries, and market milk plants. This field is not covered by commercial architects for the reason that as a rule such work does not pay a sufficient revenue. The main object is to produce plans for buildings that are best adapted for the object in view at a minimum cost and that will contain all the features of sanitation that should be included in buildings of this character. During the year 56 plans have been drawn and 504 blueprints made and sent out in answer to requests. In sending these plans to dairymen it is expected that each person will make a report to the Dairy Division of the cost of erection. It is desirable to secure as many accurate statements of cost as possible, in order that approximately correct information may be given to prospective builders. A limited number of these buildings are erected under the supervision of the division. This is done where it is thought desirable to have careful records kept and in locations where there are no previous examples to guide the builder. This has been particularly true of the southern dairy work, as outlined elsewhere in this report.

CHEESE STATISTICS.

The Dairy Division for a year and a half has collected monthly statistics of stocks of cheese on hand. Each month there is mailed to the proprietors of all the storage warehouses and to cheese dealers who store cheese a special form, upon which they are requested to make a report of the stocks on hand on the first day of the month. From these reports a statement is compiled and issued from the office of the Dairy Division about the 5th or 6th of each month. This work seems to meet a demand among the manufacturers and dealers in cheese. A circular letter was issued the 1st of January, 1907, asking those who had contributed to these reports and those who had received them monthly whether in their judgment the work was of enough value to be continued another year. Almost without exception the replies indicated that the work should be continued, many stating that it was very valuable to them in their business.

RENOVATED BUTTER INSPECTION.

The inspection of renovated butter and of the factories producing the same, under the act of Congress of May 9, 1902, has been continued, under the general supervision of Maj. M. W. Lang, with offices in Chicago and New York City.

For the year ending June 30, 1907, there were 49 renovated-butter factories bonded and which paid the Government tax. A few of them were in operation only a part of the year. During the year a combination of 8 factories was consummated, 3 of which have since been permanently closed. One new factory was built and 4 were rebuilt with increased capacity. These 49 factories produced during the fiscal year 62,919,998 pounds of renovated butter, an increase of 9,124,337 pounds over the previous fiscal year. Renovated butter was inspected for export as follows: At Chicago, 3,332,456 pounds; at New York, 1,837,924 pounds, and at Boston, 368,090 pounds, a total of 5,538,470 pounds.

The general condition of the factories during the year was fair from a sanitary standpoint, and the quality of the product was really superior to what it has been in past years. This is probably due to the fact that the packing stock used has been fresher.

Near the close of the fiscal year a committee was appointed by the Secretary of the Treasury and the Secretary of Agriculture to revise the regulations for the inspection of renovated butter. The report of this committee has been submitted to the Secretaries of the two Departments and the new regulations adopted to take effect August 15, 1907. The only essential change made in the regulations was the granting of the privilege to the manufacturers of using the word "process" in place of "renovated," as allowed by law, if the manufacturer preferred the former term.

PUBLICATIONS.

The Bureau's publications are an important feature of its work. Several of those issued or prepared during the fiscal year have already been mentioned. In addition, the Twenty-second Annual Report of the Bureau (for 1905) has been issued, and the Twenty-third Annual Report (for 1906) has been prepared for publication. These annual reports are volumes of several hundred pages, containing special articles and miscellaneous information relating to the live-stock industry and the work of the Bureau. Congress at its last session ordered a new edition of the Special Report on Diseases of the Horse. A chapter on "Osteoporosis, or bighead," was added, and some slight revision made, and soon after the close of the fiscal year the new edition appeared. This book has proved to be one of the most popular publications ever issued by the Government, the total editions approximating 900,000 copies.

The new publications of the Bureau during the twelve months ending June 30, 1907, were 78 in number, consisting of the Twenty-second Annual Report of the Bureau, the annual report of the Chief, 21 bulletins, 16 circulars, 2 Farmers' Bulletins, 30 orders and regulations, 3 Yearbook articles, and 4 miscellaneous publications, aggregating 2,110 printed pages. In addition there were numerous reprints of earlier publications.

REPORT OF THE CHIEF OF THE BUREAU OF PLANT INDUSTRY.

U. S. DEPARTMENT OF AGRICULTURE,
BUREAU OF PLANT INDUSTRY,
Washington, D. C., October 15, 1907.

SIR: I have the honor to submit herewith a report of the work of the Bureau of Plant Industry for the fiscal year ended June 30, 1907.

Respectfully,

B. T. GALLOWAY,
Chief of Bureau.

Hon. JAMES WILSON, *Secretary.*

GENERAL WORK OF THE YEAR.

The appropriation for the Bureau of Plant Industry for the fiscal year ended June 30, 1907, amounted to $1,024,740. Of this sum $105,000 was for the purpose of meeting the ravages of the cotton-boll weevil. A further sum of $40,000 was available from March 4, 1907, from the appropriation for cotton-boll weevil investigations for the fiscal years 1907 and 1908, of which approximately $5,500 was expended to June 30, 1907, leaving $34,500 available for use during the fiscal year 1908 in connection with the remainder of the appropriation.

Of the total funds of the Bureau approximately 30 per cent was expended for administrative and office work and 70 per cent for strictly scientific work.

BUSINESS OPERATIONS.

During the year 5,036 requisitions were issued; 11,000 accounts were received, audited, and paid; 350 requests for contracts were made; 600 letters of authorization were drawn, and 3,500 financial statements were prepared. The system of accounting outlined in previous reports has proved increasingly effective. The method of drawing requisitions has been simplified, considerably lessening the time required for such work. A system of daily reports has been installed with a view to preventing delay in the auditing of accounts. These reports show that approximately 90 per cent of all accounts are audited, approved, and forwarded for payment the same day they are received, the remaining 10 per cent being disposed of early on the day following their receipt.

The Bureau has received and answered during the past fiscal year about 135,000 letters covering a wide range of subjects. This number does not include routine correspondence, such as requests for pub-

lications, seeds, nitrogen-fixing bacteria, etc., but represents only such letters as have called for specific and direct replies. It is the policy of the Bureau wherever a great number of inquiries are received on a particular subject to prepare a circular of general information, thus avoiding the preparation of a direct reply in each particular case.

PUBLICATIONS.

The handling of the publication work of the Bureau has continued in charge of Mr. J. E. Rockwell, Editor, as heretofore.

The total number of new publications issued during the year was 61, aggregating 1,909 printed pages and illustrated with 74 full-page plates and 363 text figures.

In the Bureau series 21 new bulletins and parts of bulletins were issued during the year, while of the 42 Farmers' Bulletins issued by the entire Department 18 were contributed by this Bureau, two additional Farmers' Bulletins being prepared jointly by this Bureau and the Bureau of Entomology.

The wide scope of the publications issued includes reports upon many of the scientific investigations discussed in these pages and is indicated by the following titles of Bureau Bulletins, given in the order of their appearance, as follows: Farm Practice with Forage Crops in Western Oregon and Western Washington; Date Varieties and Date Culture in Tunis; A New Type of Red Clover; Orchard Grass; The Drug Known as Pinkroot; The Effect of Copper upon Water Bacteria; Conditions Affecting Legume Inoculation; Summary of Recent Investigations of the Value of Cacti as Stock Food; A Successful Dairy Farm; A Quick Method for the Determination of Moisture in Grain; Tobacco Breeding; Planning a Cropping System; Seeds and Plants Imported During the Period from December, 1903, to December, 1905; The Application of Vegetative Propagation to Leguminous Forage Plants; The Control of Texas Root-Rot of Cotton; Miscellaneous Papers; Soy Bean Varieties; The Use of Feldspathic Rocks as Fertilizers; Dry Farming in the Great Basin; The Relation of the Composition of the Leaf to the Burning Qualities of Tobacco; The History of the Cowpea and Its Introduction into America.

The Farmers' Bulletins referred to bore the following titles: Seed of Red Clover and Its Impurities; Forage Crop Practices in Western Oregon and Western Washington; A Successful Hog and Seed-Corn Farm; Flax Culture; Leguminous Crops for Green Manuring; A Method of Eradicating Johnson Grass; A Profitable Tenant Dairy Farm; Celery; Spraying for Apple Diseases and the Codling Moth in the Ozarks; Insect and Fungous Enemies of the Grape East of the Rocky Mountains; The Advantage of Planting Heavy Cotton Seed; Comparative Value of Whole Cotton Seed and Cotton-Seed Meal in Fertilizing Cotton; The Nonsaccharine Sorghums; Beans; Evaporation of Apples; Cost of Filling Silos; Farm Practice in the Columbia Basin Uplands; Diversified Farming Under the Plantation System; Some Important Grasses and Forage Plants for the Gulf Coast Region; Home-Grown Tea.

Seven articles were contributed to the Yearbook of the Department for 1906 and afterward reprinted in separate form, as follows: No. 411, The Present Status of the Nitrogen Problem; No. 419, Range

Management; No. 422, Methods of Reducing the Cost of Producing Beet Sugar; No. 427, New Citrus and Pineapple Productions of the Department of Agriculture; No. 429, Promising New Fruits; No. 431, New Tobacco Varieties, and No. 437, Plant Diseases in 1906.

A statement regarding adulterated alfalfa seed found in the open market was prepared in accordance with law and issued as a circular of the Office of the Secretary, while various miscellaneous circulars were issued from time to time.

Three editions were required to meet the demand for the report of the Chief of the Bureau for 1906. In addition to the Farmers' Bulletins, which are reissued from time to time as required, it was necessary to reprint a considerable number of publications issued in previous years. Of the Bureau bulletins two were reprinted during the year, while twenty of the articles contributed to former Yearbooks were reprinted to meet the continued demand for them.

An index to Bulletins Nos. 1 to 100 of the Bureau series has been prepared and issued as Bulletin No. 101.

The work called for by 2,065 requisitions for printing, binding, and ruling for the Bureau was performed during the year at the Government Printing Office and the branch office connected with the Department, the work on 1,791 being attended to in the latter office.

BUREAU REFERENCE BOOK.

In accordance with a plan formulated at the beginning of the fiscal year by which each Bureau of the Department was requested by the Secretary to prepare for his use a handy book of reference to its work, the Bureau has prepared and issued during the year two editions of a little pamphlet setting forth in detail the various lines of scientific investigation conducted, the officers having them in charge, the States or Territories in which they are carried on, and the approximate annual cost of the work. The interrelation of various lines of work is also shown, as is cooperation with other bureaus of the Department, the State experiment stations, and others.

ORGANIZATION AND POLICY.

The Bureau organization outlined in the last report having proved very effective has been adhered to except where changes have been necessitated by the reorganization or segregation of certain lines of investigation. The former office of Plant Breeding Investigations, up to April 1, 1907, in charge of Dr. H. J. Webber, was, upon the resignation of Doctor Webber on that date, segregated into three distinct and coordinate offices, these being (1) Cotton and Tobacco Breeding Investigations, (2) Alkali and Drought Resistant Plant Breeding Investigations, and (3) Corn Investigations, with Messrs. A. D. Shamel, T. H. Kearney, and C. P. Hartley, respectively, as physiologists in charge. With the exception of cotton breeding, these lines of work have been prosecuted since their inception by the officers named, under the direction of Doctor Webber, the change simply giving to each branch the equal rank warranted by its normal growth.

In accordance with the agricultural appropriation bill enacted at the last session of Congress, the tobacco work formerly carried on by the Bureau of Soils was on July 1, 1907, consolidated with the tobacco-

breeding investigations of the Bureau of Plant Industry. The work inaugurated by the Bureau of Soils in the Southern States will be continued.

The work of seed and plant introduction and distribution has been somewhat reorganized and segregated since the last report was issued, and now consists of four separate and coordinate officers, as follows: (1) Seed and Plant Introduction, David Fairchild, agricultural explorer, in charge; (2) Forage Crop Investigations, C. V. Piper, Agrostologist in charge; (3) Vegetable Testing Gardens, W. W. Tracy, sr., superintendent, and (4) Congressional Seed Distribution under the immediate direction of the Chief of Bureau, with Mr. Lisle Morrison as assistant in general charge.

The Mississippi Valley Laboratory, maintained up to July 1, 1907, at St. Louis, Mo., was on that date abolished, and the investigation of forest diseases will be conducted from headquarters in Washington, D. C., in close cooperation with the Forest Service, by Dr. Haven Metcalf, Pathologist in Charge, assisted by Messrs. George G. Hedgcock and Perley Spaulding.

Since the last report was issued two new branches of the Bureau have been established: (1) Crop Technology Investigations, in charge of Dr. N. A. Cobb, formerly of the Hawaiian Sugar Planters' Experiment Station; and (2) the South Texas Garden, at Brownsville, Tex., which has been placed in charge of Prof. E. C. Green, Pomologist, formerly of the Texas Agricultural Experiment Station. The work in crop technology has for its object the development of improved apparatus for use in various branches of agriculture. An attempt will be made to apply the centrifugal method to the testing of grain for smut, with the idea of introducing greater certainty into the market quality of samples of commercial lots of grain as well as grain to be used for seed purposes. A study will also be made of apparatus for use in grain standardization, dry-land agriculture, and for industries with which the work of the Bureau has to deal.

The South Texas Garden was established during the latter part of the fiscal year and its work is still in the formative stage. A portion of the Fort Brown Military Reservation was placed by the War Department at the disposal of this Bureau, and work in the growing and testing of various plants believed to be adapted to culture in south Texas is to be actively developed.

The work of grain standardization, briefly mentioned in the last report, has been fully organized into a branch of the Bureau.

COOPERATION WITH OTHER BUREAUS IN THE DEPARTMENT.

The Bureau of Plant Industry is cooperating in a number of ways with various other bureaus in the Department. Reference has already been made to certain changes involving closer relations with the Forest Service in the investigation of diseases affecting forest products. Through an arrangement made with the Forester, Mr. F. V. Coville has been assigned to a special investigation of matters pertaining to the handling of the forest reserves, with particular reference to the conservation of the forage and the reforaging, wherever practicable, of these areas. Further cooperation with the Forest Service has for its object the securing of data relative to the loss of stock through poisonous plants. This work is under the direct

charge of Dr. Rodney H. True, and the plan involves bringing to the attention of the Forest Service information which will be useful in preventing stock injuries.

Other cooperative lines of investigation with the Bureau of Chemistry, the Bureau of Soils, and the Bureau of Entomology are being conducted. These are referred to in this report under their respective heads.

RELATIONS WITH AGRICULTURAL EXPERIMENT STATIONS.

Very cordial relations have been established with agricultural experiment stations in the matter of cooperative work. The Bureau's policy of encouraging and securing whenever practicable the assistance of the State stations in its various lines of investigation has been continued. In connection with its Plant Disease Survey the Bureau is cooperating with about fifteen stations, and it is planned to increase the number in order to obtain a very comprehensive knowledge of the prevalence of various plant diseases in all parts of the United States. In the corn-breeding work twenty-six stations are cooperating in the testing of seed corn which has been developed through careful breeding and selection. In its investigations of dry-land agriculture the Bureau is being assisted by all of the State stations in the Great Plains area, while twenty-six stations in various States are cooperating in the propaganda work with forage crops and cereals.

In connection with the work of plant introduction the Bureau has furnished all the State experiment stations in the United States varying quantities of seeds and plants for trial. These seeds and plants have either been secured at the request of the experiment stations, imported at a very considerable expense from foreign countries, or imported on the initiative of the Office of Seed and Plant Introduction and placed at the stations after correspondence with the directors or horticulturists who have expressed a desire to have them forwarded for trial. It is the practice of the Bureau in matters of this kind not to enter into any signed memorandum of understanding. In all other lines of cooperation, however, it is the practice to have a memorandum of understanding clearly setting forth the responsibilities of the Department and the stations, signed by the Chief of the Bureau and the director of the station. This plan has now been followed for a number of years and has worked satisfactorily.

JAMESTOWN EXPOSITION.

The Bureau was allotted 1,486 square feet in the United States building on the Exposition grounds for its exhibit, which is in charge of Prof. F. Lamson-Scribner. The exhibit of the Bureau is patterned after those at the Louisiana Purchase and the Lewis and Clark expositions, much of the material used at the former expositions, such as models of fruits, specimens, photographs, etc., being utilized. The various lines of investigation pursued by the Bureau are well represented, there being exhibits of its work with fruits, cereals, tobacco, drugs, fibers, pure seed, nitrogen-fixing bacteria, etc.

One of the most interesting features of the exhibit is a model in plaster of a 160-acre southern farm designed for combined cotton and hog raising and dairying. A small pamphlet was prepared for

distribution describing such a farm and presenting desirable methods of cultivation, crop rotations to be followed, etc.

SPECIAL INVESTIGATIONS AND EXPLORATIONS.

Attention is called to the special investigations inaugurated for the purpose of securing reliable data regarding denatured alcohol. With the growing interest in this subject it seemed proper that the Bureau of Plant Industry should inaugurate work which would throw light on numerous questions not yet quite fully understood. To this end the Department has secured the services of Dr. Edward Kremers, of the University of Wisconsin, and cooperative arrangements have been entered into with this institution for carrying on the work.

The Bureau has continued its explorations of foreign countries for the purpose of securing new and promising seeds and plants. Some very interesting discoveries have been made in this connection during the year and the results are set forth elsewhere.

CHANGES IN PERSONNEL.

From September 1, 1906, to August 31, 1907, the following changes have been made in the personnel of the Bureau: Resignations, 75; deaths, 6; dismissals, 3; transfers from the Bureau, 25; and furloughs and terminations of appointments, 312; making a total of 421 employees dropped from the rolls during that period. During the same period there have been made 558 appointments, increasing the total force of the Bureau by 137. On September 1, 1907, the numerical strength of the Bureau was as follows: In Washington, 406; outside of Washington, 371; total, 777. The total number of employees in the Bureau on the same date a year ago was 640.

SPECIAL PROBLEMS AND PROJECTS IN THE LABORATORY AND FIELD.

The work of the Bureau as now conducted is planned so that the project or problem is the central feature. Necessarily the different problems will at times run together and more or less overlap, and where this occurs cooperation between the men in charge of the various problems is effected.

In the following pages some of the work carried on the past year is outlined, together with brief statements as to future plans.

LABORATORY OF PLANT PATHOLOGY.

The Laboratory of Plant Pathology, under Dr. Erwin F. Smith, has conducted various lines of investigation during the year. Besides the regular studies, the laboratory has been called upon for much miscellaneous information. Microscopic examinations and permanent mounts have been made, and the laboratory has also preserved material of many different diseases. Answers to many letters have been prepared and research work on the biology of organisms inaugurated, and the laboratory has furnished all the affiliated workers in the field with the culture media required for the proper investigation of the diseases under study.

In association with Dr. Charles O. Townsend, special studies have been made of root-galls and crown-galls of a variety of plants with a view to determining their cause. The first work was done on tumors of the Paris daisy, from which various organisms were isolated. One of the organisms was found to be pathogenic, and inoculations of pure cultures of this organism reproduced readily typical knots in the absence of all other organisms.

These investigations are of the highest importance as throwing light on a disease which has for years baffled pathologists in various parts of the country. Quite a variety of plants subject to root or stem tumors, such as the chestnut, peach, almond, hop, etc., have been inoculated with the organism in question, to determine whether it is restricted to the daisy or can possibly be the cause of the tumors occurring on these other plants. As a result of these studies, it has been shown that the organism isolated from the daisy can reproduce tumors readily on the roots and stems of the peach, hop, and a number of other tumor-bearing plants.

Rice diseases.—Experiments with reference to the control of the disease known as rice-blast have been continued during the past year by Dr. Haven Metcalf. Extensive experiments with fertilizers inaugurated in the summer of 1906 failed on account of the breaking of a dike, which completely washed out the field where they were located. Laboratory studies during the past year have proved conclusively that rice-blast is due to a parasitic fungus and that the malady found here is closely related to one occurring in Italy under the name of "brusone."

Cocoanut bud-rot.—Investigations in the West Indies by Mr. John R. Johnston, continuing those made by Dr. Erwin F. Smith, have revealed the identity of the cocoanut bud-rot in Cuba, Jamaica, Trinidad, and British Guiana.

Inoculations were made with organisms derived from the rotting tissues, and it is planned to carry out in the near future some experiments looking toward the prevention of the disease, which now threatens the entire destruction of the cocoanut industry in eastern Cuba. If the disease is not now present in Porto Rico, as seems to be the case, it is highly important that it should be kept out, as there are lands enough in western Porto Rico to grow all the cocoanuts needed for the United States. It is urged that measures be taken to restrict the importation of the cocoanut into Porto Rico. All nuts introduced for planting should be subject to inspection and proper disinfection at the port of entry, and the introduction of young trees for planting should be forbidden altogether, lest along with them should be introduced this destructive disease.

Cotton diseases.—The work on cotton diseases in the Southern States, in charge of Mr. William A. Orton, Pathologist, has been continued during the year. A three-year experiment with Sea Island cotton at Blackshear, Ga., has been completed, and the work at that point discontinued. The conclusions reached have been published in Farmers' Bulletin No. 302. Further work on Sea Island cotton has been arranged for in cooperation with the Florida Experiment Station, the object being to continue the breeding work for wilt resistance

and for general improvement and to conduct a campaign for better methods of producing and handling this fine staple.

The breeding of wilt-resistant varieties of Upland cotton has been continued with good success. Two varieties are now sufficiently fixed for distribution, and seed for this purpose is being grown at Lamar, S. C., and Notasulga, Ala., with auxiliary experiments in Georgia and Louisiana. The continued spread of cotton wilt has led to a large demand for resistant varieties.

The study of the causes of the shedding of bolls in cooperation with the Alabama Experiment Station, as far as the effect of weather and soil conditions and the comparative reaction of varieties is concerned, is approaching completion.

In addition to the work carried on under Mr. Orton, Dr. C. L. Shear has continued his investigations of certain special diseases in the Southwest, notably in Texas. The principal line of work here under investigation was the Texas root-rot. Very satisfactory results in controlling this disease were obtained last year by deep fall-plowing of infected soil, and this method has been given a more extensive and thorough trial this season in order to determine and demonstrate its efficiency. Laboratory work on the black-arm and angular leaf-spot is in the hands of Doctor Smith.

Breeding wilt-resistant watermelons and cowpeas.—Excellent results are being obtained in the work under way at Monetta, S. C. A variety of watermelon resistant to wilt has been successfully developed and is now growing on 15 acres of infected land. A thorough test of the shipping quality and market value of this melon will be made this season as a preliminary to propagating it for distribution. Supplementary breeding work on watermelons has been continued at Auburn, N. C., in cooperation with the North Carolina Experiment Station, and favorable progress has been made, though no marked results are expected this year. Several promising new hybrid cowpeas are being tested for resistance to wilt and root-knot at Monetta, S. C. The Iron variety continues to show itself to be of the greatest value to southern agriculture on account of its resistance to root-knot and is coming into much more general cultivation.

Disease-resistant potatoes.—Thorough investigation of the life-history of *Phytophthora infestans*, the cause of the late-blight of potatoes, and of the physiological conditions governing disease resistance in potatoes is being made for this Bureau by Prof. L. R. Jones at the Vermont station. The laboratory study of various bacterial potato rots is being undertaken by Doctor Smith.

The second of a series of three cooperative trials of disease-resistant varieties has been carried out at the Vermont, Colorado, Florida, and Oregon stations, and interesting results have been secured. Considerable disease resistance has been discovered in some of the new and introduced varieties, but some doubt still remains whether these possess the necessary commercial qualities to make them thoroughly successful in general culture. Cooperative breeding work with potatoes is in progress at the Vermont station.

Other plant diseases.—Progress has been made in the study of pecan diseases and of some minor diseases of cotton. An increased amount of time has been devoted to the study of diseases of truck

crops in the Eastern States. Mr. W. W. Gilbert has nearly completed a careful study of the root-rot of tobacco due to *Thielavia basicola*, which has been prevalent in Connecticut and other States. Field and greenhouse experiments show that it can be controlled by disinfection of seed beds either by the use of formaldehyde or by steam heat.

PLANT DISEASE SURVEY.—Under the charge of Mr. William A. Orton, assisted by Miss Adeline Ames, a line of work which has been in progress for several years has been broadened. A careful attempt is being made to determine and record the annual prevalence of plant diseases in the United States, to learn the distribution of new diseases, and to study epidemics of plant diseases wherever they occur. Thirteen experiment station collaborators are assisting in this work. The usual summary of this subject was published in the Yearbook of the Department for 1906.

ECONOMIC COLLECTIONS OF MYCOLOGICAL AND PATHOLOGICAL MATERIAL.—It is highly essential and important to maintain collections of pathological and mycological material for reference. A great deal of the material forwarded to the Department is preserved, and in addition efforts are made to keep as complete sets as practicable of the economic fungi of the United States and other countries.

FRUIT DISEASE INVESTIGATIONS.

The work of investigating the diseases of fruits is closely affiliated with that of the Laboratory of Plant Pathology and is in direct charge of Mr. M. B. Waite. Orchard diseases have received special attention during the year and have been even more prevalent than usual, not only in the Eastern States, but on the Pacific coast as well.

PEAR-BLIGHT.—The Bureau has continued its efforts to aid the California pear growers in their fight against this disease. The work, as in previous years, was done in cooperation with the State experiment station and the State and county horticultural commissioners. Under the instruction and guidance of Department and State officials much good work has been accomplished and a great many orchards have been partially or wholly saved from destruction, but the blight still remains a serious menace to the entire industry, and many fine orchards have gone down during the past year. As a rule, however, where the best work was done in eradicating the hold-over blight the best results have been secured during the season of 1907. During the winter six trained pathologists, and part of the time seven—half the entire force of the Bureau engaged in the investigation of fruit diseases—were kept on this work. The Department expects to continue this work and to keep three men in California during the winter of 1907–8. The disease has destroyed many fine apple trees in the East, particularly in Pennsylvania, Maryland, and Virginia, where additional investigations have been carried on.

LITTLE-PEACH AND PEACH YELLOWS.—An eradication test against these diseases has been carried on in connection with the Cornell Experiment Station in Niagara County, N. Y. The first year's eradication was fairly well done, and efforts will be made to more perfectly

carry out this work during the summer of 1907. Additional attempts have been made to secure the eradication of these diseases in Virginia and West Virginia in cooperation with the State experiment stations.

GUMMING FUNGUS, OR SHOT-HOLE DISEASE OF THE PEACH.—Experiments in the treatment of the gumming fungus were carried on through the winter of 1906–7. Carefully arranged experiments were tried on the peach, apricot, and almond, and as far as the peaches were concerned were gratifyingly successful, fully corroborating the preliminary tests of the previous season. As a result of the previous year's spraying, treatment for this disease was carried on very generally, although not universally, in California peach orchards. Where the spraying was well done and timely, excellent results were secured. The disease was unusually severe and probably of increased virulence, but possibly worse on account of the excessive rains, and especially of late spring rains. The disease on the almond and apricot was shown to be identical, but still further spraying experiments are necessary to properly treat the disease on these fruits. This malady is by far the most destructive disease of peaches, apricots, and almonds on the Pacific coast and has been the cause of widespread failure of these fruits. As far as the peach is concerned the disease may be considered entirely mastered, proper and timely spraying with Bordeaux mixture being entirely successful. There is little doubt that further tests with the same spray on the apricot and almond will demonstrate its effectiveness against the disease on these trees.

APPLE CANKERS.—Several important apple cankers have been investigated and treatments are under trial for the prevention of this disease.

CHLOROTIC DISEASES OF FRUIT TREES.—Investigations of the yellow disease or chlorotic disease of fruit trees, which attacks peaches, apricots, oranges, and a variety of other fruits and trees, were begun in a preliminary way in 1906. Some elaborate studies of this disease will be continued during 1907. Carefully planned pot experiments and greenhouse tests are now under way.

RUSSETING OF APPLES AND PEACH FOLIAGE INJURY BY BORDEAUX MIXTURE.—This subject is an important one, inasmuch as a great deal of harm has come during the past year as a result of copper injury on apples. The peach is usually injured more or less by Bordeaux mixture, but the injuries have been so serious during the past season that it will be impossible in the future to recommend the use of Bordeaux mixture on the peach when in foliage unless new light can be obtained on the subject. Further studies of this troublesome injury are now being made.

SPRAYING DEMONSTRATIONS.—This type of work is being carried out on a large scale by Mr. W. M. Scott and two assistants in Missouri and Arkansas. The results last year of the efforts to prevent bitter-rot and apple-blotch caused by Phyllosticta and apple-scab were gratifying. Some of the experiments failed on account of the nonappearance of the disease, but in most places the diseases occurred in their usual abundance, and fine results were secured. Farmers' Bulletin No. 283 summarizes the results of this work for 1906. This year (1907) still more elaborate tests have been made, but some of the ex-

periments again have been rendered of no avail through frost injury to blossoms. Some of the apple bitter-rot experiments, however, are showing up finely, and excellent results are being obtained against the apple-blotch, which is a serious disease in the Ozark region.

PEACH AND PLUM BROWN-ROT INVESTIGATIONS.—This disease still remains the most troublesome to prevent of any of the stone-fruit diseases in the humid United States. However, the investigation of this difficult disease is being continued, and a series of spraying experiments has apparently given some good results.

GRAPE DISEASES.—The investigations of grape diseases which are being carried on by Dr. C. L. Shear and his assistants have been extended this season to New York and Michigan, where very serious losses from black-rot and other diseases were sustained in 1906. Owing to the weather conditions, which did not favor the development of black-rot last season in the Pennsylvania vineyards, no decided results were obtained in the spraying experiments conducted there.

Spraying experiments are being made for the purpose of demonstrating the efficiency of Bordeaux mixture as a means of controlling black-rot, and also to discover, if possible, methods which may increase the efficiency or lessen the expense of treatment. Study is also being made of soil and climatic conditions in their relation to the diseases, and laboratory studies of the life histories of the various fungous parasites attacking the grape are also being carried on.

CRANBERRY DISEASES.—The work on cranberry diseases, which is in charge of Dr. C. L. Shear, has been devoted chiefly to the improvement of spraying methods and to investigations of new diseases. As pointed out in former reports, and as set forth in bulletins of the Bureau, several of the most destructive cranberry diseases have been very thoroughly investigated, their causes determined, and methods of prevention demonstrated. Special attention is to be given in the future to certain new diseases found in the Wisconsin cranberry areas and elsewhere.

ANTHRACNOSES.—In connection with a study of the life histories of the anthracnoses of fruits, it has been found desirable to study the forms which are found on other hosts. The results of this work have shown that a large number of the forms found on different hosts are very closely related and perhaps identical. The ascogenous or perithecial stages have been procured in pure cultures from twelve different hosts. A report by Dr. C. L. Shear and Mrs. A. K. Wood has already been published in regard to eight of these forms. It is hoped to determine by cross-inoculation experiments whether these can be transferred from one host to another as parasites, as this will have an important bearing on the prevalence and distribution of these diseases and their control.

FOREST PATHOLOGY.

Owing to the contemplated changes in the staff connected with the studies of diseases of forest trees and forest products, it was necessary to close up a number of lines of work preparatory to moving the

headquarters for all these investigations to Washington. The general work is in charge of Dr. Haven Metcalf and, as already pointed out, he is cooperating closely with the Forest Service.

DISEASES OF THE RED GUM AND OF OTHER WOODS.—During the year the results of the experiments on the diseases of the red gum were put together in the form of a bulletin, which is now going through the press. Field studies of the fungi causing sap-rot have been continued and advice has been given to logging companies, a great many of whom are now practicing with the very best results the methods which have been worked out. Observations have been made on what is known as the leaf-dropping disease of white pine. The investigations to date have shown a wide prevalence of the disease, but only preliminary work has so far been undertaken.

Work on the cause of the stain in wood pulp has been carried on in the pulp warehouses in New York, and a number of fungi which cause deterioration of the pulp have been investigated. The fungus causing this stain has been determined and a full description of its methods of attack and suggestions for preventing the trouble have been prepared.

During the summer of 1906 Dr. Perley Spaulding continued his studies in the Adirondacks to determine questions dealing with the life history of the fungus *Polyporus igniarius*, which destroys beech and other hard woods. Preliminary studies have also been made of the so-called white-rot of the poplar. Extended reports upon both of these diseases have been submitted.

The work on the tupelo gum shows that this wood of all woods so far known is the most susceptible to fungous diseases.

A report has been written on the diseases of hard-wood forest trees. This report discusses the distribution and extent of injury caused by various types of diseases of hard-wood forest trees, gives a description of some of the fungi causing such diseases, and concludes with a general discussion of those types of fungi which cause diseases in structural hard-wood timber, together with methods of prevention in living trees and in structural hard-wood timber.

CROWN-GALL STUDIES.—The work on the study of the crown-gall diseases has been confined largely to the study of the hard crown-gall and hairy-root diseases of the apple tree. A bulletin on this subject has been prepared and will soon be presented for publication. A study of the effect of this disease upon the life and fruitfulness of the apple tree will be continued by Dr. George G. Hedgcock. The study of the grape crown-gall disease has also been continued by Doctor Hedgcock and further progress has been made in the selection of resistant stocks.

DAMPING-OFF DISEASES IN FOREST NURSERIES.—The investigations of the damping-off diseases were continued by Dr. Perley Spaulding at the nurseries of the New York State forestry commission and at a number of the larger commercial nurseries. About half a dozen different species of fungi, which seemed to be the cause of the disease at different places, were obtained. Thus far the investigations have shown that fungi belonging to the genus Fusarium are responsible for far the greater part of the damping-off, as it has been found occurring in various nurseries. Cooperative experiments with the

New York State forestry commission were made looking toward the control of these diseases by the means of chemicals. Extensive studies are being made upon the different species of Fusarium found and a considerable number of greenhouse and outdoor experiments have been carried on.

PLANT BREEDING WORK.

Plant breeding work as an incident to other investigations is being conducted by a number of men in the Bureau. For administrative purposes, however, the principal work in this line is grouped under four heads: (1) Cotton breeding, (2) tobacco breeding and improvement, (3) breeding alkali and drought resistant plants, and (4) corn breeding and improvement.

In all of these lines of investigation breeding is the main feature or project. At the same time, however, important questions in the matter of culture and general improvement in the growing of the crops are under investigation. Thus, in tobacco breeding it is not only necessary to improve the types by breeding and selection, but it is further necessary to discover and apply the best methods of growing the crop and of handling it from the seed until the product is finally harvested.

COTTON IMPROVEMENT.

As pointed out elsewhere the cotton work has been placed in charge of Mr. A. D. Shamel, who is assisted by Dr. D. N. Shoemaker and a corps of laboratory and field men. As heretofore, special attention has been given to the important questions connected with securing improved types of cottons, increased yield, better fiber, earliness of maturity to prevent injury by the boll weevil, and similar lines of investigation.

Progress has been made in the improvement of this crop through the development of practical apparatus for the purpose of separating the heavy from the light cotton seed. Experiments conducted by the Bureau have proved that heavy cotton seed will produce more thrifty plants than light seeds. The more vigorous plants from heavy seeds produced a larger yield of a better grade of cotton than cotton borne by plants from light seeds. The increase in yield due to the use of heavy seed has been found to be from 8 to 10 per cent. With a view to having this work applied in a practical way by cotton planters, numerous demonstrations were inaugurated during the past season. This work was carried on in a number of Southern States, at points where the striking difference between the use of the two kinds of seed would serve as an object lesson.

An important observation regarding the apparent lack of uniformity in the length of lint of some of the long-staple cottons was made by one of the investigators in the cotton work during this season. It was found that the apparently irregular and extra-long fibers, which heretofore have been regarded as evidence of lack of uniformity in the length of fibers and an undesirable character, are simply the result of the entangling of the ends of fibers from adjacent seeds. Many important varieties of cotton, such as the Griffin, have been neglected by cotton breeders on account of apparent lack

of uniformity in length of fiber. Special attention will now be given to these varieties, as, in the light of the above observation, they can no doubt be developed by seed selection to the advantage of the cotton industry.

EARLY-MATURING STRAINS OF COTTON.—Special attention has been given to the production of improved early-maturing strains of cotton for adaptation to the cotton boll weevil district. A comprehensive study has been made of the possibility of the production of early-maturing varieties, and already very satisfactory results have been secured. Considerable seed of improved types has been distributed and the reports from this seed are very gratifying. Among the varieties distributed are an early strain of the Triumph variety of cotton and a hybrid of the Triumph with the King variety. This last-named variety is intermediate in character between the parent varieties, having a much larger boll than the King and being almost as early. Furthermore, it has valuable stormproof characteristics, which is important in the boll-weevil district. A large number of crosses, hybrids, and select strains of cotton are under observation and trial in various cotton-producing districts in the cotton belt, with a view to securing new and improved varieties for general use or for particular purposes.

STUDIES OF COTTON SEED AND COTTON-SEED MEAL FOR FERTILIZING PURPOSES.—Special attention has been given to the use of cotton-seed meal as a fertilizer instead of whole cotton seed, and the value of cotton-seed meal for this purpose has been demonstrated on a practical scale.

IMPROVED COTTON MACHINERY.—Efforts have been made by our cotton experts to encourage in every way the use of improved machinery in the handling of the crop. This work has resulted in the invention of some improved apparatus for preparing the soil, planting the seed, and harvesting the lint. Practical field tests are being made of these machines, and the results will be published at an early date.

FUTURE PLANS.—One of the most important lines of work in cotton breeding, which has heretofore been somewhat neglected, will soon be begun, namely, a careful study of cotton fields over a wide area with a view to finding superior plants. The seed, or a portion of the seed, from the selected plants will be tested the following season, and from the most promising progenies seed will be propagated with a view to securing improved strains of cotton adapted to local soil and climatic conditions. Many successful growers have already signified their interest in this important work and have promised their hearty cooperation and assistance to the Bureau in carrying this work to a successful completion.

IMPROVEMENT OF TOBACCO.

The principal tobacco investigations of the Bureau have been conducted during the past year in Connecticut, Florida, Maryland, Kentucky, and Ohio, the object being to secure new types by breeding and selection and improved methods of growing and handling the crop.

TOBACCO IN THE CONNECTICUT VALLEY.—The investigations of the Bureau in the Connecticut Valley, begun in 1903, with regard to the

possibility of improving the yield and quality of the tobaccos grown there have resulted in the adoption of improved methods of breeding, the production of several important new varieties of tobacco, the invention of a practical and widely used tobacco-seed separator, the demonstration of the practicability of improving both yield and quality by seed selection and breeding, and the invention of apparatus for the treatment of tobacco-seed beds to prevent several destructive fungous diseases affecting the crop.

Incident to this work important investigations have been carried on with winter cover crops, with a view to saving part of the expense of fertilizers. Special studies have been made of hairy vetch in this connection and it has proved quite promising.

As a direct result of the breeding work, four valuable new varieties of tobacco have been produced, and in the past season they have proved a great improvement over the unimproved sorts in the sections to which they are adapted.

The Uncle Sam Sumatra, a selection of a sport from Florida Sumatra tobacco grown under tent in Connecticut in 1903, has been extensively grown in Florida under shade the past season with most profitable results. It is also being successfully grown in other tobacco-growing districts. The Hazlewood Cuban, a selection of a sport of Cuban-grown seed planted in the Connecticut Valley in 1903, is being profitably grown under shade in the Connecticut Valley and both under shade and in the sun in Florida and other sections. The Brewer tobacco, a hybrid of Connecticut Broadleaf and Cuban varieties, has come perfectly true to seed the past season in the Connecticut Valley and is proving to be a great improvement over the Connecticut Broadleaf type, well adapted to the conditions under which it is grown.

In the spring of 1906 a serious disease of tobacco was discovered in the Connecticut Valley. Since that time efforts have been made to discover efficient means of controlling the trouble. The disease is spreading rapidly in the affected areas, rendering tobacco culture unprofitable. Steam sterilization of the soil is an effective way of preventing injury in the seed beds.

With a view to aiding the tobacco growers, hairy vetch, a winter legume, has been introduced for a cover crop and its value has been fully demonstrated. Hairy vetch not only adds to the nitrogen content of the soil but improves the tilth, enabling the tobacco plants to withstand drought, excessive rainfall, and other unfavorable conditions better than where other or no cover crops were grown. Acclimated strains of the hairy vetch plants are being bred by the Bureau in the Connecticut Valley and effective and practical methods of seed growing devised.

Studies of the best methods of curing tobacco, particularly the control of the conditions of heat and moisture in the curing barns, are being vigorously prosecuted. In the season of 1906 and also in 1907 a careful study was made of the actual temperature and moisture conditions in a number of barns, with a view to securing a device for the use of growers in making exact determinations of temperature and moisture.

TOBACCO WORK IN FLORIDA.—Special attention has been given in Florida to the improvement of types of tobacco by breeding and

selection. Root-knot, a nematode disease, is quite destructive in the tobacco sections of the State. Types have been secured which are resistant to this trouble. In 1906 over seven hundred apparently resistant plants were selected and the seed grown under bag in badly affected fields. On final examination, after these plants were pulled up and the roots closely examined, only three were found to be immune to the attack of the nematode. In careful field tests the past season the seed from these three plants produced fully resistant strains of tobacco. A comprehensive test of fertilizers best adapted for the production of the largest possible yields was undertaken the past season and is planned to be continued for several years in order to get reliable data.

TOBACCO WORK IN MARYLAND, KENTUCKY, AND ELSEWHERE.—In Maryland tobacco investigations have been confined largely to the production of improved strains of the Maryland type and to the distribution of seed of these strains to growers. The past season a field demonstration of tobacco was grown in every tobacco county of Maryland and the growers generally are recognizing the value of the improved sorts. In Kentucky the Bureau is cooperating with the Kentucky Experiment Station in the breeding of improved varieties of tobacco for the different tobacco districts of the State, and cooperative work is under way in Ohio along similar lines.

Other important lines of work with tobacco are carried on in New York, Virginia, Texas, and Alabama.

LABORATORY STUDIES OF TOBACCO.—In the tobacco laboratory, methods of testing tobacco have been carefully studied. In the course of the work of this laboratory a cigar-smoking machine for testing cigars and a leaf-testing machine for testing the burn of the leaves have been devised and put into practical use. It has been found that the nicotine content of the tobacco leaf varies remarkably. The investigation of this laboratory leads to the hope that strains of tobacco high or low in nicotine content can be secured by breeding and selection. Extensive experiments are now under way to decide the matter. In this connection a new and economical method of nicotine determination has been devised, enabling the investigator to make many more determinations in a given length of time than has heretofore been possible.

ALKALI AND DROUGHT RESISTANT PLANT BREEDING WORK.

The investigations in the breeding of plants adapted to cultivation in alkali soils and arid regions have been carried on as heretofore by Mr. T. H. Kearney, Physiologist, assisted by Mr. L. L. Harter. The object of these investigations is to ascertain what crop plants are best suited to growing under these adverse conditions and to increase their adaptability by breeding. The work has progressed far enough to indicate that certain species and varieties of crop plants are much better adapted than others to such conditions, and these alone are being selected for further improvement.

ALKALI-RESISTANT FIELD CROPS.—Work is being carried on in western Nebraska and in Utah, Nevada, and Arizona in testing various crop plants to ascertain which are best adapted for growing on alkali

soils and to further adapt such as seem most promising. In Nebraska the work is in cooperation with the Nebraska Experiment Station, and in Nevada and Arizona it is conducted in association with Mr. C. S. Scofield, Agriculturist in Charge of the Western Agricultural Extension Investigations of this Bureau, cooperating with the United States Reclamation Service. In Nebraska and Nevada a large number of varieties of wheat, oats, barley, and other cereals, leguminous forage plants, sorghum, meadow grasses, and sugar beets are being tested. In Utah sugar beets, and in Arizona sorghums, are under investigation. The work with sugar beets is conducted in cooperation with Dr. C. O. Townsend, Pathologist in Charge of the Sugar-Beet Investigations of this Bureau.

Marked differences between different species of crop plants and various strains and varieties of the same species are coming to light. Of leguminous plants, the vetches, horse bean, species of Lathyrus, sweet clover, and Canada field peas are the most promising. Tall meadow oat-grass, redtop, and Hungarian brome give indications of being among the grasses that are best adapted to alkali soils. Certain varieties of barley are apparently the most resistant cereals. Two hundred selections of resistant sugar beets made last season were successfully siloed and a considerable percentage of them has flowered this season. It is still too early to report on the condition of the sorghums. Of miscellaneous forage plants, Essex rape has given particularly good results in alkali soil. The most resistant individuals of the plants mentioned are being selected as the basis for obtaining strains still better adapted to these conditions. During the coming fiscal year it is proposed to continue variety tests and breeding experiments of the most promising species at the four localities mentioned.

Physiology of alkali resistance.—In cooperation with Dr. L. J. Briggs, Physicist in Charge of the Physical Laboratory of this Bureau, experiments are in progress to determine the effect of alkali soils and soil extracts upon various crop plants under controlled laboratory conditions, using soils from the different stations where experiments are being conducted.

Drought-resistant field crops.—Work in breeding drought-resistant strains of various field crops in cooperation with the South Dakota Experiment Station is being continued at the Highmore substation. Mr. W. A. Wheeler, who had charge of this work on behalf of the station, resigned this spring and the work for the station is now under the supervision of Mr. John S. Cole, agronomist of the station. Owing to the unusually heavy rainfall, the conditions last season were unfavorable to selection for drought resistance; but the present season (1907) promises to be drier and it is hoped that a better opportunity will be had to ascertain what strains and individual plants are most resistant. Indications point to the horse bean (*Vicia faba*) as being one of the leguminous plants that is best fitted for growing without irrigation in regions of limited rainfall, and as this plant makes a heavy growth, there seems little question of its value as a source of the organic matter that is so much needed in many arid soils.

Cottons for the arid Southwest.—Many selections were made from the Upland (chiefly long-staple) and Egyptian varieties of

cotton that were grown last season in the Colorado Valley in Arizona. Two acres of excellent land were planted this spring to these selections and 2 acres more were devoted to one-fourth-acre plats for yield tests of the most promising varieties. A good stand of the selections was obtained, and in at least two of the one-fourth-acre plots thoroughly satisfactory yield tests are to be expected. The Southern Hope variety (long-staple Upland) yielded last season at the rate of very nearly one bale to the acre, the fiber being of excellent quality and averaging 1½ inches in length. A gratifying degree of improvement in quality and productiveness was observed in the selection of Mit Afifi (the standard Egyptian variety), a work that has been carried on for several years, and it is believed that an improved strain of this valuable variety thoroughly adapted to Arizona conditions is assured.

NATIVE GROWTH AS A SOIL INDICATOR.—In order to furnish a scientific basis for the use of the natural plant covering as an indicator of the character and crop-producing power of the soil, particularly in regions where large bodies of land are still occupied by the original plant growth, a survey of the natural vegetation has been undertaken in the Great Plains region of eastern Colorado. A locality has been selected where there is a marked diversity of soils, natural vegetation, and crop conditions, all of which are being studied in connection with one another and with local variations in meteorological factors and in the distribution of soil moisture. This work is being carried on by Dr. H. L. Shantz, of the University of Missouri, acting as a special agent of the Bureau. It is expected that it will serve as a basis for investigations along this line in other parts of the country where large tracts of untilled land still remain and that ultimately a scientifically accurate method, capable of practical application in the classification of such land, can be worked out.

CORN INVESTIGATIONS.

One or more lines of corn-investigation work are in progress in thirty-two States under the immediate charge of Mr. Charles P. Hartley, Physiologist, assisted by Messrs. Ernest B. Brown, Curtis H. Kyle, and Dr. M. Norris Straughn. One line of these investigations has as its object the production by corn-breeding methods of high yielding and uniform strains for different localities and conditions. As the work extends, strains are improved and adapted to localities where the best possible yields are not now obtained, owing to the fact that in these localities no strains exist that are capable of giving the best results. At present corn breeding and demonstration work with twenty-five distinct strains is in progress in fourteen States.

RESULTS OF SEED SELECTION.—The work of the past year has resulted in very noticeable improvement in the twenty-five strains under test. Of the strains of field corn with which breeding work has been in progress since 1902 one has given an average annual increase of 24 per cent, another 46 per cent, and another 57 per cent. No fertilizers have been applied or extra cultivation given, and the increase in production is attributable to the breeding for greater producing power. A 10-acre breeding plot of one of these strains on rather poor upland soil and without fertilizer or extra cultivation produced, in 1902, 571

bushels; in 1903, 315 bushels; in 1904, 486 bushels; in 1905, 721 bushels; and in 1906, 840 bushels. In addition to an increased yielding power, these corns are yearly improving in characters of stalk and ear and are becoming more uniform.

CHOICE OF FOUNDATION STOCK FOR BREEDING WORK.—Tests of the grain-producing power of leading varieties of corn are in progress in twenty-eight States, for the most part in cooperation with State experiment stations. The tests precede the breeding and demonstration work and have as their object the determination of the strain or strains that are at present most productive, and consequently most worthy of breeding work for further improvement and adaptability. Series of variety tests of five years' duration are in progress. One of these tests with fourteen standard varieties in eighteen localities was completed in the summer of 1907. In these tests the seed planted at the various localities to which the varieties are suited is uniform, so that the results show not only the relative merits of the varieties in each locality, but the comparative adaptability of each to various sections.

DEMONSTRATION WORK.—In connection with the breeding of improved strains for different localities, general fields of these strains are grown, which demonstrate the adaptability and productiveness of the corn and serve as object lessons in the localities. Methods of culture and seed preservation are modified to suit the conditions of the different sections. These demonstrations awaken or stimulate an interest in larger yields per acre and greater profits to the producers.

EARLY VARIETIES OF CORN ON UNIRRIGATED LANDS.—During the past year it has been demonstrated that it is more profitable to grow corn in rotation with wheat on unirrigated land than to summer-fallow the land. In this work very early maturing varieties were planted early and were able to mature before the dry season became so severe as to prevent growth. The cultivation of the soil in growing the corn is of value to the wheat crop of the following year.

ADAPTATION OF CORN VARIETIES.—Observations in Texas and California indicate that the failure of the ears to properly fill with kernels may be due to the effect of hot, dry winds, resulting in severe cases in the tassels turning unnaturally white and failing to mature pollen. In milder cases the dry winds may cause a shedding of almost all the pollen before the silks appear. Varieties differ considerably in regard to the advancement of the silk at the time the pollen is discharged, thus making the choice of varieties for various conditions of much importance.

SWEET CORN FOR CANNING PURPOSES AND TABLE USE.—The improvement of strains of sweet corn for canning purposes is continued in cooperation with canning establishments. The good results of previous years' work showed plainly in the fall pack both in quality and in production per acre. In breeding for greater sugar content it has been determined that by careful tasting at the time the ears are in edible condition the sugar content can be determined to a degree that corresponds very satisfactory to chemical analyses of the same ears. It has also been determined that there is little or no correlation between the sugar content of ears in the edible stage and the sugar content of the same ears at maturity.

CHANGES PRODUCED BY ENVIRONMENT.—Environmental work having as its object the determination of effects of climate and soil upon the plants is in progress with both sweet and field corn. The sweet-corn work, in cooperation with the Bureau of Chemistry, is conducted at a series of points along the Atlantic coast from Florida to Maine and the field-corn work at a series of points from Texas to North Dakota. It is expected that this work will aid in solving some of the questionable matters in connection with corn improvement.

IMPORTED STRAINS.—Corns of various types from foreign countries are being tested in sections of the United States for which they seem most promising. Some strains from arid countries show more ability to produce grain under conditions of drought than the strains of our corn belt. Some of these are being improved and adapted to semi-arid conditions in the United States.

EXTENSION OF BREEDING WORK.—Next spring corn breeding and demonstration work is to be extended into the South Atlantic and Southern States. This work will be taken up with some of the strains that have averaged best in the test conducted during the past five years. The breeding of drought-resistant strains will receive more attention upon the plains and in California.

PRESERVATION OF SEED CORN.—In connection with the breeding and demonstration work, tests and demonstrations will be made of methods of storing seed corn to preserve its full vitality. In the South special attention will be given to methods of fumigation and storing to prevent injury from weevils and the grain moth. In the North methods of drying seed corn and preserving it in a dry condition will be demonstrated.

ASSISTANCE TO CORN BREEDERS.—To as great an extent as possible advice regarding methods of corn improvement and suitable varieties, seed for beginning corn breeding work, etc., are furnished those having a desire to breed improved strains of corn for their localities.

RECORDS OF CORN IMPROVEMENT.—The methods of corn improvement used by corn breeders and the characters and producing powers of varieties are studied so that valuable advice can be given regarding the best varieties for certain conditions and the sources from which good seed of such varieties can be procured. A record is kept of the origin, history, and characters of the leading strains of corn grown in the United States which gives credit to the originator and those who assist in the improvement.

MISCELLANEOUS BREEDING PROBLEMS.

Several special breeding problems are under investigation by this Bureau. Among these are the breeding of oats, the work being carried on by Mr. J. B. Norton, and the development of varieties of asparagus resistant to rust, these investigations being conducted by Mr. A. D. Shamel.

OAT BREEDING.—The work in the improvement of oats has progressed very satisfactorily in the past year. Headquarters are still maintained in central Illinois, but many of the best selections in hybrids have been tested in Iowa, Kentucky, Kansas, New York,

and Maryland. Several strains of hybrids proved their value in 1906 as good yielders, ranking with the best selected strains in spite of the fact that the samples used had not been reselected since the second hybrid generation. In 1907 yield tests were made of reselected hybrid stock.

Among the hybrids many desirable forms have originated from a cross between the Sixty-Day and Clydesdale varieties. These forms seem in general to be very well adapted to the region south of Wisconsin and Michigan and were among the best in the New York trials.

A cross between the Burt and Sixty-Day varieties has yielded a large number of very early strains that are resistant to smut, in this respect resembling the Burt parent, which has given several smut-free selections of great value.

The work with naked oat hybrids has been continued, and one strain of very superior merit has been produced and is being increased as fast as possible. It has very large grains and exceptionally stiff straw, standing upright when everything around it is lodged. For the last two years its yield has been nearly double that of the original naked variety. This new hybrid offers great possibilities as the basis for a new cereal food industry.

The work on smut-resistant strains is being continued and several more immune hybrids and selections have been found.

Simple breeding methods suitable for the ordinary farm-seed breeder have been perfected and a simple thrasher designed, suitable for the small plat work. This thrasher is very simple and offers no chance for seed of one variety to mix with that of another.

The work in oat breeding has already resulted in a number of select strains and valuable hybrids; however, there are still great possibilities in some of the new hybrid strains that are as yet unfixed. One or two years' work will give evidence of the possibilities of fixing some of these extremely desirable hybrids.

Among the unfixed hybrids are several types that will be of great value in the semiarid regions and also of value as spring varieties in the belt through the center of the United States where oats are not at all profitable. One of the most important strains still remaining unfixed is a hybrid between Garton's Tartar King and the Clydesdale varieties. This hybrid contains many types that will be exceptional yielders, and will be suitable for the general oat region in the north, but no yield tests have been made on account of the extreme variability in the most desirable strains. This variability is due to the fact that the Garton variety used as the seed parent was an unfixed hybrid.

ASPARAGUS-RUST WORK.—Experiments have been undertaken at Concord, Mass., under the direction of this Bureau in cooperation with the Massachusetts Experiment Station, to determine the rust resistance of different varieties of asparagus and to breed, if possible, rust-resistant strains of the best market varieties of asparagus. These experiments were begun at the request of the Massachusetts Asparagus Growers' Association and are being carried on on the farms of members of that association.

Seed has been secured from asparagus-growing sections in different parts of the world from those varieties which promise to be somewhat resistant to the rust. Seed from apparently resistant plants

in badly diseased fields has been saved and propagated to test the resistance to rust of the progeny of the parent plants. The plants from all of this seed are being grown in the rust-diseased area at Concord and under as nearly comparable conditions as it is possible to secure for them. It is too early at this time to draw any definite conclusions as to the rust resistance of any of these strains or varieties, but enough has been observed to show that there is a marked difference among the plants and strains in respect to this condition and to give a basis for the hope that resistant strains may be secured by continued effort along this line.

PLANT LIFE HISTORY INVESTIGATONS.

The Plant Life History Investigations of the Bureau are under the immediate charge of Mr. Walter T. Swingle, Physiologist, assisted by Mr. Charles J. Brand, Physiologist in Charge of Clover and Alfalfa Investigations, and by Prof. Silas C. Mason, Arboriculturist in Charge of Dry-Land Arboriculture.

These investigations have for their object the working out of the developmental stages and the climatic, soil, and cultural requirements of the principal crop plants, as well as their powers of resistance to unfavorable environmental conditions, in much the same way as has been done by physiologists in the case of bacteria, fungi, yeasts, and even for minute algæ of no economic importance.

LIFE-HISTORY INVESTIGATIONS OF THE DATE PALM.—During the past fiscal year a new date garden, directly under the control of this Bureau, has been established in cooperation with the Office of Seed and Plant Introduction at Indio, Cal. The land for the garden, some 10½ acres about a mile to the west of Indio, was donated to the Government in fee simple by Mr. Fred N. Johnson.

A cooperative date garden has just been established at Laredo, Tex., a tract comprising 10⅖ acres in the Rio Grande Valley, some 4 miles to the south of Laredo, having been leased to this Department by Mr. August C. Richter, with the privilege of renewal for ninety-nine years. The remarkably hot spring weather which prevails along the Rio Grande Valley from Laredo to Rio Grande City warrants the hope that it may prove possible to grow midseason dates and even some late varieties in this part of Texas. The cooperative garden has for its principal object the determination of just which varieties can be grown with most profit in this promising date region.

During the past fiscal year, cooperative experiments in starting seedling date orchards by planting seed of choice varieties have been undertaken on a large scale. Some 125,000 date seeds have been planted out in cooperation with growers in California, Arizona, and Texas. These growers will receive as a bonus from one to two offshoots of imported date palms for every 250 seedling dates set out in proper form. This bonus will just about protect the grower against loss, even though none of the seedlings should prove to be of superior quality. It is believed, however, that the fruit of many of these seedlings will be salable and that some few very choice varieties will be originated—varieties better adapted to our conditions than any which could be imported from the oases of the Old World's deserts. This constitutes the first extensive work in breeding dates that has

been undertaken in any country, and it is confidently believed that the date palm can be greatly improved by systematic selection and breeding.

During the past year, the famous Deglet Noor variety ripened for the first time without artificial heat in the Salton Basin in southern California. This gratifying result confirms the prediction made in 1901 that this variety, the choicest date that reaches the American and European markets, would prove adapted to the climate of the Salton Basin, although its success elsewhere in the United States is doubtful.

CLOVERS AND ALFALFAS.—Life-history investigations of clovers and alfalfas have been continued by Mr. Brand.

Hitherto the work on clovers has been confined largely to a study of the regional varieties of common red clover, including experiments with the new Orel clover (*Trifolium pratense foliosum* n. var.), but this has been broadened to include the study of numerous other species of Trifolium. The work with regional varieties is being continued on a smaller scale and particular attention is being devoted to putting the seed production of the Orel clover on a satisfactory basis. It is of interest to note that Prof. N. E. Hansen secured in Norway during his last exploring trip seed of a hardy variety of red clover called "Toten" clover, which resembles very strikingly the new Russian variety.

About thirty strains of European red clover, including among others the Steiermark, Silesian, Moravian, Bohemian, Italian, Thuringian, Austrian, English, Russian, and Polish, are being studied in cooperation with the Minnesota and Ohio experiment stations, and also with a private investigator in the humid coast region of northern California.

Experiments are also being inaugurated to determine the availability for cultivation of some of our wild native clovers. There are some seventy-five species of Trifolium native to the United States. Some of them grow with remarkable vigor and attain large size. Many also seed very freely, an important quality in cultivated plants. It is believed that several of these wild species may prove valuable for particular types of soil, climate, and methods of cultivation. An annual clover suitable for use in a short rotation is one of the most important needs of the agriculture of North Dakota, South Dakota, and Minnesota, regions where biennial and perennial leguminous forage plants often fail on account of winterkilling.

Experiments have also been started with shaftal (*Trifolium suaveolens* Willd.), a very promising annual clover which has long been cultivated in northwestern India, Afghanistan, and Persia, but had never been introduced into the United States until seed was recently obtained through the courtesy of Mr. Philip Parker, of the Indian irrigation service. Small experiments have been started in sixteen States, and observations already recorded show that this clover is doing well in localities as widely separated as Carlton, Oreg., and Danville, Va.; Yuma, Ariz.; Stockton, Kans., and St. Anthony Park, Minn. In the Asiatic regions mentioned, where shaftal is grown almost exclusively under irrigation, three, or even more, cuttings of hay are obtained each year, which is a remarkable showing for an annual hay crop. The plant is a rapid grower, cures readily,

makes fine hay, and is greedily eaten by horses and cattle. In the Himalayas shaftal grows in valleys having an altitude up to 8,000 feet; hence it is believed that it will have considerable frost resistance, which may greatly increase its usefulness in this country.

Alfalfa investigations are now being conducted in cooperation with about 60 private individuals and experiment stations, and at Yuma, Ariz.; Fallon, Nev., and San Antonio, Tex., in cooperation with the Western Agricultural Extension Investigations of this Bureau, of which Mr. C. S. Scofield is in charge. Numerous inoculation experiments are also being conducted in cooperation with the Laboratory of Soil Bacteriology of the Bureau of Plant Industry.

The most important result of the year is the discovery of a hitherto unsuspected point in the life history of a Peruvian strain of alfalfa. On account of its unusually low heat requirements it grows late in autumn and starts early in spring; it shows quick recovery after cutting, rapid growth throughout the summer and promises to yield one crop a year more than the common alfalfa. This strain is very distinct from all others and has been found to deserve recognition as a new botanical variety. A bulletin has been prepared describing it in detail.

The Peruvian alfalfa mentioned is suitable only for warm regions where irrigation is practiced, and in such sections should displace other varieties as soon as sufficient seed is available. In southern Arizona and the Salton Basin this strain grew throughout the past winter, while others known to be hardy practically ceased growing with the first frost of autumn. The ordinary Peruvian alfalfa is the least hardy of any and winterkills completely in northern regions. The new strain also gives evidence of being more resistant to alkali than the ordinary form. A thorough life-history study of this sort is being made and an effort put forth to learn methods of securing larger yields of seed in order to facilitate the spread of this valuable new alfalfa into practical culture.

In Montana, North Dakota, South Dakota, and Minnesota an effort is being made to find or develop varieties of sufficient hardiness to endure the severe northern winters. The physiological factors producing hardiness are also being studied. Of our domestic alfalfas, the Grimm from Minnesota and that from the Milk River Valley in northern Montana continue to hold the best record in the matter of hardiness. However, in the region around Chinook, in northern Montana, two strains from Turkestan are showing themselves to be almost, if not quite, as hardy.

The life-history investigations have progressed far enough to demonstrate that numerous races of alfalfa suitable for different climatic conditions and requiring varying methods of cultivation must be distinguished in practice, grown in different regions, and given different cultural treatement.

Dry-land arboriculture.—Since the last report, Prof. Silas C. Mason has been appointed Arboriculturist in Dry-Land Arboriculture, and has begun field work in Arizona and California with a view to finding deep-rooted and drought-resistant tree crops which can be grown along with ordinary crops where dry farming is practiced and which will flourish in regions where there is insufficient water for

irrigation. Such crops will not suffer from drought, as shallow-rooted plants do, and will yield crops even in very dry seasons.

DRY-LAND OLIVES.—In cooperation with Mr. Thomas H. Kearney, of this Bureau, investigations have been made on the Chemlali olive, which is grown extensively in southern Tunis, in a region where the rainfall is sometimes less than 7 inches per annum for several years and where the annual evaporation is over 100 inches—in other words, in a hot, dry, desert region where ordinary dry farming is very precarious.

These investigations have shown that these dry-land olives were once grown over a great region, covering a large part of southern Tunis and the central plateau of Algeria, a region noted in Roman times for its fertility and still covered with ruins of extensive cities which must have been supported almost exclusively by dry farming. It is believed that the dry-land olive is especially adapted to such extreme climatic conditions and that it is likely to thrive in certain parts of the United States.

In connection with the dry-land arboricultural reconnoissance made in central Arizona, an olive orchard was found which had remained alive for years without irrigation in a region where the rainfall was less than 6 inches per annum. In this orchard, which originally comprised several varieties of fruit trees in addition to the olive, not a single olive died; not a single fruit tree of any other kind lived. Steps are now being taken to establish experimental orchards in this part of Arizona, and plantations have already been started in Texas and California.

CHINESE DATE.—Investigations are now under way to determine the possibility of cultivating the Chinese date, which is being secured from China, in cooperation with the Office of Seed and Plant Introduction. This Chinese date is an improved graft-propagated variety of a species of Zizyphus, allied to the Old World jujube, but growing to a larger size and suitable for use as a dried fruit. The tree is able to withstand much more cold than the date palm, and it is hoped that it may prove of some value in parts of Oregon, Idaho, Utah, and Colorado where it is too cold for the date palm or the pistache.

FIGS AND CAPRIFIGS.—During the last fiscal year an investigation was conducted in California of the life history of the so-called Smyrna figs and the caprifigs which support the fig insect. To maintain an adequate supply of fig insects, it will be necessary to have a proper assortment of varieties of the caprifig, and for some years past this Office has been securing by introduction and breeding the best types of caprifigs. Already one new seedling caprifig has been found which is of the greatest promise, and experiments are under way to test its value in practical Smyrna fig culture in California. Fig-breeding work is being carried on on a large scale, now that it has been found a relatively easy matter to secure new varieties of figs of the Smyrna type equal to, if not better than, any which have been imported from the Old World.

THE PISTACHE NUT.—The investigations on the life history of the pistache nut looking to the establishment of pistache culture on a commercial scale in this country have been continued, and during the

past year some 5,000 pistache stocks two to three years old have been distributed in cooperation with the Office of Seed and Plant Introduction of this Bureau, from the Plant Introduction Garden at Chico, Cal., to settlers in Utah, Oregon, Nevada, California, Arizona, New Mexico, and Texas, and arrangements are being made to supply scions of imported varieties for grafting these stocks when they get large enough. Some of these stocks are drought-resistant species and some are hardy.

A very interesting new species allied to the cultivated pistache has been found growing abundantly near the mouth of the Pecos River in Texas, and this tree may prove adapted for use as a stock on which to graft commercial varieties.

THE BREEDING OF HARDY CITRUS FRUITS AND LIFE-HISTORY INVESTIGATIONS OF CITRUS FRUITS.—The work on breeding hardy citrus fruits, begun in 1894 at Eustis, Fla., in conjunction with Dr. H. J. Webber, has been taken up again and will be pushed as rapidly as the available funds will permit. The results already obtained, published in the Yearbooks of the Department of Agriculture for 1904, 1905, and 1906, show that many of these citranges, as they are called, are likely to prove of great value in regions having a mild winter climate but nevertheless too cold for the culture of other citrus fruits.

These citranges are really a substitute for lemons rather than oranges, and are likely to prove especially useful in the dry, hot valleys of Texas, New Mexico, Arizona, southern Utah, southern Nevada, California, and in Oregon and Washington, since in many of these regions lemons, even from California, are very expensive and difficult to obtain, as they are shipped through in carload lots in cold storage and are difficult to obtain at many of the intermediate points. It is in just such hot, dry regions that citranges are likely to prove most useful.

Through a study of the life-history requirements of citrus fruits it is believed that a new method has been found of obtaining oranges hardier than any now cultivated, and experiments are under way to test the truth of this theory. About 1,000 seedlings have already been planted in the hope of securing an orange able to resist spells of hot weather in winter, which are particularly dangerous, since they cause the trees to push out new growth and render them liable to injury from the next succeeding frost.

An effort is also being made, in cooperation with the Office of Seed and Plant Introduction, to secure new and especially hardy types of citrus fruits from China and Japan, which it is hoped will enable us to breed hardier citranges, and perhaps hardier oranges.

EXPERIMENTS IN ELECTRO-CULTURE.—For some years past accounts have been published of experiments in treating crop plants with high-tension electricity, whereby decidedly increased yields and in some cases greater earliness of maturity were obtained.

In the most widely published experiments the electric current was applied from a network of overhead wires stretched between posts and suspended from 6 to 8 feet above the ground, this network of wires being charged with electricity of very high tension from a frictional electrical machine.

Experiments have been undertaken in order to determine whether any increased yield or hastening of maturity results from such treatments, principally with the idea of obtaining information to enable the Bureau of Plant Industry to answer requests for information on this subject rather than in the hope of finding such treatments as would be practicable and feasible in ordinary commercial practice. These experiments will be continued until some definite results are obtained. In this way market gardeners and others engaged in intensive cultures will be protected against any chance of loss through unfounded representations which might be made by unscrupulous parties interested in the sale of electrical machines or patent rights for electrical treatments. These experiments are being conducted in cooperation with the Physical Laboratory of this Bureau.

IMPROVEMENTS IN HIGH-POWER MICROSCOPES.—Incidental to the other work of the Laboratory of Plant Life History, a number of improvements have been made in high-power microscopes that are likely to prove of interest in all laboratories where very minute objects are studied.

In the first place, the once famous monobromide-of-napthaline immersion objective, having the highest resolving power of any visual microscope, has been thoroughly tested and found to be invaluable for the study of very minute organisms or of the equally minute organs of larger cells. This remarkable microscopic objective was made by Abbe in 1889, but can not be said to have ever come into use, owing to the great difficulties of manipulation. These difficulties have largely been overcome through the discovery of suitable mounting media, which has made it possible to utilize the great resolving power of this objective in the study of ordinary stained objects. Moreover, it was discovered that this objective can be used to great advantage in the study of ordinary permanent mounts if the mounting medium and cover glass be dissolved off and the object remounted (without restaining) in one of the new mounting media and covered with the special flint-glass cover needed in using this objective. In this way the expense and trouble of making special mounts on flint-glass slides is avoided and the best half dozen slides resulting from a season's work may be remounted on the ordinary glass slide with flint covers for critical study with the napthrobrom immersion objective. Aside from its extremely short working distance and the expensiveness of the flint-glass covers, this objective is as easily used as an ordinary oil immersion, to which it has greatly superior resolving power.

A number of new microscopic objectives, even superior to the napthrobrom immersion, have been invented, and the constituent lenses for two of these are now being calculated with a view to constructing a trial objective of each.

In cooperation with the Physical Laboratory of this Bureau improvements have been made in the ultraviolet microscope which render it a very convenient and practical instrument for microscopic work requiring the very highest resolving powers, where the results can be recorded by photomicrographs. The ultraviolet microscope has nearly twice the resolving power of an ordinary oil-immersion lens and about a third more than even the napthrobrom-immersion lens.

BIONOMIC INVESTIGATIONS OF TROPICAL AND SUBTROPICAL PLANTS.

These investigations are under the charge of Mr. O. F. Cook, Bionomist, assisted by Mr. G. N. Collins. Field experiments with weevil-resisting cotton varieties are conducted by Mr. F. L. Lewton. Studies of corn varieties in tropical America are being made by Prof. H. Pittier.

WEEVIL-RESISTANT CENTRAL-AMERICAN COTTONS IN THE UNITED STATES.—The results of last year's experiments are very encouraging. The first and second generations of plants raised from Texas-grown seed show a notable return toward the normal form and habits of the variety, including the weevil-resisting characters, such as dwarf stature, early fruiting, long basal branches, closed squares, and proliferation of internal tissues. When first introduced into the United States nearly all of these Central-American cottons behave abnormally because of the unusually favorable conditions. Nearly all of them made very rank growth and were much less fertile than in Guatemala; some became almost completely sterile. This excessive stimulation or new-place effect is diminishing each year as a result of acclimatization.

One of the Mexican varieties has already shown itself much more prolific in the presence of the boll weevil than any of our native Upland types. Many of the imported kinds have large bolls and lint of excellent quality.

An expedition to southern Mexico resulted in the discovery of two distinct types of cotton culture on a commercial scale in the State of Chiapas, where the boll weevils are generally very abundant. In one district injury from the weevil was avoided by the native custom of planting cotton only in alternate years. This holds the weevils so well in check that they inflict practically no injury, though the conditions are otherwise quite as favorable for the weevils as in the cotton belt of our Southern States. It is thus apparent that in localities where other methods of combating the weevil can not be applied it may still be practicable to produce cotton commercially in alternate years when the whole community adopts this practice.

In another district of Chiapas profitable crops of cotton were secured each year through the protection afforded by one of the adaptive characteristics of the native variety. Most of the bolls are produced on very large basal branches where the weevils do not find them, their instinct leading them to confine their work to the top of the plants, where the buds of most of the varieties are to be found. There was also found in Chiapas a cotton of the Upland type with larger bolls than any previously known.

The field operations for the season of 1907 consist of comparative plantings of these weevil-resistant Central American types of cotton in numerous localities in Texas and neighboring States to test their adaptability and acclimatize them to United States conditions as well as to permit improvements to be made by selection and hybridization.

DROUGHT RESISTANCE IN COTTON.—Many high-grade varieties of cotton exist in Central and South America which show notable ability to withstand drought in addition to hardiness, earliness, and other desirable qualities. By means of such varieties it will be possible to

extend cotton culture into the arid regions of the Southwest where cotton is not now grown, particularly in southern and western Texas and in Oklahoma and Kansas. In sufficiently dry climates the crop is not endangered by weevils, and cultivation is less expensive. The depredations of the boll weevil and the rapid increase in the cost of farm labor are likely to encourage an expansion of cotton culture toward the North and West, not to supplant other products but as an element of mixed farming. To the extent that the farmer's family can harvest the crop the growing of cotton is very profitable at present prices, for the light labor of women and children can be used to greater advantage in harvesting than in almost any other kind of outdoor work.

With a view to securing additional drought-resistant varieties it will be desirable to visit the drier parts of Mexico, where cotton culture is practiced and where the weevils are excluded by drought.

INDIAN CORN.—The acclimatization of new varieties of corn from the Central American region was begun last year. The range of conditions under which corn is grown in Central America appears to be much greater than in the United States. The numerous local varieties are highly specialized to local conditions of moisture, drought, or high altitude. Some of the varieties show several adaptive characters, such as thickened stalks for the storing of water, closely wrapped leaf sheaths, retaining the moisture collected from dew and light rains, and elongated and thickened husks that protect the ear against the corn worm. Preliminary plantings made last year at San Antonio, Tex., and in Maryland brought out the fact that with corn as with cotton most varieties behave very abnormally when placed under new conditions. A considerable series of varieties for this year's planting has been secured from Mexico, Guatemala, Honduras, Salvador, Costa Rica, Nicaragua, and the United States of Colombia, and their cultural factors studied in their native localities. Many of these were found growing without irrigation in extremely dry districts and promise to be of value in the arid regions of the Southwest if they become sufficiently acclimatized. Experiments of this kind are being conducted at eight points in the West and Southwest, and about one hundred of the imported varieties are under observation.

A careful study is being made of the relations between the physical characters of the varieties and their suitability to particular cultural conditions. In this way it may become possible to establish an agricultural classification of varieties, based on the characters that adapt them to the various climatic conditions under which they have been developed. A classification of this sort will materially assist in placing the introduction and acclimatization of these varieties on a scientific footing.

RUBBER.—Some of the older plantations of Chiapas and Tabasco, Mexico, are quite extensive and have been producing rubber for a number of years. Visits to such plantations have afforded additional evidence of the practicability of securing considerable quantities of rubber from planted trees, but they also supply an additional reason for caution in enterprises based on the Central American rubber tree, for it is being found that the bark in the proximity of old cuts yields very little latex, so that the profits still remain uncertain. The rub-

ber-forming materials of the latex are restored only slowly, if at all. The first cuts yield much more latex than in the Para rubber tree, but there is no such persistent production of latex nor any repeated flow to be obtained by paring back the edges of wounds which produce in the Para rubber tree more latex than the previously uninjured bark.

The effects of destroying the forest conditions and of exposing the soil to the sun and to the washing of the rains is shown in the backward condition of plantations on the Isthmus of Tehuantepec. Unless the soil is unusually fertile and well watered, the trees maintain a more rapid growth when they have the advantage of a surface mulch afforded by a partial or gradual clearing away of the forest.

The latex of Castilla is also quite different from that of the Para rubber tree, and requires different methods of treatment. With slow coagulation the quality of the product deteriorates. Exposure of the latex to air and sunlight by spreading it out in thin layers produces better and more durable rubber than bulk coagulation, even with the thorough and repeated washings which are now generally advised.

SOIL BACTERIOLOGY AND WATER PURIFICATION INVESTIGATIONS.

The soil bacteriology and water purification investigations of the Bureau are under the immediate charge of Mr. Karl F. Kellerman, Physiologist, who reports on the progress of the various lines of work as follows:

SOIL BACTERIOLOGY INVESTIGATIONS.

DISTRIBUTION OF NODULE-FORMING BACTERIA.—The distribution of cultures of nodule-forming bacteria suitable for various legumes has been continued and some additional modifications of the method have been put in practice. The most important of these, perhaps, is the occasional distribution of large cultures which are to be used at once either with or without dilution. The tabulation of reports of this season's crops has not been completed, but at the present time it appears that successes have been much more general than heretofore and that the unexplained failures are comparatively few. Certain experiments have been undertaken to determine the influence of different types of soil upon these bacteria, and Bulletin No. 100, Part VIII, of the Bureau of Plant Industry gives a partial report upon this subject. Further investigations are being carried on to determine the ability of these bacteria to become accommodated to soil conditions that ordinarily would prove unfavorable. The cooperative tests with Prof. C. V. Piper in Maryland, Mr. T. H. Kearney in the West, the Ohio Experiment Station, and the Missouri Experiment Station will probably be continued.

BACTERIA IN RELATION TO SOIL FERTILITY.—It is planned to compare the bacterial floras of cultivated and uncultivated fields in various parts of the United States and as far as possible correlate the different kinds of bacteria, their relative numbers, and their physiological reactions with the successful production of crops. Work has been undertaken in the Great Plains area during the past two years, and during 1907 further experiments will be inaugurated in Virginia and Florida and possibly at other points in the West. Our preliminary

experiments indicate that it is possible to inhibit or enhance bacterial activity by various methods of soil manipulations, and that in certain soils, at least, the success of any crop is largely dependent upon what type of bacteria is encouraged to develop.

WATER PURIFICATION INVESTIGATIONS.

ERADICATION OF ALGÆ BY COPPER SULPHATE.—The copper method of eradicating algæ from reservoirs is in almost constant use in this country, and last year our investigations were extended to include the study and treatment of the reservoirs of the Canal Zone on the Isthmus of Panama. The results of this work were presented before the National Academy of Sciences at the Washington meeting. Briefly a few forms were found in the Canal Zone reservoirs that generally grow luxuriantly in this country also, although the odors and tastes complained of in Panama seemed to result from forms which in this country give but little trouble, while the forms which in this country would be objectionable, in Panama seemed but slightly obnoxious. Treatment with copper sulphate resulted very satisfactorily both from the standpoint of taste and the appearance of the water. This improvement was brought about by the use of exceedingly minute quantities of copper sulphate. As the study of tropical waters has never been taken up systematically, and as at the present time there seems considerable reason for more extended knowledge upon the quality and behavior of water in the Tropics, it is planned to establish a temporary laboratory in the Canal Zone, the expenses of which will be borne by the Isthmian Canal Commission, although the laboratory will remain in the closest possible relations with this Bureau.

USE OF COPPER SULPHATE AND CHLORIN IN DISINFECTING SEWAGE.—Rather extensive experiments have been carried on in cooperation with the officials of the State board of health of Ohio to determine the practicability of using copper sulphate or chlorin compounds for disinfecting sewage, which might otherwise prove very dangerous to the consumers of a water supply. It has been found possible to disinfect thoroughly and economically considerable quantities of sewage, either by the use of copper sulphate or calcium hypochlorite. The latter, while more effective if properly used, is more disagreeable to handle and requires more attention than copper sulphate. A bulletin has been issued giving in some detail the results of our investigations in Ohio and presenting also some careful estimates upon the probable cost of disinfecting sewage. This method is advisable only as an auxiliary or additional safeguard where the sewage of one community so grossly contaminates the water which must be used as a source of supply by a second community that the standard methods of water purification by filtration are inadequate.

INVESTIGATIONS IN POMOLOGY.

The pomological investigations are grouped under two main heads: (1) Studies of pomological collections, in charge of Col. G. B. Brackett, and (2) field investigations relating to the culture, marketing, transportation, and storage of fruits, conducted under the direction of Messrs. William A. Taylor and G. Harold Powell.

POMOLOGICAL COLLECTIONS.

Under the Pomologist, Col. G. B. Brackett, cooperation with orchardists has been maintained and information has been furnished to thousands of inquirers relative to orchard sites, varietal plantings, and other matters pertaining to fruit culture.

SIMPLIFICATION OF FRUIT NOMENCLATURE.—This work has for its object the placing of fruit culture on a stable basis as to its terminology. A bulletin on the nomenclature of the pear is in preparation, following closely the lines of Bulletin No. 56 of this Bureau, entitled "Nomenclature of the Apple."

IDENTIFICATION OF FRUITS.—The fruits submitted for identification during the year aggregated 1,594 varieties. During the year 307 water-color paintings of deciduous and citrus fruits were made, many of which were from rare fruits which have hitherto been difficult to obtain. Illustrations showing the progress of fruit diseases have also been made in cooperation with the pathological workers of the Bureau. More than 1,200 models of fruits have been repaired and retouched for use at the Jamestown Tercentennial Exposition.

COOPERATIVE EXPERIMENTAL ORCHARD.—On the Arlington Experimental Farm careful trials have been made of varieties of deciduous fruits, and notes on their behavior have been taken for comparison with the record of the same varieties in other sections of the country. When a variety has been found worthy of dissemination it has been recommended for planting elsewhere under like conditions. Well-established varieties are also given careful trial for comparison with other varieties of known value. By means of segregation and selection it is possible to recommend many better varieties than were formerly grown. On the experimental area are 18 acres in apple orchard, 7 acres in peaches, and a smaller area devoted to a miscellaneous collection of small fruits. More than 1,000 varieties of deciduous fruits are now being tested on the farm, of which 185 varieties were added during the past year.

DISTRIBUTION OF VARIETIES.—Altogether, 249 varieties of fruits were collected and distributed from this office to thirty-five State experiment stations and forty-five private experimenters. By this method it is hoped to correct disputed nomenclature, to determine the relative value of varieties as well as their adaptability, and to disseminate choice sorts to the various sections of the country.

FIELD INVESTIGATIONS IN POMOLOGY.

The field investigations of cultural, marketing, transportation, and storage problems involving fruits have continued under the direction of Messrs. William A. Taylor and G. Harold Powell, pomologists in charge. The general lines mentioned a year ago have been followed as closely as practicable, although changes in crop conditions, due to unforeseen climatic influences, have caused modification in some important particulars. Problems involved in the preparation of fruit for, and its handling in, long-distance transportation continue to receive such attention as is warranted by their commercial importance to the fruit-growing industry, as well as to the transportation, warehousing, and other industries.

FRUIT MARKETING.

The investigations in fruit marketing have continued under the personal direction of Mr. William A. Taylor, with whom have been associated Mr. G. Harold Powell and Mr. G. W. Hosford.

SCOPE OF THE YEAR'S WORK.—Principal attention was given during the year to studies of methods of packing and handling winter apples, with special reference to their shipment to foreign countries. The general trend of the fruit export trade continues fairly favorable to American shippers. Its encouragement is considered of great importance to our fruit industry, as it affords a profitable outlet for a surplus product in years of full crops. Experimental work along the same lines was contemplated with several fruits, especially summer apples, peaches, and certain subtropical fruits, but was prevented by short crops and unfavorable climatic conditions.

EXPORT TRADE IN WINTER APPLES.—Investigation of foreign sales catalogues, covering more than 100,000 barrels of standard winter varieties of apples shipped from various American ports, in which the condition of the fruit was reported at the time of arrival in the Liverpool market, indicates that more than 20 per cent of such shipments are classed as "slack" or otherwise than "tight" when offered for sale. The known factors involved are insufficient shaking of the barrels in packing, insufficient filling of the barrels, overripeness at harvest, undue exposure to high temperatures after packing, either in the orchard or in transit, and probably careless and rough handling of the fruit before it is in the package.

COOPERATIVE SHIPMENTS.—Cooperative experimental shipments from Virginia and Illinois orchards have again failed to disclose any commercial advantage resulting from the separation of the ordinary No. 1 grade of such varieties of apples as Ben Davis, York Imperial, and Winesap into two sizes of fruit packed in separate packages. In most instances the prices realized for the two grades separately were, in fact, somewhat less than for the same grades combined in one. The question is one of much importance in formulating grade standards applicable to apples in barrels.

FRUIT TRANSPORTATION AND STORAGE.

The investigations of the transportation and storage of fruits have been conducted during the past year, as heretofore, by Mr. G. Harold Powell, Pomologist in Charge, who has been assisted by Messrs. A. V. Stubenrauch, L. S. Tenny, H. J. Eustace, S. J. Dennis, G. W. Hosford, and H. M. White. The transportation investigations have been confined chiefly to the citrus-fruit industry of California, but some work in Florida has also been conducted.

CALIFORNIA ORANGES.—The investigation of the causes of decay in oranges in transit from California were continued under the personal direction of Mr. Powell. The work was divided into four general lines, as follows: (1) The decay in oranges handled in different ways and held two weeks in the packing houses in southern California. These experiments were duplicated in 31 packing houses in the principal parts of the citrus belt, and were in the nature of demonstrations to the growers and packers of the effect on its ultimate

keeping quality of handling the fruit in different ways. (2) The decay on arrival in the market of fruit handled in different ways and shipped under ventilation, under ice, and after precooling followed by standard icing, the fruit going forward at different lengths of time after packing. Nearly 200 shipments were made in these tests. (3) The keeping quality in the market of fruit handled in different ways and shipped under ventilation, under ice, and after precooling followed by icing. (4) Technical studies of temperature changes in fruit in refrigerator cars in transit and technical engineering studies of methods of cooling fruit for shipment.

PACKING-HOUSE EXPERIMENTS.—The packing-house experiments, which were conducted by Messrs. Stubenrauch, Eustace, Hosford, and White, were most effective in demonstrating to groups of growers and shippers the difference in the keeping quality of oranges handled in various commercial ways. As a result of nearly 100 tests, sound unbrushed fruit developed an average of 2.9 per cent decay; sound brushed fruit 6.6 per cent; washed fruit, 17.8 per cent, and mechanically injured fruit, 40.1 per cent. These experiments have been followed by a widespread effort to handle the fruit so as to reduce the injury that previously occurred, to remodel complicated packing houses with more simple machinery, and to combat the black scale on the trees so as to eliminate the necessity for washing the fruit.

SHIPPING TESTS.—In the shipping tests the fruit was packed under the direction of the Bureau representatives. It was forwarded to New York, where the decay was determined under the direction of Mr. Tenny by the inspection of every orange included in the shipment. Summarizing the results obtained from all of the shipments, it has been proved that sound, uninjured fruit is the foundation for successful keeping quality under all methods and conditions of handling. Carefully handled fruit developed the least decay, while oranges injured mechanically in handling developed the most. Based on the length of time the fruit is packed before shipment, the decay increased in proportion as the time increased. Quick shipment after packing is another fundamental requirement for the successful keeping of the fruit in shipment. Based on the method of shipment, the least decay developed in the fruit that left California in the coldest condition. Sound fruit handled with enough care to prevent injury and shipped quickly after picking and packing, in the coolest possible condition, summarizes the fundamental requirements for the successful keeping of the orange during shipment. If the fruit has been injured in picking or in the packing house, then quick shipment at a cold temperature is essential, but sound fruit can be delayed and shipped in a comparatively warm condition with small loss.

KEEPING QUALITY IN THE MARKET.—The keeping of the fruit on arrival in the market depends primarily on the oranges being sound before it is shipped. Unsound fruit may arrive in market in apparently sound condition if shipped quickly after packing in a cold condition, but the decay has only been retarded. It has been transferred to the receiver, and unless the fruit is used quickly the rot develops as soon as the fruit warms up. There appears to be little difference in the keeping quality of sound oranges when shipped under ventilation, under ice, or after precooling.

TEMPERATURE CHANGES.—In the investigation of temperature changes in the fruit and in the interior of the cars, several trips were made from California to New York by Messrs. Hosford and White. Through the cooperation of the railroads it was possible to have a number of thermometers inserted among the packages of fruit and in the air of cars shipped under ventilation, under ice, and after precooling. Records of the thermometer readings were made several times a day. In this way data were secured which will be mutually helpful to the growers, shippers, and transportation companies.

Under the direction of Mr. Dennis a plant was erected in connection with a cold-storage warehouse at Los Angeles to secure engineering data on the practicability of cooling the oranges after loading in the cars by blowing a large volume of cold air through the cars. An investigation of other methods of cooling fruit is under way, and the data will be equally useful to shippers, warehousemen, railroads, and engineers.

RESULTS OF THE WORK IN CALIFORNIA.—The California work continues to have the heartiest support of all interested directly or indirectly in the citrus-fruit business. As a result of the investigations of this Bureau the methods of handling the crop in the groves, in packing houses, and while in transportation are being changed in many respects, and it has been estimated by those vitally interested in the industry that the improvements already effected have resulted in an annual net increase to the industry of from one-half million to one million dollars.

WORK ON FLORIDA ORANGES.—A preliminary investigation of the causes of the losses in Florida oranges was made during the year by Mr. Tenny, assisted by Mr. White. The rough mechanical handling of the fruit, as in the California industry, appears to be one of the principal causes of the trouble, coupled with a poorly developed system of handling a perishable product in transit. The losses during the months of November, December, and January are severe, and there is good reason to feel that the work of the Bureau will show how these losses may be overcome. This work has the hearty cooperation of those interested in the Florida citrus-fruit industry.

FRUIT-STORAGE INVESTIGATIONS.—A preliminary investigation of methods of handling peaches, pears, and table grapes for cold storage was begun in California, and the California apple-storage work has been continued, these lines of work being under the immediate direction of Mr. Stubenrauch. In the work on table grapes it was found that the molds which cause the principal losses both in storage and in transit gain entrance to the fruit usually through cracks in the skin at the pedicel. These injuries are caused by the careless handling of the fruit. The molds grow slowly even at a temperature of 32° F. A number of varieties of the several fruits mentioned were stored, and this fruit was handled under different conditions and stored in different packages and packing material. It is expected that this investigation will determine the principles that govern the successful handling of the California table grape for storage and for transportation.

In cooperation with the Iowa State College, the fruit-storage work of the Bureau has been extended to Iowa to determine the principles that govern the handling of apples in that section of the country for

cold-storage purposes. This work is under the direction of Mr. Eustace. The cooperative work on the effect of the sod and tillage treatments have been continued with the New York State experiment station, and more detailed investigation has been made of the farm-storage problem.

VITICULTURAL INVESTIGATIONS.

The grape investigations have continued under the direction of Mr. George C. Husmann, Pomologist, assisted during portions of the year by Messrs. Andrew Rasmussen, F. L. Husmann, Alfred Tournier, and E. F. Cole. As in previous years, distributions of vines and cuttings have been made to experimenters in the United States and its insular possessions, while exchanges of varieties have been made with experimenters in several foreign countries. The amount of correspondence on viticultural subjects steadily increases and the demand for information on the grapevine, its fruit, and its uses indicates a general increase of interest in viticulture throughout the country.

COOPERATIVE VINEYARDS.—The Pacific coast investigations have been mainly in the cooperative experimental vineyards established and maintained for that purpose, and the value of these plantings is increasingly apparent. In the new experimental vineyard at Stockton, Cal., which was established during the past spring, 10 vines each of 73 resistant varieties were planted. At each of the 10 other vineyards additional varieties have been planted, including an introduction of 35 new direct producers from the French collections. Soil samples from each of the experimental vineyards were furnished to the Bureau of Soils for examination and correlation with the general soil types of the State, and in cooperation with that Bureau a survey of the soils of the vineyard areas of California has been begun.

At the Oakville and Fresno vineyards such resistant varieties as have shown indication of superiority in the preliminary tests have been more largely planted, in order to afford a broader opportunity for observation and for more decisive tests. The congeniality tests of Vinifera varieties to resistant stocks have been increased by the grafting of additional varieties on representative stocks. Additional varieties of promising new Viniferas to the number of 57 have been introduced and grafted on resistant stocks in the Oakville vineyard for fruiting tests.

In addition to data obtained in the experimental vineyards and elsewhere on the adaptability of both resistant stocks and Vinifera varieties to special conditions, detailed fruit descriptions of 113 Vinifera varieties grown on resistant stocks were made, many of which had not previously been fruited in this country. Descriptions of a number of promising direct producers were also made. Saccharine and acid tests of the fruit of 104 varieties were made, while authentic seed samples and photographs of fruit of a large number of varieties were secured.

Accurate observations of the phenomena of growth of varieties were recorded, together with records of the important vineyard operations and of temperature and rainfall at the vineyards. As these collections now comprise about 400 Vinifera varieties and 268 resistant stock and direct producing sorts, these records of varietal

behavior under known conditions are considered of much importance.

WORK AT CHICO, CAL.—At the plant introduction garden at Chico, Cal., rooting tests of 215 resistant stocks have been made, as well as an extensive nursery-grafting experiment in which a test of the congeniality of 38 Vinifera varieties of 40 resistant stocks was begun. A collection of 57 varieties of newly introduced table grapes from France was bench-grafted and placed in the nursery for propagation. Photographs showing the root systems of 47 resistant varieties were taken. The varietal vineyard at the Chico garden now contains 157 selected varieties of resistant stocks and direct producers.

ROTUNDIFOLIA GRAPES.—In the Rotundifolia investigations the field survey and study of the early cultural history of the species have been continued by Mr. Cole. Pollinating and propagating experiments and botanical studies have also been prosecuted. Arrangements have been completed by which the promising varieties of this species are being assembled as discovered, and these will be planted in a cooperative experimental vineyard on the Pender farm of the North Carolina department of agriculture, near Willard, N. C. Fifteen acres of land have been reserved for this purpose, the work there being under the joint direction of the Pomologist in Charge of Viticultural Investigations and of Prof. W. N. Hutt, State horticulturist. A planting of the 6 leading commercial Rotundifolia varieties for a test of methods of trellising and pruning has already been made in the cooperative vineyard.

A fairly comprehensive series of pollination experiments in Florida, South Carolina, and North Carolina during the spring of 1907 indicates that the fruiting varieties of the Rotundifolia species are selfsterile, or nearly so, and that their pollen is also ineffective upon other fruiting varieties of the species. Blossoms cross-pollinated from various staminate vines of the species show a high percentage of fruits set, however, indicating the importance of having staminate vines of the species in the vicinity of the vineyard, if not actually within it. The pollen of certain fruiting varieties of other species grown in the Rotundifolia territory appears to be effective on these fruiting varieties also.

FRUIT DISTRICT INVESTIGATIONS.

The fruit district investigations have continued, as heretofore, in charge of Mr. H. P. Gould, Assistant Pomologist, assisted by Mr. W. F. Fletcher. The nature of the work is such as to require close observation and accurate records of conditions through several seasons before safe generalizations are possible. Incidental to the other lines of work, a field study of methods and equipment for evaporating apples was made, the results of which have been published in Farmers' Bulletin No. 291.

ADAPTABILITY OF APPLES.—During the year special attention has been given to a field study of the relative adaptability of varieties of early apples to culture in the Middle Atlantic States from New Jersey to tidewater North Carolina, with a view to ascertaining the approximate area within which their commercial planting is likely to be attended with profit. Sufficient data are now at hand to complete

a report on the subject for publication. The most important work along this line during the year was a fairly thorough survey of orchard conditions in the Missouri and Arkansas portions of the Ozark region, with incidental study of adjacent portions of Oklahoma, including the Indian Territory. A preliminary survey of orchard conditions in the Cumberland and Shenandoah valleys in Tennessee and Virginia was also made.

PHENOLOGICAL INVESTIGATIONS.—The phenological investigations, in connection with which several hundred fruit growers are cooperating with the Bureau in making and recording observations on the important phenomena of tree growth, such as dates of blossoming, of ripening of fruit, of cessation of growth, etc., of fruit trees in various parts of the country, have proceeded in a systematic way during several years past. Cross-pollination studies of certain important commercial varieties of apples have been repeated in the Shenandoah Valley to secure information on the still unsettled question of the extent to which our staple varieties of apples require cross-pollination to insure productiveness. Similar work on peach varieties was rendered of little value by unfavorable weather conditions at the blossoming period.

PLANS FOR FUTURE WORK.

The work of the ensuing year in field investigations in pomology is expected to follow the general lines laid down for the past year, which are briefly summarized in the following paragraphs:

FRUIT MARKETING.—In the fruit-marketing work it is planned to continue the studies of apple grading and packing with reference to their relation to the behavior of the fruit previous to and in ocean transit, while an experimental investigation of the practicability of exporting early apples, peaches, pineapples, and pomelos is also contemplated. It is expected that suitable cooling equipment, which has long been needed in this work, will be available.

FRUIT TRANSPORTATION AND STORAGE.—A continuation of the lines of work already under way is contemplated, including the investigation of the storage and transportation problems of the Pacific coast, the citrus work in Florida, the cooperative work in fruit storage with the New York State Experiment Station and the Iowa State College, and the study of the chemical changes which take place in stored fruit, the latter phase in cooperation with the Bureau of Chemistry. An extension of the fruit-storage work to citrus fruits is planned, and a portable refrigerating plant is being constructed, which will make it possible to conduct investigations in various parts of the country in the handling of fruits and vegetables for transportation.

VITICULTURAL INVESTIGATIONS.—In the grape investigations on the Pacific coast the work upon the various problems already under way will be continued. As many of the varieties in the experimental vineyards have attained bearing age, these are expected to yield additional data on the adaptability of varieties to special uses, on the growth and fruiting characteristics of Viniferas on resistant stocks, and on the growth and fruiting of direct producers. The rooted cut-

tings resulting from the propagation experiments in the nursery at the Plant Introduction Garden at Chico, Cal., will be utilized in experimental distribution and for additional plantings in the experimental vineyards.

In the Rotundifolia investigations the thirty varieties previously located in field surveys, of which plants are being grown at the Arlington Experimental Farm, are to be planted and grown for comparison and study in the cooperative vineyard near Willard, N. C. The other experiments already commenced are to be continued and new ones taken up in connection with them.

FRUIT DISTRICT INVESTIGATIONS.—The studies of the varietal adaptability of orchard fruits in the Ozark region will be continued during the present season, the crop conditions there being considered fairly favorable for such work. The work in the Shenandoah Valley will also be continued. Urgent call from farmers and fruit growers for more complete information regarding methods of orcharding adapted to the drier portions of the West renders it important that some investigation of orchard management in that region be undertaken. Systematic cooperative testing of certain varieties in representative localities to determine their relative reaction to definite conditions of soil, temperature, humidity, and other factors is also contemplated through members of the corps of observers already cooperating in phenological work. Incidental to other lines, a field study of methods of fruit canning and cider making on farms is also under way.

PECAN STUDIES.—The systematic prosecution of studies of the varietal adaptability of pecans to the soils and climatic conditions of the Southern States, including the effect of cross-pollination on quantity and quality of crop and numerous other features of this industry, which is assuming large importance, is contemplated.

THE ARLINGTON EXPERIMENTAL FARM.

Many problems of a general nature connected with crop growth and crop conditions are being worked out at the Arlington Experimental Farm, which is in charge of Prof. L. C. Corbett, some of the principal lines of work carried on there being outlined below.

INVESTIGATIONS CONDUCTED BY VARIOUS BUREAUS.—The Bureau of Forestry maintains an osier willow plantation devoted to cultural and variety test work.

The Bureau of Entomology maintains an orchard and nursery for the study of orchard pests, a mulberry plantation for a food supply for silkworms, and a nursery area for the production of seedling mulberries for distribution.

The Bureau of Soils has been allotted areas devoted to crop rotations for the purpose of learning the effect of a rotation on the production of the soil and an area devoted to a study of the effects of materials not generally employed as fertilizers for the purpose of determining the influence of these materials upon the development of plants as well as throwing light upon the rôle which ordinary commercial fertilizers play in the improvement or impoverishment of the soil. Over eighty distinct experimental areas are involved in this work.

The Bureau of Plant Industry naturally occupies large areas at the farm. Without attempting to refer to all, the following lines of investigations may be mentioned in order to indicate the character and importance of the work at the farm:

AGRONOMIC INVESTIGATIONS.—The agronomic investigations now under way involve the maintenance of a breeding and testing garden for grasses and of extensive cultural and variety tests of sorghums, cowpeas, and other legumes of promise for forage, grain, or green manuring. Some 48 one-twentieth-acre plats are devoted to grass mixtures of various kinds to determine the value of different combinations of grasses for hay and pasture purposes. Besides these, two areas, each containing about 1½ acres, were successfully seeded with alfalfa, which is at present in a very promising condition. Grass and alfalfa breeding work now requires most of the area of the so-called grass garden, consisting of 2 acres which have been carefully prepared by cultivation, manuring, and tile draining.

THE DRUG GARDEN.—The drug-garden work is now very successfully established at the farm. The field plantations have been considerably increased this season and now occupy about an acre. Space for a laboratory will be provided in a building now under construction.

SOIL IMPROVEMENT.—The soil-improvement work at the farm has been continued along the same line as heretofore. Cowpeas are used for adding humus to the soil as well as for gathering nitrogen. About 100 acres of cowpeas were grown and plowed under last season, followed by rye, to which was added an application of 200 pounds to the acre of acid phosphate. The following spring a large portion of the rye was turned under, to be again followed by cowpeas.

Besides the regular rotation, in which cowpeas, rye, and acid phosphate play an important part, a carload each of gas and agricultural lime was purchased and distributed upon areas which have been used for the crop rotation mentioned. It is yet too early to state the results accomplished by the use of these materials, but up to the present time no ill effects have been noted from either agricultural or gas lime applied at the same rate—about 1,000, 1,500, or 2,000 pounds to the acre.

To determine the influence of one season's treatment with cowpeas on the soil of the farm, on one area cowpeas were turned under and another similar area of like character was summer fallowed. In the autumn of 1906 rye was sown upon these areas and at harvest time one-half acre was accurately measured and harvested from each of the plats. The plat upon which cowpeas were grown the previous year gave a yield of rye at the rate of 44 bushels to the acre, while the area which was summer fallowed yielded only 30 bushels.

ORCHARD CULTIVATION.—The peach orchard, which has now reached the bearing stage, was sown in crimson clover in September, 1906, the clover being turned under in June of the current year. This is the first successful use of this crop which has been carried out on the farm.

The handling of one of the orchards which was planted upon comparatively new and rough ground has been somewhat modified so

that the ground after the middle of June is seeded to buckwheat rather than kept cultivated for rye, as has been the practice heretofore.

A cover-crop orchard has been established under the rotation which is to be followed throughout its continuance; that is, a portion is annually seeded with leguminous crops, some of which are to be turned under, others to be cut off, others to stand through the winter as cover crops, while portions of the orchard are to be seeded in various grasses and clovers, in order to note the influence of such continuous treatment upon the growth and period of fruiting of the trees. This work has now been continued for three years.

The fruit plantations at the farm have been further augmented by the preparation and establishment of a small cranberry bog. This is perhaps the southernmost plantation of cranberries in the United States outside of the Allegheny Mountain region. The success or failure of the enterprise will have an important bearing on the future use and development of areas now bringing no return, but so located as to be adapted to the cultivation of this crop.

THE TESTING GARDENS.—The testing gardens, which are a very attractive feature of the farm, have this year proved more successful than ever before. The soil has improved both mechanically and as regards fertility, so that the work of keeping the crops clean is more easily accomplished, while the resulting growth is more gratifying than ever before. Very extensive tests with beets and radishes are now under way, besides the regular testing of the seeds which are used in the Congressional distribution.

GREENHOUSES.—The bank of greenhouses at the farm now consists of six houses 20 by 100 feet. Each house is divided into two rooms. The rooms are so constructed and piped as to admit of being used independently, each room forming a unit which can be compared with any other unit in the group. The units have the same cubic contents and bench area, and the piping is so arranged that the temperature can, without changing the piping, be modified from 75° or 80° F. through all temperatures down to merely keeping out frost. This arrangement, it will be noted, fits the houses admirably for special investigations involving a study of greenhouse physics and the influence of environment on plants. Besides the construction of two new houses in this group, cement walks have been laid in each of the houses previously built and a cement floor has been placed in the potting shed, so that although the bank of houses planned is not yet completed, that portion which has been constructed is in perfect working order.

HEATING PLANT.—An additional boiler has been placed in the central heating plant. The plant contemplates the installation of three 40-horsepower return tubular boilers, two of which are now in position.

The barn, or shed, which was built as a temporary shelter, pending the construction of the permanent buildings upon the place, has been removed from its original location near the front entrance to the rear of the main buildings and has been placed on a concrete foundation. The lower story of this building will be used to shelter farm imple-

ments, while the main floor will be occupied by a drug laboratory and a canning laboratory and as a storage room for plant foods.

NURSERY WORK.—The following summary will indicate the diversity and character of the plants now growing in the nurseries at the farm:

Economic fruits (apples, pears, etc.), 3,138; stocks of various kinds, 4,121; ornamental trees, 150 varieties and species and more than 100,000 in number; ornamental shrubs, 11,400; and hardy herbaceous perennials, 95 sorts.

In addition to the plants just mentioned, some 16,000 ornamental plants have been propagated for use in the greenhouses and about the grounds of the farm.

The small number of some of the species represented is accounted for by the fact that the nursery now contains a portion of the collection of hardy ornamental trees and shrubs which are to be used in the establishment of a horticultural garden which is to form the landscape-gardening feature about the buildings at the farm.

SPECIAL INVESTIGATIONS IN HORTICULTURE.

For administrative purposes, certain groups of projects in the Bureau are handled by the Horticulturist, Prof. L. C. Corbett, as outlined below.

TRUCK-CROP SURVEY, ETC.—For several years it has been the policy of those connected with the office of the Horticulturist to secure information whenever possible regarding the methods pursued in the production, shipping, and marketing of vegetables and fruits. These investigations are now being conducted in the form of a definite survey, the more important crops being taken at first and every detail noted, from the preparation of the soil to the delivery of the product to the consumer. The methods of production followed in one locality are being compared with those of other sections, methods of packing and shipping observed, and the prices received for products of various sections noted. These results are available in answering the questions of correspondents regarding the methods employed and the relative cost and profits of growing the various truck crops. It has been found that the methods successfully used in one section will fail to give results in another, and the causes of these variations can generally be ascertained. The questions involved in the packing, shipping, and sale of truck crops are being investigated. Notes are carefully made and wherever possible photographs secured illustrating the tools and methods employed by successful farmers in the production of truck crops.

As the difficulty of securing competent help increases it is necessary to economize labor by the use of improved implements and machinery. This phase of the work is receiving attention by inducing manufacturers to modify existing implements or to design new ones to meet the special needs of the truck grower. Growers are induced to employ improved tools for preparing the soil and special machinery for planting and harvesting their crops.

Improved strains of standard truck crops are being built up, not for the purpose of changing the type of product now used but to insure the grower a larger return from the land under cultivation.

Investigations are under way to determine whether the present use of heavy applications of high-grade commercial fertilizer is an economical or a wasteful or harmful practice. There are indications that there is a limit beyond which the use of commercial fertilizers becomes wasteful and injurious. It is with the idea of securing a maximum crop without injury to the land and with the least outlay of cash that these investigations have been undertaken.

CROP ADAPTATION FOR RICE LANDS.—During 1905 experiments were inaugurated to determine whether any of the standard grasses and forage and truck crops could be grown upon the rice lands of the South Atlantic coast and therefore be profitably substituted for rice. Two lines of investigation have been conducted, the one with "truck" or vegetable crops and the other with forage crops and cereals. The investigation has shown that a large number of truck crops will thrive upon the rice lands, but that these crops will mature ten days to two weeks earlier upon the adjacent highlands; also that vegetables grown upon the rice lands can not endure shipment as well as those grown upon the highlands. A number of crops that may be grown during the winter months are promising. Onions, for instance, may be sown during September or October, cultivated during the winter months, and marketed during June or July. Bermuda onions thrive and are ready for shipment about the time the Texas crop disappears from the market.

Among forage and cereal crops that are promising on the rice lands may be mentioned corn, oats, cowpeas, common red clover, redtop, alfalfa, Bermuda grass, Para grass, and peanuts. Thus far no crop has been secured that is better adapted to these lands than rice itself, especially with the present arrangements for drainage.

IRISH POTATOES.—The work with Irish potatoes, which has been previously outlined in our reports, has been continued. A collection of some 200 sorts of American and European varieties is now under test in the trial grounds at the farm. The American varieties are also under test at the agricultural experiment stations of North Carolina, West Virginia, Wisconsin, Vermont, and Texas. The test of Irish potatoes at the farm this season is more promising than for several years. The wet weather for two years has been a great drawback to the success of this work.

SWEET POTATOES.—Investigations with sweet potatoes are being conducted to determine varietal differences and the adaptability of sorts to the soils and climate of different localities. In the recognized sweet-potato producing sections a study is being made of every phase of the work, including the methods of growing and their comparative cost, and methods of harvesting, storing, packing, shipping, and marketing the crop. The problems involved in the storage and keeping of sweet potatoes are being investigated in order to determine the best means of curing, the proper temperatures to be maintained in the storage house, and the amount of shrinkage while in storage. Attention is also being given to the uses and possibilities of sweet potatoes as food for stock, as well as the canning and desiccation of the product for human consumption.

PEANUTS.—Owing to the greatly increasing field for the use of peanuts, the demand has grown steadily during recent years and is

now in excess of the supply. There are now four principal varieties of peanuts extensively grown in the Southern States, and while the type of these varieties is quite satisfactory there remains much to be accomplished through the selection and improvement of seed strains for maximum yield. The peanut can very readily be improved by selection and proper culture, and the work undertaken is mainly along these lines. Experiments are being conducted to determine the oil-producing possibilities of the peanut, although at present prices the extraction of the oil would not be profitable.

The use of the peanut as a forage crop and stock food is being encouraged, and it has been demonstrated that the variety known as the "Spanish" is best adapted to this purpose.

The greater portion of the labor of picking and handling peanuts has heretofore been done by hand, but during the past two years great improvement has been made in mechanical lines and the cost of production thereby decreased. Machines have been perfected which eliminate a large part of the labor of picking, thus breaking the bond which held this crop to the limits of the labor supply.

BERMUDA ONIONS.—Special investigations with Bermuda onions have been conducted through the year, and it is hoped that a report will be ready for publication in the near future. Careful investigations of the methods followed in the handling of this crop have been conducted, together with some preliminary work upon the question of a locality in the United States where Bermuda onion seed can be successfully produced. It is gratifying to note that a small quantity of Bermuda onion seed has been successfully produced, which it is hoped will prove of value. There are some difficulties connected with the production of Bermuda seed which do not hold for the production of ordinary types of onion seed.

DUTCH BULBS.—The Dutch-bulb work which has been under way in the Bureau for several years has been largely transferred to the Pacific coast during the current season. An expert in bulb culture has been detailed to the region to conduct the work in the State of Washington, which has been made the headquarters for these investigations. During the year important results have come from the studies in the propagation of hyacinths and tulips, as well as from studying the method of cultivating and handling these bulbs from the time of propagation until they reach marketable size. In other words, American methods have been put into use which indicate the possibility of carrying on this enterprise in a much more economical way so far as hand labor is concerned than is practiced in the Holland bulb-growing regions. The ability to produce the high-grade Von Sion narcissus in the Puget Sound region has been clearly demonstrated. This knowledge should be a great boon to those interested in the production of this superb variety, which can not be successfully grown in the eastern United States.

SCHOOL-GARDEN WORK.—The school-garden work which has heretofore been conducted by the office of the Horticulturist has been considerably enlarged during the present year. The work of supplying flower and vegetable seed to teachers of the rural schools was extended to every State in the Union save two, namely, Arkansas and Nevada. The four States which received the greatest number were New York, Illinois, Maryland, and Massachusetts in the order

named. The extent of this work can be seen when it is stated that the number of individual gardens which, if planned on the basis suggested in Farmers' Bulletin No. 218, could be maintained with the seed furnished, aggregates 36,173 flower gardens and 31,480 vegetable gardens. In addition to the seed, 5,102 decorative collections, consisting of ten varieties of annual flowering plants, have been distributed to these schools. The total number of packets of flower and vegetable seed sent out for school purposes was 388,285. It is evident from these figures that there is a very general interest in the school-garden work, and as the demand increases each year it is believed that a very important educational want is being met.

EXPERIMENTAL GARDENS AND GROUNDS.

The work of caring for the greenhouses, gardens, and grounds of the Department has continued, as in previous years, under the direction of Mr. E. M. Byrnes, Superintendent. During the year there were propagated and distributed 94,723 plants, representing 72 species and varieties.

GREENHOUSE OPERATIONS.—In the new range, consisting of 14 greenhouses, the work of the year has included the propagation and testing of plants and fruits secured by the Office of Seed and Plant Introduction; the propagation of plants for ornamenting the grounds of the Department (including those of the Weather Bureau), for experimental work, and for distribution; the experimental work of the pathological and physiological offices of the Bureau, as well as the experiments with vegetables and flowers; and work connected with the seed-testing, tea-culture, and drug-plant investigations of the Bureau.

In the experimental work with florists' crops the following plants were grown: Roses, 1,760 plants in 7 varieties; carnations, 5,063 plants in 15 commercial varieties and 576 seedling plants resulting from crosses made during the past winter; chrysanthemums, 2,130 plants in 180 varieties, and 145 seedling plants resulting from crosses made last autumn.

The chrysanthemums were grown for our annual display, which was opened on November 8, 1906, continuing until November 16, inclusive. Great interest on the part of the public was shown, the number of visitors at times being so large that the regular work in the greenhouses had to be temporarily suspended. After the close of the exhibit the flowers were cut and distributed to the various hospitals in Washington, D. C.

In the old range of greenhouses, four of the six houses are devoted to the experimental work of the pathological and physiological offices of the Bureau. The other houses contain collections of 81 varieties of European grapes, of citrus and other tropical and subtropical fruits, and also of tropical and other economic plants. In addition to these houses two small greenhouses are allotted to the school garden work of the normal schools of Washington, D. C.

GREENHOUSE CONSTRUCTION AND REPAIRS.—A new greenhouse 40 feet wide, 142½ feet long, and 14 feet high has been constructed during the year on the north front of the Department grounds, immediately east of the present range of greenhouses, at a cost of $3,171.17. Such repairs have been made to the old greenhouses as were necessary

to keep them in temporarily serviceable condition. Five greenhouses were given one coat of paint on the exterior, and additional heating surface was placed in two greenhouses in order to keep them up to the required temperature. The two steam boilers heating the old range of greenhouses and the office rooms of the Bureau were overhauled, cleaned, and painted, and a total of 1,072 feet of terra cotta drains were laid with six 22-inch catch-basins and connected with the main sewers in order to carry off surface water from the greenhouses, workshops, and storage sheds.

General improvements in the grounds.—The fence inclosing the north side of the Department grounds, consisting of 116 panels of iron fence and six sandstone pillars, was thoroughly cleaned and painted during the year, as were the two iron pagodas and the iron railing on the north front of the plaza facing the Department building. A total area of 123 square yards of asphalt roads was placed in repair, and a cement road 8 feet wide and 100 feet long was laid near the southwest corner of the grounds to facilitate the delivery of fuel to our steam-heating plant. As referred to in the last report, the old gravel roads were macadamized under the supervision of the Office of Public Roads, a special appropriation having been secured for this purpose. As completed, these roads are 2,630 feet long and 16 feet wide and are supplied with drains, sewer connections, and five new catch-basins. Upon the completion of the new roads the ground was graded and sodded to the margin of the roads, 678 square yards of sod being used in the work.

Eleven young evergreen trees and four deciduous trees were planted in the grounds to replace a like number which had died during the winter, and 60 ornamental and flowering shrubs were added to the collection in the grounds. During the season the lawns were mowed and their edges trimmed as often as required; the asphalt roads and walks were swept daily and the macadam roads watered daily during dry weather; dead branches were removed from the trees and shrubs; the shrubs and hedges were pruned as often as necessary, and the walks were kept free from weed growth. A portion of the lawns was top-dressed with 400 cubic yards of well-decomposed stable manure, and the remainder was given a dressing of commercial fertilizer, while bare places on the lawns were forked and seeded in grass.

A collection of 10,600 standard sorts of hyacinth, tulip, and narcissus bulbs and 3,200 pansy plants were set out in beds for ornamental purposes, and 9,000 crocus bulbs were planted on the lawns in the autumn for display in the early spring. A collection of 18,347 bedding plants in 63 species and varieties and of 560 tropical plants in 30 species and varieties was planted in beds in the spring. In our trial grounds were planted 6,307 hybrid lettuce plants for seed selection and a collection of hybrid cowpeas for testing.

Hybridization of plants.—The plant hybridization and propagation work conducted by Mr. George W. Oliver has progressed satisfactorily during the year. A large number of hybrid forms of the cowpea have been raised, and these are now being tested in various parts of the country; several new crosses of the Texas and Kentucky bluegrasses have been effected, and the California wild oat has been successfully crossed with several eastern varieties. The new hybrid

lettuces are still in process of fixation. The new hybrid loquats are expected to fruit this year, and 600 hybrid barberries have been sent to the Northeastern States for trial. A collection of native, Chinese, and Japanese persimmons has been secured for crossing. The new Finger lime has been successfully propagated by a new method, which enables the seedling plants to make a very rapid growth. The experiments in growing the Easter lily from seed on a commercial scale are progressing satisfactorily in California and Arizona.

INVESTIGATIONS OF DRUG PLANTS AND POISONOUS PLANTS AND STUDIES OF AMERICAN TEA.

In order to bring together closely affiliated lines of work, investigations of drug plants and of poisonous plants and the field and laboratory work connected with the establishment of the tea industry in this country have been placed in charge of Dr. Rodney H. True.

DRUG-PLANT INVESTIGATIONS.

During the past year the drug-plant work has fallen into the following rather clearly defined lines:

(1) Testing work on plot cultures, including many kinds of plants which it was desired to introduce.

(2) Work on a small commercial scale on those kinds promising best under small culture conditions.

(3) Laboratory investigations at Washington or elsewhere in connection with field investigations.

(4) Hop work in field and laboratory.

(5) Lemon work in field and laboratory.

TESTING STATIONS.—During the year testing stations have been maintained at the Arlington Experimental Farm near Washington, D. C.; at Ebenezer, Florence County, S. C., in cooperation with Messrs. E. Cottingham and J. W. McCowan; at Huntington, Putnam County, Fla., in cooperation with Dr. George E. Walker; at Pierce, Wharton County, Tex., in cooperation with Mr. A. P. Borden, and at Riverside, Cal., in cooperation with Mr. Fred. W. Reed. By means of these widely separated stations we are enabled to ascertain something of the effect of climatic conditions on the products obtained. Work of this sort has been carried on at Burlington, Vt., in cooperation with the Vermont Agricultural Experiment Station, until the present year, but the results reached seem to indicate clearly that a large proportion of our most important drug plants thrive better in a warmer climate. Moreover, the labor supply has become very short lately, and the high prices demanded would operate against the adoption of our projects by farmers. For these reasons this station has not been continued.

POPPY WORK.—Another attempt has been made to get a sufficient quantity of poppy capsules to carry out the process of alkaloidal extraction on a commercial basis. Several cooperators in different parts of the country are growing small areas for this work. The Texas material has been drowned out by a cloud-burst and that from Florida has been killed by a drought. However, other plantings promise better results.

CAMPHOR WORK.—An experimental station for testing different sorts of camphor and for propagating sorts especially rich in gum has been arranged for at Huntington, Fla., in cooperation with Dr. George E. Walker, and nurseries have been built and planted with seed from different parts of the United States and from Japan. A few Chinese trees have also been imported for this purpose through the Office of Seed and Plant Introduction and Distribution. By a careful selection from these different kinds it is hoped to obtain the type richest in gum. Several private concerns have undertaken camphor growing on a more or less extended commercial scale as a result of the demonstration made by the Department. A further planting is to be made at Pierce, Tex., in cooperation with Mr. A. P. Borden.

AMERICAN HOPS.—The work of the past year has been directed chiefly along the line of the relation of methods of curing and handling to the hard and soft resin content of the hops. In general, the results obtained seem to show that curing at lower temperatures than those usually employed gives a hop of higher soft-resin and lower hard-resin content. It is traditionally believed that a high soft-resin content makes hops of higher quality than a high hard-resin content. The basis for this belief needs investigation, as well as a number of factors at present neglected. The relation of sulphuring to the quality of the product has received some attention, with very interesting results.

PAPRIKA PEPPERS.—Experiments carried on at Ebenezer, S. C., for two years have resulted in the growing, curing, and marketing of about 7,000 pounds of paprika pods of the Hungarian type. The selling price has been low, owing to the conservative attitude of buyers toward a new source for this article. However, there has been no difficulty in selling the entire crop at a substantial though not sensational profit. There seems to be a disposition on the part of spice dealers to regard the American product as an acceptable commercial article.

MISCELLANEOUS FIELD WORK.—Spanish licorice, grown at Ebenezer, S. C., for several seasons, has seemed to do well and will be harvested, at least in part, this fall. Late spring frosts severely injured plantings of belladonna, digitalis. and varieties of cayenne peppers at the same place.

LEMON INVESTIGATIONS.—It is recognized by fruit dealers that while the American lemon is in most respects a very superior fruit, it is deficient in keeping qualities after it reaches the market. To what cause this deficiency is due is an open question. In the hope of getting some light on it investigations into the methods of handling lemons were begun during the past winter in southern California. This work was of a preliminary nature, but developed some promising lines along which to attack the problem.

LABORATORY WORK.—Work in the laboratory has kept pace with the field work. By a modification of our former method, the available output of morphine from poppy capsule walls has been considerably increased. The work on red peppers has resulted in a practical method of estimating pungency which may have considerable commercial value to those who grind cayennes and other red peppers.

The volatile oils of hops from different sources have been distilled and some important commercial propositions apparently await the development of this line of work. In connection with the volatile oil demand of the country a few sorts of plants furnishing this type of product have been grown and distilled. Some promising wild plants rich in volatile oils have been investigated with very suggestive results. Several oils of very good quality have been obtained in small quantities.

PLANS FOR FUTURE WORK.—The utility of the testing stations has been demonstrated, and in order to increase our range of information the establishment of an additional station at some point in the upper Mississippi Valley, to represent a large and fertile agricultural area, seems desirable. In order to test the behavior of a number of very important Old World drug plants grown under conditions not found at any of our established or prospective stations facilities for such tests in the arid Southwest should be provided.

The camphor work should be pushed with all possible vigor in favorable regions and should be tested on a commercial scale in Texas, preferably at Pierce, where a part of the work is already located. The camphor shortage increases in acuteness as the volume of the demand increases. In view of the fact that no one region seems likely to be able to supply this demand, it is desirable to undertake this additional experiment in order to test primarily the commercial side of the project. The poppy work should be continued along present lines until the possibilities of utilizing this source of morphine are thoroughly worked out.

Hops rank as the fourteenth crop in value in the United States, and the future of this industry is closely involved in improving the processes of handling the product and in improving the stock. The distinctive American sorts offer a very promising field for utilizing the principles of plant breeding in raising the quality of this product. Work should be continued in these directions. Fairly equipped laboratory facilities in hop regions are a distinct requirement for prosecuting this work.

The possibilities of perfumery-plant production in this country have never been adequately explored, and field and laboratory work along these lines should be carried out to develop them. The lemon work should be prosecuted in the field and laboratory along somewhat broader lines than has hitherto been possible. A study of lemon storage in the eastern centers is a necessary forward step, while the laboratory work should be maintained so as to keep pace with the field investigations.

POISONOUS-PLANT INVESTIGATIONS.

The projects of the previous year have continued to receive attention during that now closed. In view, however, of the apparently increasing importance of the loco problem to western stockmen special attention has been given to this line of work both in field and laboratory, somewhat to the neglect for the time being of other projects.

LOCO-WEED DISEASE.—Pasture and corral feeding experiments were carried out at Hugo, Colo., in cooperation with the Colorado Agri-

cultural Experiment Station, on a variety of animals, including horses, cattle of different breeds, sheep, mules, and goats, the general results being that all of these animals were found to be susceptible to loco-weed poisoning, with the usual symptoms. Methods of remedial treatment were also studied, with evidence of at least partial success. The best means of getting rid of the weeds also received attention, with rather interesting results. The belief that the plant can not be killed by digging is erroneous. A plant cut off below the crown does not seem to grow again and an area freed from loco by digging remained free except around the edges where seed from neighboring plants drifted in upon it. Other methods of destruction are being tested.

LARKSPUR POISONING.—Work on larkspur poisoning was carried on in cooperation with the Colorado experiment station. Dr. G. H. Glover, of the station, supervised the field work and published a paper on the subject of larkspur poisoning which included a summary of the laboratory work.

MILKSICKNESS.—In response to a request for help in determining the cause of an outbreak of milksickness in cattle pastured near Minooka, Ill., a representative of this office made a field inspection of the situation, while another undertook a laboratory study of the weed often regarded as responsible for the trouble. White snakeroot (*Eupatorium ageratoides* L. f.), though widely distributed in the eastern United States, is associated with this disease only locally. Laboratory tests failed to show any connection between this plant and the disease.

BIGHEAD.—This serious disease of sheep, occurring from Nevada to Idaho, often causes great and sudden losses to sheep men. Those who have reported on the trouble have generally held the opinion that it is due to the action of poisonous plants. A severe outbreak in May was reported at Soda Springs, Idaho, and a member of the office staff accordingly visited that locality to observe the course of the disease and secure materials for study.

LABORATORY WORK.—In addition to work previously referred to, laboratory investigations on a number of other poisonous plants have been carried on. Mountain laurel (*Kalmia latifolia*), occasionally the cause of considerable losses of sheep in both the Eastern and the Southern States, was proved to be a very violent poison. A publication giving the results of this work has been prepared. Death camas, a species of Zygadenus, mistletoe, and several other poisonous plants have had more or less attention.

Special attention, however, has been given to the loco problem in the endeavor to ascertain the exact nature of the harmful substance present. This has been only approximately determined. In addition, such species of the Aragallus and Astragalus genera as were obtainable were tested with reference to their poisonous properties. An attitude of general suspicion directed against members of these genera found in the disease-infected area is justified, since practically all kinds thus far tested are able to produce sickness or death.

PLANS FOR FUTURE WORK.—The work on the loco disease should be pushed with all vigor, since the losses due to this cause are very

great. Under present conditions the Office is not able to carry on work at more than one point and must neglect urgent appeals from other suffering regions. At least one more experimental station should be provided for, probably in Arizona, where great losses are repeatedly met with. In view of the large numbers of poisonous plants found on the grazing areas of the West a knowledge of these harmful plants is essential to stockmen. Means should be provided for distributing broadcast accurate colored illustrations of the most dangerous kinds, with a brief description of these plants and a concise statement of methods of treating poisoned stock.

A great popular demand reaches this Office for a method of eradicating poison ivy and allied poisonous species without contact with them. It is highly desirable to pay some attention to the possibilities of killing these species by chemical treatment. A number of other poisonous plants occasioning losses locally should be studied. Poultry raisers, especially in the State of Maryland and in the District of Columbia, lose many fowls on account of the presence of considerable quantities of corn-cockle (*Agrostemma githago*) in the commercial chicken feeds for sale in these sections. These matters should be investigated as the troubles arise.

TEA CULTURE INVESTIGATIONS.

Tea culture work during the past year has considered chiefly in continuing the experiments in South Carolina in cooperation with Dr. Charles U. Shepard and in increasing the plantings at Pierce, Tex., Laboratory work on the aromatic properties of tea has also been carried on.

WORK IN SOUTH CAROLINA.—At "Pinehurst," Summerville, S. C., Doctor Shepard has continued work along the usual lines. Field and factory methods have been tested with special reference to the cheapening of the processes involved. The increasing difficulty of getting labor where it was formerly abundant, together with the increased rate of wages, has made it necessary wherever possible to substitute machinery for hand work. A specially designed machine for pruning tea was tried this season, but it was found to require more power for successful operation than could be furnished by an ordinary pair of mules, the motive power available. Further efforts are being made to secure before next season a successful appliance for this labor-consuming and expensive process. Although the cold weather prevailing during the spring has shortened the tea-picking season, if the remainder of the year is favorable there is a fair prospect for a good output of tea.

In view of the fact that on many plantations in the South small plantings of tea have been made in the past for ornamental purposes, it was thought to be practicable to utilize these plantings as a source for home-grown tea. Accordingly a kitchen process for making tea was worked out, calling for only such utensils as are found in every kitchen. The results are embodied in Farmers' Bulletin No. 301.

During the past year the Department has lent aid to the American Tea Growing Company, at Rantoules, Colleton County, S. C., in the form of the temporary use of a few pieces of factory machinery and such help as could be given by frequent visits to the plantation by a

representative of the Office. Although the tea work was considerably hampered, the crop of tea harvested gave reason for encouragement, both as regards quantity and quality. Since this plantation is located in the rice-lands district, there seems to be reason for thinking that the tea industry has a promising future before it under these conditions of climate, soil, and labor.

WORK IN TEXAS.—During the past year the tea area has been increased by new plantings from the nursery. In all 40 acres have been put in the field, and the outlook for a considerable picking during the coming season continued good until within the last two months. Heavy floods have submerged large areas along the Colorado River, including the tea fields. The result has been disastrous, practically all of the younger plantings having been ruined, leaving only about 35 acres. This is a severe setback, and every effort will be made to make good the losses at the earliest possible date.

LABORATORY WORK.—The investigation of the substances giving the characteristic aromatic properties to the tea leaf is still in progress and the nature of these bodies is fairly well known. However, efforts to separate these in a pure state are rendered exceedingly difficult and expensive on account of the fact that they are present in only the minutest quantity, and tea must be extracted in hundred-pound lots to get even traces of these substances. On account of its very great importance commercially and scientifically the work is continued.

PLANS FOR FUTURE WORK.—Work should be continued in the field and laboratory along the lines primarily laid down. The original area of the planting at Pierce, Tex., should be restored and increased to 100 acres of good tea in order to reach a fair commercial scale. The improvement of processes and machinery should be studied in order to reduce the cost of production as far as possible. The laboratory studies begun should be pushed as far as possible and the material and facilities necessary for carrying the work to completion should be provided.

The very important phase of the tea work dealing with the improvement of tea by the application of the methods of the plant breeder should be prosecuted vigorously. To the most careless observer a field of tea of a given variety from a common source shows very great variation in productiveness, color, size, and form. A great opportunity therefore presents itself for the selection of the best types for propagation by vegetative reproduction.

SUGAR-BEET INVESTIGATIONS.

The laboratory and field studies of the sugar beet have as heretofore been in charge of Dr. C. O. Townsend, assisted by Mr. E. C. Rittue and Mr. H. B. Shaw. Mr. J. E. W. Tracy and Mr. J. F. Reed are also assisting in this work, especially in the matter of seed improvement. The work accomplished in breeding high-grade pedigree strains of sugar-beet seed, the commercial production of seed, the study of diseases, etc., is set forth in the accompanying pages.

BREEDING AND ESTABLISHING HIGH-GRADE PEDIGREE STRAINS OF SUGAR-BEET SEED.—The breeding of pedigree strains from individually analyzed and recorded roots has been placed on a firm basis in

five different localities representative of the sugar-beet areas, and arrangements are now being completed for carrying this work forward on a considerably larger scale. The work of developing a strain of pedigree seed has gone far enough to insure the growing of commercial crops of seed from pedigree roots and will, it is expected, result in considerably better seed than the commercial seed now generally used throughout the United States. Some of the mother beets that have been used to establish these lines of breeding have tested more than 24 per cent of sugar and have at the same time been of good average weight; that is, 24 ounces or more. The seed from such individual mothers has been carefully planted, their product being again selected and tested to determine the roots having the strongest power to transmit their good qualities. Such as show remarkable abilities for transmitting such qualities are used for the establishment of strains.

COMMERCIAL PRODUCTION AND TESTING OF AMERICAN-GROWN SEED.—The commercial tests made of American and foreign grown seed have been carried on in all the sugar-beet sections of the country and the work though not as yet conclusive tends to show that America can grow sugar-beet seed of excellent quality. During the past year this work was conducted by forty-nine experimenters throughout the sugar-beet area under the direction of this Bureau, and the American-grown seed yielded about 600 pounds of sugar to the acre more than the foreign seed used by the various factories. Some 15,000 pounds of seed grown at Fairfield, Wash., from chemically analyzed grandmothers testing 22 per cent of sugar or more were distributed by this Bureau, and this seed is being tested during the present year in the various sugar-beet areas of the country. Preliminary reports on this seed show that it is of remarkable vigor and strength, and there is every reason to believe that it will show a considerable increase in both yield and sugar content.

TESTING AMERICAN AND FOREIGN GROWN VARIETIES OF SEED.—The work on this line has progressed very satisfactorily and is being conducted in eight different localities. This is the sixth year that these tests have been carried on, and it is hoped that a report showing the results of the work may soon be issued. A report has not been published up to the present, as the different lots of seed of the same varieties imported from year to year show a wide variation in quality, and accurate conclusions can not be drawn until several years have been spent in experimenting. Our reports to date, however, show that the American-grown seed compares very favorably with the best varieties imported.

SINGLE-GERM BEET SEED.—Our investigations in connection with the development of single-germ beet seed have been continued during the past year, with the result that the percentage of single-germ seeds has been increased from 26 per cent per plant, as given in our last report, to 50 per cent. While there is a reversion toward a smaller number of singles in some of the plants, we obtained not only 50 per cent of singles in several plants, but many of the others produced upward of 40 per cent, and a considerable number more than 30 per cent of singles, so it is plain that the tendency is toward a higher percentage of singles each generation.

In connection with the development of single-germ beet seeds, we are also developing plants by selection and breeding which shall produce only two-germ seeds, others which produce three germs only, others four, and others five germs. This has been considered advisable, inasmuch as it can be done with comparatively little additional expense and for the reason that, if the single-germ seeds should for any cause prove unsatisfactory for any locality, we will have plants producing seeds of the best construction to meet the required conditions. It is entirely possible that single-germ seeds may be best suited for certain localities, while in other sections of the sugar-beet area a two, three, or even a five germ seed may be most practicable.

Selection of beets.—Beets are being selected as heretofore for alkali resistance, early maturity, increased tonnage, high sugar content, and drought resistance. The first of these projects is being conducted in cooperation with Mr. T. H. Kearney, Physiologist in Charge of the Alkali and Drought Resistant Plant Breeding Investigations of this Bureau. It has been possible to overcome to some extent the difficulties that were first encountered in regard to keeping our apparently alkali-resistant seed beets over winter, and this year a considerable quantity of sugar-beet seed from these apparently alkali-resistant plants will be obtained. This will be utilized next year under such conditions as it is hoped will increase to some extent the resistance of this strain of sugar beets to alkali. Similar progress is being made with the other selection projects. Considerable time will necessarily be required to develop the resistant strains and to fix the characters so that reversion to original characters in succeeding generations will not take place.

Siloing seed beets.—The experiments in connection with the preservation of seed beets during the winter have been continued and some additional data of value have been obtained. Our best results, as heretofore, were secured by placing the beets in piles and covering them with a layer of straw and then with a sufficient layer of earth to keep the straw in place and to prevent the frost from reaching the beets. Even in the best silos there appeared here and there a decayed beet. These were distributed throughout the silo without reference to their position; that is, whether at top, bottom, center, or sides. It is difficult to account for these decayed beets appearing here and there, and further investigation will be necessary to determine why some beets which go into the silo in apparently healthy condition decay, while others remain perfectly sound. A wooden silo was constructed with double walls, which it was hoped would give satisfactory results because of the simple method of protecting the beets and the fact that they would come out of the silo in perfectly clean condition for handling in the spring, but practically all of the beets in this silo molded during the winter and were unfit for seed production.

Fertilizers for sugar beets.—Experiments with various forms of fertilizers have been continued during the past season, and in addition to the comparisons that are being made between the commercial fertilizers, stable manures, and green crops used as fertilizers, experiments have been carried on to determine the best method of applying commercial fertilizers to sugar beets, both with

reference to the time of application and whether or not the fertilizer should be applied broadcast or as close as possible to the beet. Besides single applications of fertilizers at different times, we are comparing the effect of a given quantity of material applied at one time with the same quantity at definite intervals throughout the season. These experiments will be continued until a sufficient amount of data is obtained for reliable conclusions.

CULTURAL METHODS FOR SUGAR BEETS.—Various methods of preparing the seed bed, planting the seed, and caring for the crop have been conducted during the past season, as heretofore. Special attention is being given to depth of plowing, subsoiling, width of rows, and time and manner of cultivation. It is the aim to carry on these cultural investigations from year to year in exact duplicate as far as possible, so as to secure comparative data regarding cultural methods under the various climatic conditions which exist from season to season. By this means it is hoped to obtain information that will be sufficiently reliable to enable the growers to decide whether certain cultural methods are advantageous in the growing of sugar beets.

EXTENSION OF THE SUGAR-BEET AREA.—As heretofore, numerous requests were received last season for sugar-beet seed for trial. So far as possible this seed has been supplied in all cases in which the requests have come from localities where the soil and climatic conditions promised favorable results. The seed sent is always accompanied with instructions for preparing the ground, planting the seed, and caring for the beets. In the autumn, samples are selected and tested for sugar and purity. In this way many valuable data are being collected, which will undoubtedly be of great value to the farmers and to the factories, either by pointing out the localities that are best suited for sugar-beet growing or by indicating those areas which, because of some soil or climatic condition, should be avoided. It is our aim to have a thorough test made wherever this work is undertaken, several farmers in the same locality planting small quantities of seed and repeating the experiment for several years. In this way farmers become more or less familiar with the methods of growing sugar beets and it is possible to determine the climatic conditions affecting the crop from season to season.

DISEASES OF THE SUGAR BEET.—Several diseases of the sugar beet have been investigated during the past year. As in previous years, the two that have done the greatest damage are curly-top and leaf-spot.

As usual, curly-top has been confined to the western part of the United States, and while there was no serious outbreak during the past season, numerous cases were to be found in many of the sugar-beet fields of the West, distributed without reference to soil or climatic conditions. In addition to the twenty or more theories that have been previously investigated, several other possible causes of this disease have been taken up and are now under investigation in greenhouse and field. It is hoped that the cause of curly-top may be determined in the near future and a practical remedy discovered that will enable the growers to control this disease, which has done so much damage in the past.

In connection with leaf-spot, which is due mainly to the presence of *Cercospora beticola*, other fungous diseases of the sugar beet are being studied with a view to determining the life histories of the parasites, their method of dissemination, and the most practicable means for their suppression and control. It has already been demonstrated that the leaf diseases of the sugar beet, so far as they are due to fungi, may be controlled by the use of Bordeaux mixture. The most serious problem that now confronts us in this connection is the application of this mixture on a commercial scale at a sufficiently low cost to make the remedy practicable. This phase of the question, together with the life histories of the fungi, is still under investigation.

The root diseases of the sugar beet are more difficult to control, but may usually be overcome by the proper rotation of crops.

By-products of the sugar factory.—Data are being collected from year to year regarding the use of various by-products, such as beet pulp, lime cake, and molasses, with a view to determining to what use these by-products can be put that will render them of greatest value to the factory and to the farmer. Undoubtedly in different localities these by-products can be used to best advantage in different ways. These questions are being studied, and as soon as sufficient data are obtained to establish definite results a report thereon will be made.

GRAIN INVESTIGATIONS.

Important progress in this important work under the charge of Mr. M. A. Carleton, assisted by a corps of laboratory and field assistants, has been made during the year. The work has been conducted along the following lines:

Winter oats.—Experiments are still being made for the purpose of establishing winter oats. The best success so far has been obtained with the variety known as Snoma, an oat introduced originally from the Southern States to South Dakota, and grown there as a spring variety, but sown very early, and then afterwards employed by this Department as the basis for development into a winter oat. This variety appears considerably hardier than the Culberson, which heretofore has been considered the best. The Snoma is now grown on a number of demonstration farms, and an effort is being made to increase the seed as rapidly as possible.

Kharkof wheat.—This strain of the Crimean or Turkey wheat group continues to give better results ordinarily than other kinds, particularly in the extreme northern and western portions of the hard-winter-wheat area. So much of it is now grown that it forms a considerable portion of the winter-wheat production of the Middle West. The northern extension of this winter-wheat district is dependent almost entirely upon the employment of the Kharkof variety. Every year it is grown in new localities in South Dakota, and it has been grown successfully at a few points in Minnesota and southern North Dakota.

Durum wheat.—A careful résumé of different estimates of the durum wheat crop for the year 1906 would indicate that about 45,000,000 bushels were harvested, a little less than one-sixteenth

of the entire wheat production of the United States for that year. Of this total production there were exported to foreign countries 20,000,000 bushels. It is not likely that more than 5,000,000 bushels were used in sowing the acreage for 1907. There are left, therefore, 20,000,000 bushels for domestic consumption, practically all of which has been consumed long before this time. An increased use of durum wheat is made each year for breakfast foods, and a considerable portion of the crop is no doubt used for this purpose. There is, nevertheless, a large proportion of the 20,000,000 bushels that has certainly been used by the mills for making bread flour. Practically all of the durum wheat crop that was available in large quantities was sold before the end of the winter, while a considerable part of the crop of 1907 was sold in advance.

The field work with this wheat is now confined entirely, as during the previous year, to the selection and propagation of pure types. Particularly important results have been obtained in cooperation with the North Dakota Experiment Station, where the rigid selection of durum wheat has led to the establishment of a particular type which has recently given an increased yield of at least 50 per cent over that of other varieties. Much more is also being learned as to the adaptation of this wheat to high altitudes. It is now possible also to draw the line more definitely between varieties adapted to the southwestern districts and those suitable for the more northern regions.

SORGHUM INVESTIGATIONS.—The Agronomist in charge has recently given special attention to the classification of all sorghums so far obtainable throughout the world, and a report on this work is now ready for publication. This has been an exceedingly important study, and although done almost wholly from the botanical standpoint will be of much use to those who are interested in sorghums in any way.

Studies have been made also of the causes of sterility in sorghums and a small fly, the sorghum midge, was found to be the cause.

The commercial uses of the grain sorghums have also been investigated and experiments continued for the development of strains of Kafir corn and milo having a shorter growing period.

EXPERIMENTS WITH EMMER.—More extensive experiments have been made with emmer during the past year, with the result that it continues to prove an excellent crop for the drier districts and for cultivation at high altitudes. The most interesting experiments have been made with the Black Winter variety, which is sown in the fall and is found to resist cold fully as well as any of the hardy winter wheats. This is a very great advantage, as, like all other grains, emmer, if sown in the autumn, ripens earlier, is freer from the attacks of fungi and insects, and produces much better yields than the same kind of grain sown in the spring. Moreover, the Black Winter variety is remarkably resistant to rust and also to drought.

WHEAT IMPROVEMENT ON THE PACIFIC COAST.—The work on the two grain experimental farms in California, conducted in cooperation with the State experiment station, has been under way for three years. Several varieties of wheat that maintain a larger amount of gluten than the common wheats grown in that region are already

fairly established. Probably the most important results so far, however, are the effects that these experiments are having on the general crop management and methods of harvesting in that State. It is being demonstrated that much better methods of cultivation are necessary, as well as a more general use of other crops in a systematic rotation with cereals.

Amarillo Experimental Farm.—The experiments of this farm, which are largely with cereals, have come to be of great advantage to the many people who have moved into the Texas Panhandle during recent years. A cool, impartial idea of what may or may not be done is thus being obtained, giving a much more solid basis for the agriculture that is being attempted in that region than is derived from ordinary reports intended simply to "boom" the country. Special results have been obtained which show the superior value of particular varieties of winter wheat, such as Kharkof and one or two strains of the common Turkey, these varieties being the only winter wheats that really survived the very severe weather conditions of the past spring. A large part of the work for the development of quick-maturing varieties of Kafir corn is being done at this place.

Rust and smut investigations.—A large part of the work of the year in this line has been to determine the comparative value of different preventives of smut and the amount of time required for the immersion of seed in solutions of different strengths to give best results. Some special attention has been given to the smuts of sorghums, which have recently become rather serious in the Southwest.

In the work with rusts further investigations have been made of the different host plants that are known or suspected to harbor the same rust species that occur on cereals. Numerous hybrids have been made to obtain rust resistance in wheats having good qualities otherwise.

Rice investigations.—During the year the headquarters for the rice work has been transferred from North Galveston, Tex., to Crowley, La. At this place very extensive experiments are now being carried on in cooperation with the Louisiana Experiment Station. The purpose of the work and general methods employed have been previously mentioned. From the results of the one year's work at Crowley, taken in connection with the work already done in southern Texas, it is found that there are a number of entirely new varieties of rice much better from the standpoint of earliness and ability to stand erect in the field than any of those heretofore grown in this country. At the same time several of these appear to be of very good quality. A special selection is being made of certain varieties having a very large grain. A large-grained rice is very desirable so long as it can be at the same time easily milled.

Food value of grains.—The amount of work necessary in connection with the determination of the food value of various grains has increased very much because of the increasing number of new or introduced varieties of cereals that are being studied at the different experimental farms. Determinations are made of the chemical composition not only of these new cereals but of many standard varieties for purposes of comparison. During the past year special attention

has been given to the analyses of sorghum and oat varieties. This work is carried on in cooperation with the Bureau of Chemistry.

WHEAT DETERIORATION.—The investigations of the causes of the deterioration of wheat, also conducted in cooperation with the Bureau of Chemistry, have led to still more definite results during the year. It was previously suspected that the softening of the grain and the overproduction of starch, producing white spots and "yellow berry," were due generally to unusually wet weather, or in irrigated districts were caused by the application of too much water. In a number of instances two samples of the same variety of wheat have been received, the one showing very soft or light-colored grains and the other the usual flinty grain, the only difference in conditions being that the former had been affected by a much greater amount of water than the latter. Numerous pot experiments have been conducted in which different amounts of water were applied at different intervals, the results confirming these observations.

GRAINS ADAPTED TO HIGH ALTITUDES.—In recent years in the intermountain districts attempts have been made to extend the cultivation of grains and other crops to higher altitudes, and in connection with these efforts the Department has been called upon to assist in providing cereals likely to be adapted to such districts. A number of demonstrations have been made on a small scale with considerable success. Recently the work has become much more important, and during the year a special experimental farm has been inaugurated in Utah, in cooperation with the State experiment station, for thorough work along this line. Other work in a smaller way is being done with much success at different points in Wyoming and Idaho, some of these demonstrations being made at altitudes of 8,000 feet.

DEMONSTRATION WORK IN PENNSYLVANIA AND MARYLAND.—For some time millers have complained of a deterioration in the quality of wheat in the noted wheat district of southern Pennsylvania and the adjacent portion of Maryland. In response to the requests of millers and farmers a small demonstration farm has been established near York, Pa., on which a number of the best wheat varieties have been grown in comparison and a study made of the effect on these wheats of fertilizers and different methods of seeding. This farm has been in operation only one season, but the results taken in connection with those that have been obtained for several years in cooperation with the Maryland Experiment Station have already furnished some valuable suggestions for wheat improvement in this area.

PLANS FOR THE FISCAL YEAR 1908.—Attempts will be made to develop still hardier varieties of winter barleys and winter oats in the hope that the area to which these cereals are adapted can be extended still farther north.

Selection work will be continued with the aim of producing, if possible, hardy winter varieties of durum wheat, attention being given also to the combination of this quality with good milling quality and resistance to rust and drought.

Analyses for the determination of food value will be made of a considerable series of nonsaccharine sorghums and introduced rices.

In the study of rusts and smuts special attention will be given (1) to working out the field-plat method of selecting plants for disease resistance; (2) to a thorough study of the smuts of sorghums; and (3) to a determination of the most practicable methods of applying preventives for smuts and for disinfecting thrashing machines.

In rice investigations the development or adaptation of certain varieties for special purposes will receive a great deal of attention, while methods of cultivation and application of water in irrigation will be investigated.

The Agronomist in charge of Sorghum Investigations will give much of his time to the study of the commercial uses of grain sorghums and will continue his present investigation of the adaptation of varieties. There will also be a continuation of the selection work for the production of short-season varieties of Kafir corn.

Further demonstrations will be made in Pennsylvania and Maryland to aid both the farmer and miller in establishing varieties of wheat that will yield most and at the same time produce a grain of good milling quality.

It will be necessary through the establishment of other experimental and demonstration farms to conduct more extensive operations with different cereals supposed to be adapted to high altitudes, a large part of the new work to be located in Idaho, Wyoming, Montana, and western Colorado.

GRAIN STANDARDIZATION.

The work on grain standardization is the outgrowth of an investigation authorized by Congress and begun July 1, 1901. This investigation has for its objects the determination of the causes of the deterioration of grain in transit and storage, the devising of methods for preventing such deterioration and of methods for grading commercial grain accurately, and the demonstration of the practicability of these methods.

Establishment of laboratories.—Under enactment of Congress effective on July 1, 1906, grain-testing laboratories were introduced into the work, and after giving all American export points consideration and conferences with the authorities of the several trade bodies in those markets, it was decided, with the approval of the honorable Secretary of Agriculture, to establish these grain-testing laboratories at New Orleans, La., and Baltimore, Md., for the purpose of examining and reporting upon samples of grain submitted to them. A like laboratory was established at London, England, for the purpose of examining into the condition of American grain arriving at European ports.

From July 1 until October 1, 1906, the work was under the immediate direction of Mr. A. F. Woods, Assistant Chief of the Bureau, assisted by Mr. Edgar Brown, Botanist in Charge of the Seed Laboratory. On October 1, 1906, Mr. John D. Shanahan was placed in charge of the work.

Laboratory at Baltimore.—The laboratory at Baltimore during the past year has been in charge of Mr. L. A. Fitz, assisted by Mr. C. A. Neal. This laboratory, up to July 1, 1907, has examined and

reported upon upward of 1,200 samples of grain submitted to it, including samples of all shipments for export from that market.

LABORATORY AT NEW ORLEANS.—The laboratory at New Orleans during the year has been in charge of Mr. Clyde E. Leighty, assisted by Mr. W. P. Carroll. Upward of 1,000 samples have been submitted to and examined in this laboratory.

LABORATORY AT LONDON, ENGLAND.—The laboratory at London, England, was in charge of Mr. E. G. Boerner, who visited twenty-five of the principal European receiving ports for American grain, each point being visited from one to sixteen times. He personally examined 88 cargoes of American grain and analyzed 216 samples, in addition to which he received reports on 66 other cargoes, some of which were not accompanied by samples, a total of 154 cargoes and 270 analyses.

RESULTS ALREADY ACCOMPLISHED.—The examination and analysis of samples consists of determinations on a percentage basis of practically all the factors considered by grain inspectors and dealers in fixing the grades of grain, including the proportion of sound kernels and of the different kinds of defective and damaged kernels, the quantity of dirt and foreign material present, and the moisture content. The results of this work have been tabulated by ports and markets, months, and inspectors' grades. Many valuable and interesting facts are shown in these tabulations.

Much valuable information bearing upon the question of commercial grain grades, their value, stability, and usefulness, has been obtained. Mr. Shanahan has visited every principal grain market and export point in the United States for the purpose of studying the conditions prevailing in each, and much important information has been gathered. Valuable assistance has been rendered by the inspection authorities at Baltimore and New Orleans, as well as by those of other grain markets in the country. European buyers of our grain have also cooperated in the work of the European laboratory.

An appreciable influence has been wielded through this work toward the better understanding of the values of grain grades and a fair and honest inspection of the same. During the year the apparatus developed in this Department for the quick testing of moisture in grain has been adopted by the principal inspection departments and is being used by them, as well as by many large and small handlers of grain throughout the country, to the mutual advantage of all concerned.

PLANS FOR FUTURE WORK.—During the last session of Congress the appropriation for this work was increased from $15,000 to $40,000, and the law was changed so as to allow the establishment of grain-testing laboratories at such other grain markets, as well as export points, as might be deemed expedient. It was decided to maintain the existing laboratories at Baltimore, Md., and New Orleans, La., and in addition to establish one each at St. Louis, Mo., Minneapolis, Minn., Duluth, Minn., and New York, N. Y., with a general research laboratory at Washington, D. C.

The general work of grain standardization will continue in charge of Mr. John D. Shanahan, assisted by Dr. J. W. T. Duvel, in charge

of laboratory methods. The Baltimore laboratory has been placed in charge of Mr. C. A. Neal; that at New Orleans in charge of Mr. W. P. Carroll; St. Louis, in charge of Mr. Clyde E. Leighty; Minneapolis, in charge of Mr. E. G. Boerner; and Duluth, in charge of Mr. L. A. Fitz. Mr. Boerner will retain charge of the Minneapolis laboratory until the autumn or winter, when he will again take up his work in Europe, in connection with the examination of export grain from the United States.

The work during the coming year will be on much the same lines as that carried on during the year just passed, although the work in the field laboratories will be somewhat simplified and that of research largely left to the Washington laboratory. Substantial progress has been made during the past year toward an understanding of the requirements for commercial grain grades, which it is hoped to increase during the present year. The problem of kiln-dried or artificially dried corn will have attention, with a view to discovering, if possible, why corn that has been so dried and contains the same amount of moisture does not remain in transit or in storage in as good condition as corn that has not been so treated.

The development of a method for determining accurately the quantity of dirt and foreign matter in grain, commonly known as "dockage," will also receive particular attention; also, the development of apparatus for thoroughly mixing samples of grain for laboratory purposes and special apparatus for handling the grain standardization problem.

It seems imperative, in order to get at a fair and reliable basis for wheat grades, to take up the matter of wheat and flour testing by the installation of an experimental flour mill, in order to ascertain the quantity of different products in different wheats and the amount and quality of gluten and other constituents of wheat upon which its values are based. It was intended to inaugurate this work during the present year, but on account of lack of funds the matter has been laid aside for the present.

DRY-LAND AGRICULTURE.

The work in Dry-Land Agriculture Investigations, which was organized during the preceding fiscal year with Mr. E. C. Chilcott as Agriculturist in Charge, has developed rapidly. The boundaries of what has been termed for convenience the Great Plains area have been so modified as to include the plains region of eastern Montana lying below the 5,000-foot contour. The general plans of the work described in the last report have been followed.

Correlation of the work of the various offices of the Bureau in the Great Plains area.—In the plan adopted and described in the report of the Chief of this Bureau for 1906, "the correlation of the cooperative work of the Bureau of Plant Industry in the Great Plains area of the West" was placed in charge of the Agriculturist in Charge of Dry-Land Agriculture Investigations. The results of the year show the wisdom of this plan. From the nature of the work of this office it does not encroach upon nor enter into competition with the work of other offices of the Bureau, but on the other hand it furnishes a field where many other lines of work may be carried on in close cooperation with its work on cultivation and til-

lage methods and crop rotations. Mr. Chilcott's long experience, gained from a residence of about twenty-five years in this area, together with his frequent visits to all parts of it, enables him to keep in close touch with the agricultural development of the country and often to give valuable suggestions to those having charge of more specialized lines of work in the planning of experiments requiring field tests, and to provide facilities for these specialists for carrying out their respective experiments. In this way specialists are relieved of much routine work in which they are not interested and left free to attend strictly to their specialties. The field assistants employed by the office of Dry-Land Agriculture Investigations are particularly well qualified to attend to the details of preparing the land for crops and other farm operations which require a thorough knowledge of cultivation methods.

Another important feature of this plan is that in all the negotiations with the State experiment stations for the establishment of cooperative work having a direct bearing upon agricultural development under dry-land conditions in the Great Plains area the Bureau is represented by one individual, through whom all cooperative negotiations are conducted. This tends to simplify and unify the cooperative work without in the least hampering those in charge of special lines of investigations.

In the case of independent stations for general investigations of the various problems associated with dry-land agriculture in the Great Plains area, not in cooperation with the State experiment stations, Mr. Chilcott will have general control and supervision of all such stations and will provide facilities for carrying on such specialized lines of work as those in charge of the various offices of the Bureau may desire. All the technical details of such specialized lines of work will be under the immediate control and supervision of the specialists having such work in charge.

STATIONS NOW ESTABLISHED IN COOPERATION WITH THE STATE EXPERIMENT STATIONS.—Wherever cooperation between the State experiment stations and the office of Dry-Land Agriculture Investigations is carried on, the land is furnished either by the local community under a long-time lease or by the experiment station, which also furnishes teams and ordinary farm implements and defrays the general operating expenses of the station, the office mentioned employing an expert for each such station, whose salary and traveling expenses are paid from the funds of the Bureau of Plant Industry. The States now cooperating through their State experiment stations in this important dry-land work are Montana, with one station; North Dakota, with three stations or projects; South Dakota, with one project; Nebraska, with one, and Kansas, with two. In addition to these there are in South Dakota the Bellefourche project; in Colorado, the Akron project, and in Texas, the Amarillo and the Dalhart projects. The investigations undertaken at these stations are necessarily of such a nature that some time will elapse before definite results can be announced.

As set forth in the last report, plans have been made to secure data which will be valuable in the matter of aiding people who are desirous of taking up lands in this important territory.

PHYSICAL LABORATORY.

The investigations of the Physical Laboratory, under the supervision of Dr. L. J. Briggs, have been directed during the past year mainly along the following lines:

(1) The measurement of the physical factors governing plant growth in the Great Plains area.

(2) The investigation of plant growth as influenced by the composition and concentration of the salts dissolved in the soil moisture.

(3) The determination of the soil conditions which will make the tobacco plant most resistant to the attack of the soil fungus Thielavia.

(4) Investigations in electro-culture.

PHYSICAL INVESTIGATIONS IN DRY-LAND AGRICULTURE.—The measurements which have been made of the physical factors influencing plant growth in the Great Plains area have been carried on in cooperation with the office of Dry-Land Agriculture Investigations in connection with the cooperative cultivation and rotation experiments. These measurements have for their object the determination of the influence of environmental factors at the different stations upon the growth and yield of the principal crop plants. Such observations when continued for a suitable term of years will show the normal conditions which prevail at representative stations throughout the area. Taken in connection with the cultivation and rotation experiments or with the cereal investigations, these observations will show what results may be expected under the observed conditions, while the special measurements made on the rotation and cultivation plots will show the actual merits of the different methods employed in conserving moisture and maintaining the humus content of the soil.

Observations are being conducted at present at Dickinson and Edgeley, N. Dak.; Highmore, S. Dak.; North Platte, Nebr.; Hays and Garden City, Kans., and Amarillo, Tex.; and stations will be established in the Judith Basin, Montana; Bellefourche, S. Dak., and Akron, Colo., during the coming year. Continuous automatic records of the temperature of the soil and air are kept at each of these stations. The humidity of the air and the evaporation from a water surface are also determined daily, and weekly measurements of the moisture content of the soil to a depth of 3 feet are made on representative plots of the different rotations. These observations will be extended as fast as suitable apparatus can be provided, and will be placed on a recording basis as far as practicable. A report embodying the results of the present season's work, together with a summary of the climatic conditions of the area as determined from the records of the Weather Bureau, will be published conjointly with the Office of Dry-Land Agriculture Investigations at the close of the season.

CENTRIFUGAL INVESTIGATIONS.—A powerful centrifugal machine has been constructed during the past year, by means of which it is possible to remove from a sample of moist soil a portion of the soil moisture with the dissolved salts which it contains and collect the same for analysis. The actual concentration of the various plant-food constituents in the soil moisture can thus be determined. This method has been used during the past year in a study of the rate at which nitrification and denitrification take place in soils under

different moisture conditions. A report on this subject will soon be ready for publication.

INFLUENCE OF SOIL CONDITIONS ON THE ATTACK ON TOBACCO BY THE SOIL FUNGUS THIELAVIA BASICOLA.—During the past year an investigation was begun by the Physical Laboratory, in cooperation with the Office of Tobacco Breeding Investigations, regarding the conditions favoring the attack on tobacco by the soil fungus *Thielavia basicola*. An examination of the infected fields showed that the attack of this fungus was most severe in fields which had been longest under cultivation and most heavily fertilized. Preliminary experiments in the greenhouse during the past winter also indicated that the resistance of tobacco to the attack of this fungus was influenced to a considerable extent by the quantity and character of the fertilizer employed. Fertilizer experiments on infected soils in the Connecticut Valley and in the greenhouses at Washington are now in progress to determine the influence of different kinds of fertilizers and methods of treatment of tobacco to make it more resistant to this fungus.

EXPERIMENTS IN ELECTRO-CULTURE.—The stimulation of plants by electricity has been advocated abroad from time to time as a practical means of increasing the yield and of hastening the development of crops. These claims are now being made the subject of field tests by the Physical Laboratory in cooperation with the Office of Plant Life History Investigations, the work being carried on at the Arlington Experimental Farm. The vegetables and grains being tested are planted under a wire network which is supported on insulators 7 feet above the ground. Similar plots on each side, which are not under the network, serve as controls. The network is charged a number of hours each day to a high positive potential by means of a mica-plate electrostatic machine. The experiments have not yet progressed sufficiently to make a definite report at this time. Experiments made during the past winter on the effect upon tobacco of a direct current passing through the soil showed no advantage in favor of such treatment.

WESTERN AGRICULTURAL EXTENSION.

The Office of Western Agricultural Extension Investigations, of which Mr. C. S. Scofield is Agriculturist in Charge, has continued the work of investigating agricultural conditions on the projects of the Reclamation Service of the Department of the Interior in the western United States. During the past year experimental work was begun on two of these projects, at Yuma, Ariz., and Fallon, Nev. In addition to the work on the reclamation projects the office has been charged with the management of an experimental farm near San Antonio, Tex., which was established by the Bureau of Plant Industry in 1904 in connection with the extension of the cotton-producing area in the Southwest and as a part of the campaign against the cotton boll weevil. A study has also been made during the year of the methods of farming without irrigation practiced in the Great Basin, which includes almost entirely the States of Utah and Nevada.

SAN ANTONIO, TEX., EXPERIMENT FARM.—The San Antonio Experiment Farm consists of a tract of 125 acres of land belonging to

the city of San Antonio. The farm is operated by the Bureau of Plant Industry under a cooperative arrangement with that city, Mr. F. B. Headley being employed by the Bureau as farm superintendent. The region around San Antonio is generally regarded as semi-arid. While the average annual rainfall amounts to nearly 30 inches, it varies considerably from year to year, so that farming without irrigation is considered precarious.

The experimental work on the farm has been largely with the staple crops of the region—cotton, corn, and sorghum. A large number of varieties of each of these crops has been grown under the best possible methods of tillage, the soil moisture being determined at frequent intervals to note the effect of the tillage and to determine the water requirements of the different varieties of crops used. Work has also been carried on at the farm for other offices of the Bureau. Extensive trials of varieties have been made for the Office of Seed and Plant Introduction, including work with a number of orchard fruits and ornamental plants; experiments in the acclimatization of cotton and corn have been conducted for the Office of Bionomic Investigations, and a number of varieties of cereals have been under experiment for the Office of Grain Investigations.

The results of the past year show that it is quite practicable to produce profitable crops of cotton even with the small amount of rain which fell last year, namely, 16½ inches. Under average conditions, with good methods of tillage excellent crops can be produced every year. A part of the farm has been badly infested with Johnson grass, and the work of the past year shows that it is entirely practicable to eradicate this in a single season by thorough and continued tillage.

Work at Yuma, Ariz.—For the past five years this Bureau, through one or another of its offices, has been conducting crop experiments at Yuma, Ariz. Early in the past fiscal year the work was more definitely organized, Mr. W. A. Peterson being placed in charge. A tract of about 6 acres of land belonging to the Reclamation Service was placed at the disposal of the Bureau, and a tract of 10 acres on the Yuma mesa was leased. This mesa is a high, gravelly bench of land about 60 feet above the Colorado River Valley. A tract of 15 acres of land was also leased in the valley west of the town of Yuma. During the past year practically all of this land has been put into crops. The land on the mesa is devoted to cotton and miscellaneous fruit crops, in cooperation with the offices of Bionomic Investigations and Plant Life History Investigations of this Bureau. The land in the valley is devoted to experiments with cotton, corn, sorghum, alfalfa, and miscellaneous forage crops, in cooperation with the offices mentioned, with that of Alkali and Drought Resistant Plant Breeding Investigations, and with other offices of the Bureau.

Bermuda grass is a very serious pest on the valley land near Yuma, and in addition to the experimental work outlined considerable attention has been given to a study of the life history of this plant. It is hoped that methods of combating it may be found which will be as successful as those applied to Johnson grass in Texas. The plant seeds freely at Yuma and is thus spread rapidly by irrigation water and in other ways. It is very difficult to eradicate it from the heavier types of soils.

EXPERIMENTS AT FALLON, NEV.—The Fallon Experiment Farm on the Truckee-Carson project of the Reclamation Service is located in the Carson sink, 6 miles north of Carson Lake, in one of the most intense deserts of the United States. Work was begun in the autumn of 1906 and is being conducted in cooperation with the Nevada Agricultural Experiment Station. The crops under experiment are cereals, alfalfa, sugar beets, leguminous forage, and green manure crops, sorghum, corn, and grasses for pasture and hay. Considerable difficulty is being experienced in subduing the raw desert soil and getting it into crops, and the work is still too new to justify any statement of results. Additional land will be prepared for irrigation during the current year, and experiments with the staple crops will be continued.

DRY FARMING IN THE GREAT BASIN.—During the early part of the fiscal year Mr. Scofield made a trip into the Great Basin to investigate the methods used in farming without irrigation in that region, and the results of this investigation have been published in Bulletin No. 103 of the Bureau of Plant Industry. It was found that farmers there have learned the use of tillage methods by which successful farming with wheat and alfalfa is entirely practicable with a rainfall of about 15 inches a year. This line of investigation is believed to be highly important in connection with the development of agriculture on the Government irrigation projects. Many of these projects are located in regions where the nonirrigable lands are capable of being farmed in connection with the irrigated land, and it is thus possible to utilize large areas around these projects that could not be used without the irrigated nucleus.

PLANS FOR FUTURE WORK.—During the current year experimental work will be continued at San Antonio, Yuma, and Fallon, and another experiment farm will be started on the Bellefourche irrigation project, near Bellefourche, S. Dak., in cooperation with the Office of Dry-Land Agriculture Investigations, the use of the land having been granted by the Department of the Interior. Arrangements have been made by which the Bureau of Soils and the Office of Irrigation and Drainage Investigations of the Department of Agriculture will cooperate in the work at Bellefourche. It is also proposed to investigate the methods of dry farming in other parts of the western United States.

FORAGE-CROP INVESTIGATIONS.

The work on forage crops, of which Prof. C. V. Piper is Agrostologist in Charge, has been continued along three main lines: (1) The extension of such forage crops as deserve wider utilization in agriculture; (2) the introduction and testing of new or little-known forage crops; and (3) the securing, by breeding and selection, of improved varieties of the standard forage crops, such as alfalfa, timothy, and various other grasses.

A system has been inaugurated of inclosing with each package of seed distributed in cooperative work a card showing its purity and germination record. No seed containing dangerous weed seeds is distributed.

Following is a brief outline of the principal lines of work conducted during the past fiscal year.

ALFALFA.—The work with alfalfa has been conducted by Mr. J. M. Westgate, Assistant Agrostologist, assisted by Mr. Nickolas Schmitz. Much attention has been given to the agricultural extension of this crop in the East, where its successful culture is attended with greater difficulties than in the West. Cooperative experiments have been conducted during the past year with about 500 farmers, as well as with many experiment stations. In all cooperative work with farmers the experiments are conducted along lines laid out by this office. The cooperators have shown great enthusiasm in the work, and have devoted considerable time and money to the success of the experiments.

Great difficulty has been found, especially in some of the Middle Atlantic States, in securing successful inoculation. Whether this is due to the plant, to the germs not being adapted to the particular soils, or to some other factor remains to be determined. A series of experiments based on the results of the past season will, it is believed, result in the definite solution of these problems. In practically every case where good inoculation was secured the field has proved a success. It is believed, however, that in the greater portion of the East alfalfa fields can be maintained satisfactorily for only a short period of years, principally owing to the cumulative effect of weeds.

Among the introduced varieties of alfalfa the Arabian is proving very valuable in the Southwest. This variety is characterized by its large leaflets and hairiness, as well as by its exceedingly rapid growth. In southern California six cuttings of this variety were obtained before July 1, while in the adjoining field of ordinary alfalfa only four cuttings were obtained. The Arabian variety yields slightly less in weight to the cutting, but gives a greater total yield during the season. In Maryland and North Carolina during the past winter this variety was winterkilled. In South Dakota a large percentage of the plants perished the first winter, but the surviving plants have since remained uninjured for two winters and exhibit marked superiority over ordinary alfalfa. Arrangements have been made for the growing of quantities of seed in southern California, so that a supply may be available in the near future. Only very limited quantities of seed can be secured from Arabia.

Siberian alfalfa, which is probably a species group allied to *Medicago falcata*, has recently been obtained by Prof. N. E. Hansen in northern Siberia, where the rainfall is scant and the winter climate very severe. The small quantity of seed that was obtained is being carefully tested in South Dakota, and this variety is being grown at Pullman, Wash., and a few other localities for the purpose of securing a sufficient quantity of seed for thorough testing. It is believed that these forms will be found valuable for northern regions, where the winters are severe and the rainfall limited.

A new method of propagating alfalfas has been developed. This consists in multiplying a selected individual by vegetative methods, so that a great number of plants can be rapidly propagated. These, when grown in an isolated location, will then come true unless the vegetative parent is variable. In connection with the field work, a large number of individual plants have been selected, the most valuable of which are being developed into pure strains. Work of this type is being conducted at Chico, Cal., Pullman, Wash., and at the

Arlington Experimental Farm, in Virginia. A number of experiment stations have also undertaken work along the same line. Experiments in the growing of alfalfa in rows, to admit of surface tillage, have been continued and extended in the semiarid sections with promising results, especially as regards seed production.

GRASSES.—There is an increasing demand in many parts of the country for better grass combinations for both meadows and pastures. Cooperative experiments along these lines are being conducted with a large number of farmers under the direction of Mr. R. A. Oakley, Assistant Agrostologist, assisted by Mr. H. N. Vinall. In connection with this work an effort is being made to extend the culture of many promising grasses at present little known by farmers. The greatest call for assistance of this kind comes from the South and the arid regions of the West. In the extreme South special efforts have been made to extend the culture of Para grass, Guinea grass, and Natal grass, all of which are well adapted to the Gulf coast region. These three grasses promise in a large measure to meet the requirements of that portion of the country. Entirely satisfactory grasses for the arid regions have not yet been secured. In the northern portions of the Great Plains area much success has attended the use of brome-grass. Apart from this the best results have been obtained with two native western grasses, namely, slender wheat-grass and western wheat-grass, both of which are markedly drought resistant. There has also been a great deal of interest in *Paspalum dilitatum*, a South American grass, which has proved exceedingly valuable in Australia and is abundantly naturalized in our Southern States, where, however, good seed can not be produced. It is probable, judging from preliminary experiments, that this grass will be found valuable in many sections of the Southwest. It will not withstand severe cold, however, winterkilling at Washington, D. C., and seldom occurring spontaneously north of Tennessee and North Carolina.

One of the most important lines of work in connection with the true grasses is the development of improved varieties by selection. This work was first inaugurated with timothy by Dr. A. D. Hopkins, all of whose selections were presented to the Department. The three most important of these varieties, namely, the "Hopkins" or "Early," the "Stewart," and the "Pasture," have been tested fully, and considerable quantities of seed will be available this year for cooperative experiments with farmers. Two other selected timothies have likewise proved so valuable that their seed will be grown in quantity. Along this same line much selection work has been done with brome-grass, orchard grass, and redtop. Several of these selections are so promising that seed will be grown for distribution as soon as possible.

COWPEAS.—The ruling high prices for cowpea seed during the past few years have militated greatly against the more extensive use of this crop, the most valuable for the Southern States from the standpoint of soil improvement. The principal cause of the high price of seed is the fact that most of it is picked by hand. It has been demonstrated that by the use of bean harvesters or of self-rake reapers the loss of seed is very small, and with especially constructed thrashers less than 5 per cent of the seed is cracked. By cooperation and other-

wise an endeavor is being made to stimulate the extensive growing in specially favorable localities of cowpea seed by the utilization of machinery.

VETCHES.—An extensive and critical series of agronomic tests with all the species of vetches obtainable has been conducted during the past two years. The most important result is the finding of a valuable species (*Vicia dasycarpa*) that matures two or three weeks earlier than common vetch, thus permitting it to be used in rotation where common vetch is too late. *Vicia dasycarpa* is even earlier than crimson clover. As soon as seed can be grown in quantity this species will be extensively introduced. Special efforts are also being made to stimulate the growing in this country of hairy vetch seed, which at present is imported.

NEW FORAGE CROPS.—A new soy bean from Manchuria, which has been named the "Meyer," has yielded seed at the rate of 24 bushels to the acre, outyielding any other variety grown on the Arlington Experimental Farm. In view of the fact that the culture of soy beans as a grain crop has been decreasing in this country because the yield averages only 12 bushels to the acre, this new variety is of great promise.

Further extensive tests with the Tangier pea (*Lathyrus tingitanus*) have emphasized the value of this plant as a green manure crop both in California and the Southern States. Under certain conditions a small amount of a poisonous substance occurs in this plant, so that caution must be observed in using it as fodder. Large quantities of seed have been grown for distribution.

Guar (*Cyamopsis tetragonoloba*), an East Indian legume, has proved to have remarkable drought-resistant properties, much exceeding in this respect even the sorghums. Owing to its habit, the seed crop can be easily harvested and thrashed by machinery. This crop has proved of very high promise for the dry region of the Southwest and extensive experimental plantings of it have been made.

FIBER INVESTIGATIONS.

The work in fiber investigations, in charge of Mr. L. H. Dewey, Botanist, has been hampered somewhat during the past year by general office routine, which has required a large amount of time and attention and has prevented undertaking some of the field work that had been planned.

FLAX.—An investigation of the flax-fiber industries in Michigan, Wisconsin, and Minnesota was made in the early autumn of 1906. The most important features observed in this industry were the remarkably ingenious methods and devices which are being put into commercial practice for making binder twine from flax fiber, and the decreasing production of flax for fine spinning fiber. Flax binder twine, owing to the flexibility of the fiber, was found to withstand a greater strain at the knot than hard fiber twine. In one of the plants visited the straw, constantly moving, is thoroughly dried as a substitute for retting. This process of drying is followed by a series of automatic machines for thrashing and cleaning the seed, breaking, scutching, hackling, drawing, and spinning, and winding the twine in balls ready for delivery, the clean seed being

run into bins or directly into cars for shipment and the hurds and trash blown to the furnace. In the other plant, freezing takes the place of retting, and this is followed by a series of machines performing work similar to the other. All the flax used at these mills is grown under special contract and under the direct supervision of representatives of the companies. This is one of the most hopeful features, as the farmer is being educated to give special attention to the development of an improved quality of straw.

HEMP.—The cultivation of hemp is being continued at Northfield, Minn., where it is water retted by a modified form of the Loppens system and the fiber cleaned by machinery. The hemp fiber thus prepared is more nearly like Italian hemp than that prepared by dew retting. In Kentucky a substitute for dew retting is being introduced, consisting essentially of submerging the dry stalks about twenty minutes in the liquid waste product from oil refineries. When taken out of this bath and dried, the stalks are ready for breaking. A very strong fiber is produced by this method and it seems likely to do away with the tedious, uncertain, and unsatisfactory process of dew retting.

Many small samples of hemp seed imported from Manchuria by the Office of Seed and Plant Introduction are being cultivated in several localities to determine the relative merits under different conditions of the seed thus produced.

About 10 acres of hemp from Kentucky seed are being grown this season (1907) at Hanover, Pa., to determine whether hemp may be cultivated profitably in that locality. This hemp will be harvested and the fiber prepared by the most improved methods available.

ZAPUPE AND TEQUILA.—Reports having been received from Mexico indicating that the zapupe and tequila plants of that country might be valuable for introduction into our tropical islands, or even into the warmer parts of the States, an investigation was made in the fields where these plants are now cultivated. It was found that there are two distinct species of zapupe, both quite distinct from the henequen of Yucatan or the sisal of the Bahamas, with which they have been confused. One with green leaves, called "zapupe verde," has long been cultivated for fiber by the Indians of Tantoyuca, northern Vera Cruz, and within the past ten years it has been introduced extensively into cultivation in the vicinity of Victoria, Tamaulipas. It is a slender-leaved agave, but its specific identity has not been determined. The other, with bluish glaucous leaves, called "zapupe azul," is cultivated most extensively in the region around Tuxpam, Vera Cruz. It was introduced there and seems to be identical with "tequila azul" (*Agave tequilana*), which is cultivated extensively for the production of tequila wine in western Jalisco.

Three distinct species of tequila plants were found in cultivation in the region west of Guadalajara, Jalisco. They are known as "tequila azul," "chato," and "mano largo," and are cultivated primarily for the production of the so-called tequila wine, which is distilled from the short, thick trunks of the mature plants. The leaves are cut incidentally, to avoid injury from the sharp spines when cultivating the fields, and on some plantations these leaves are used for the production of fiber. The yield of dry, clean fiber, ranging from 2.1 per cent for tequila azul to 2.5 per cent for chato, is too

small to warrant the cultivation of the plants for the production of fiber alone. The fiber from the two zapupe and three tequila plants is all similar in character, and quite different from that obtained from the pulque-producing maguey plants of central Mexico. It is of good strength, similar to sisal, but finer and more flexible.

A small number of zapupe verde plants, the most promising of the series, have been sent to the experiment station at Mayaguez, P. R., to be grown for comparison with the sisal and henequen there. Further introduction is not recommended until the results of this trial are known. This variety, which is cultivated farther north than the others, is injured by slight frosts at Victoria quite as much as henequen introduced there from Yucatan.

THE CLASSIFICATION OF COTTONS.—The collection of information for the accurate description and classification of cultivated varieties of cotton has been pushed forward by Mr. Fred. J. Tyler. During the cotton-maturing season of 1906 he visited the experiment stations and plantations where distinct varieties are cultivated, securing specimens and photographs of typical plants, and also very full detailed descriptions and information as to history and development of varieties, throwing much light on relationships and confused synonymy. Strength tests, based on the breaking strain of 20 separate fibers in each case, have been made for more than 500 samples of lint. These tests of the strength of fiber compared with similar tests of lint of the same varieties during the previous two years indicate more strongly than ever the importance and value of this method of securing accurate information regarding the strength of cotton fiber of each variety under observation. A report on the geographic distribution of varieties of American Upland cotton is now nearly ready for submission.

SEED LABORATORY.

The work of the Seed Laboratory, under the direction of Mr. Edgar Brown, Botanist in Charge, has more than doubled during the past year. The number of samples of seed received was 20,452, as compared with 7,261 the previous year. Before the separate organization of the work on grain standardization along the lines previously suggested, much time was spent in arranging for the establishment of the grain-testing laboratories at New Orleans and Baltimore. Dr. J. W. T. Duvel, who with Mr. Brown perfected the apparatus for the rapid determination of moisture in grain, has been transferred to the Office of Grain Standardization and given charge of laboratory methods.

SEED TESTING.—The number of samples received from farmers and seedsmen for test has increased from 2,622 for the year 1905–6 to 4,315 for the past year. Both vegetable and farm seeds were included among them, but the majority of them were grass, clover, and alfalfa seed.

Reports on the tests of these samples have been sent out as promptly as possible. Those on mechanical purity have usually been sent in from two to three days from the time the samples were received, and the reports on germination in from one to four weeks, according to the kind of seed and the time required to make the test.

All lots of seed, except flower and vegetable seeds in packets, distributed through the Bureau of Plant Industry are now accompanied

by a memorandum showing the mechanical purity and germination of the seed, attention being called to any weed seeds present. During the year 1,651 samples of seed intended for distribution have been sent to this laboratory for testing. Most of these have been tested both for purity and germination.

ADULTERATED SEED.—In August, 1906, Circular No. 20 of the Office of the Secretary was published, giving the analyses of samples of alfalfa seed bought in the open market in the spring of 1906 and found to be adulterated. During the spring of 1907 samples of seed of red clover, Kentucky bluegrass, alfalfa, meadow fescue, and *Bromus inermis* to the number of 1,869 have been obtained in the open market and examined for the presence of adulterants. Of the 1,240 samples of red clover and 71 samples of alfalfa seed none was found to contain as much as 5 per cent of yellow trefoil seed. It is no doubt largely due to the work of this laboratory that the adulteration of these important farm seeds has stopped. A few samples of meadow fescue and *Bromus inermis* were found to contain the seed of cheat. Kentucky bluegrass seed was still found to be adulterated to a considerable extent. Of the 396 samples secured, 99 were found to contain seed of or to consist entirely of seed of Canada bluegrass. The close resemblance between the seeds of Kentucky bluegrass and Canada bluegrass is no doubt the reason for the frequent substitution of the seed of one for the other. At the time the work on adulterated seeds was begun it was criticized severely by many seedmen. Since the object in view and the results which have been accomplished have become better known, however, the trade has come to feel that it is quite as much to the advantage of reputable seedsmen as of farmers. The interest aroused in this work has no doubt been in a large measure responsible for the attention given to seed testing and seed legislation in many States during the past year.

A careful examination was made of the orchard grass seed-producing section to determine to what extent the seeds of meadow fescue and the rye-grasses were harvested with those of orchard grass. Nowhere were conditions found that would indicate the possible presence of these seeds in any quantity.

IMPORTED SEEDS.—Of the seeds used as adulterants the amount of yellow trefoil seed imported has been small, but the usual quantity of Canada bluegrass has come in from Canada. In all, 1,238 samples, each representing an importation of grass or forage-plant seed, have been received from custom-houses. An unusually large quantity of red clover and alfalfa seed has been imported, many of the lots being screenings of no value for seed purposes. It is time some means were taken to prevent the importation of worthless seed which has no sale in the country exporting it.

SEED VITALITY.—The experimental work on the vitality of seed corn has been continued in Illinois. About 5 acres were planted in the spring of 1907 to determine the comparative yield from seed which gave strong and weak sprouts in the germination test.

In response to a circular letter and for other reasons 4,031 samples of seed corn were sent in, and these were tested for germination and report made to the persons sending them. About half of them represented single-ear tests, while the other samples were taken from

the bulk seed saved for this year's planting. The germination of these samples was surprisingly high, showing that the average quality of the seed corn this year was good.

The vitality of cowpea seed was known to be low on account of the wet weather during the autumn of 1906. Of 3,825 samples of seed from North Carolina, South Carolina, Tennessee, Georgia, Florida, Alabama, Mississippi, Louisiana, and Arkansas tested and reported on, the average germination was 60.5 per cent. The seed of only four varieties—Iron, New Era, Taylor, and Whipporwill—and from only four States—Arkansas, Tennessee, Louisiana, and Florida—had an average germination of 60 per cent. The information furnished farmers as to the quality of their seed when it is as poor as it has been this year is of special value.

The quality of vegetable seeds put up in packets and sold by stores on commission has often been called in question, and in order to get some definite information 3,523 packets of these so-called commission seeds were purchased and are being tested for germination. The tests which have been completed show that many of them are of low vitality.

Seed studies.—In continuing the study of certain groups of seeds special attention has been given the dodders which infest cultivated crops. A Farmers' Bulletin containing the result of this work has recently been issued. Farmers' Bulletin No. 260, "The Seed of Red Clover and Its Impurities," was also published during the year.

Plans for future work.—During the fiscal year 1908 the work will be carried on along lines similar to those of the past year. The investigation of adulterated seeds will be continued. As heretofore, examinations will be made of all samples submitted for information as to the presence of adulterants. Detailed tests for mechanical purity and germination will be made as far as possible whenever requested. The so-called "hard seeds" in alfalfa and red clover will be tested both in germinating chambers and in the field to determine how far such seeds are of value in farm seeding. As fast as possible the vitality and weed seed content of commercial seeds, with special reference to the kinds of weeds most troublesome in the principal crops in different sections, will be given more attention. The seed production of forage crops will be studied with reference to methods of harvesting, curing, and storing. An examination of seed-producing areas will be made to determine the extent to which certain other plants the seeds of which are used as adulterants occur in the fields.

FOREIGN SEED AND PLANT INTRODUCTION.

As in previous years, the foreign seed work has continued under the immediate direction of Mr. David Fairchild. During the year more than 2,000 varieties of seeds and plants have been secured by agricultural explorers and correspondents of the Bureau in foreign countries for trial in the United States, and satisfactory progress has been made with many of the importations of previous years.

Agricultural explorations of the year.—The most difficult and dangerous agricultural exploration work yet accomplished by the Bureau of Plant Industry has been carried forward this year by

Mr. Frank N. Meyer, agricultural explorer, who has crossed and recrossed the mountains of northern Korea and southern Manchuria. Notwithstanding many obstacles Mr. Meyer successfully collected and shipped in living condition to this country a great number of interesting and prospectively valuable seeds and plants. Among the 993 scions and seeds which he sent may be mentioned wild apricots from trees 10 feet in circumference in northern Korea; Siberian, Korean, and Manchurian sand and bush cherries; north Chinese oaks; the Chinese pistache; five large-fruited jujubes, a hardy new fruit worthy of a thorough study by Americans; wild persimmon stocks; an edible-fruited hawthorn; wild grapes from the region west of Vladivostok; the Chinese actinidia, a new fruit-producing vine; collections of wild and cultivated pears from regions climatically similar to the Middle States; seed of the famous Manchurian hemp; varieties of the opium poppy; Siberian roses; two new "red" blackberries; a cultivated peach from Kirin, perhaps the most northern limit of its culture in the Orient; the dry-land rices of Manchuria, which are cultiyated in a climate similar to that of the Dakotas; and a large number of ornamental trees and shrubs of especial interest to the nurserymen of the Middle States, where the Himalayan and European conifers and other ornamentals have not proved hardy.

By means of a cooperative arrangement between the Bureau of Plant Industry and the Arnold Arboretum, Mr. E. H. Wilson, the well-known explorer of central China, who is in the central provinces of China collecting seeds and plants for the Arboretum, will collect for the Bureau such seeds and plants as are of a purely agricultural character in exchange for material which Mr. Meyer is authorized to obtain for the use of the Arboretum. Word has been received from Mr. Wilson, from Ichang, that he is securing sorghums, wild forage plants, medicinal plants, and cereals from the interior provinces, and he has already shipped seeds of three promising new raspberries and a high-altitude, broad-leaved bamboo.

Prof. N. E. Hansen, of the South Dakota Experiment Station, made for the Bureau a trip through northern Norway, Sweden, and Finland, extending it through Siberia and returning by way of Japan. He discovered a hardy Siberian alfalfa, described later, and obtained in Moscow varieties of alcohol potatoes. His collections also include many new varieties of timothy; a mountain clover from the Russian steppes; pedigreed oats from the Swedish seed-breeding establishment at Svalöf, and collections of selected barleys from the same source; selected red fescue and redtop from Lapland, and interesting collections of forage grasses and hardy grains from agricultural experiment stations in Sweden, Norway, and Russia.

Matting rushes.—In the interest of the matting industry, which now costs the country $5,000,000 each year, and for American manufacturers who have perfected looms but who find it difficult to import the raw material even in small quantities, Mr. John H. Tull, special agent, was sent to the Orient, where he succeeded in securing a stock of the young rush and sedge plants for experimental plantings in the South. Although considerable attention has been given to this problem, heretofore the small number of plants at our disposal has prevented the making of any satisfactory tests, but the stock now on

hand will render it possible to inaugurate a thorough trial the coming autumn. An experimental area of seedlings already planted in Texas has not yet been harvested, so that the results with this material are still uncertain.

MALTING BARLEYS.—In an endeavor to ascertain the exact requirements of a good malting barley, an investigation of the barley kernel has been inaugurated. The great importance in the malting process of that part of the grain known as the scutellum has been shown, pointing to the fact that it is the chief malting organ of the kernel, excreting the diastase that breaks down the starch of the endosperm and preparing it for the mash tub. A careful comparison of the form and other characters of this organ is being made, and field tests of imported and home-originated pedigreed barleys are under way. It is believed that by means of this biological analysis of the barley kernel we shall be able to bring order out of the chaos that now exists in the whole malting barley industry of the country.

ALCOHOL POTATOES.—A beginning has been made in the investigation of the alcohol-potato question by the introduction of four varieties of these coarse, heavy, starch-producing potatoes from Moscow, Russia. These are sorts adapted to the steppe region of Russia, and are therefore believed to be promising for our Great Plains. They will aid in ascertaining whether it will be profitable for our farmers to grow a special alcohol crop.

MISCELLANEOUS INTRODUCTIONS OF THE YEAR.—Roots of the Persian and the Grecian licorice have been secured for trial in the South, where an attempt is being made to establish an American licorice industry. The tung-shu, or wood-oil tree, from Central China has shown itself capable of a very satisfactory growth in the Gulf States, and new shipments of seeds have been made from Hankow. It is from the nuts of this tree that one of the most valuable drying oils of commerce is made, and the imports of the oil to America are increasing rapidly. Varnish manufacturers are already deeply interested in the prospect of a home production of this oil.

Promising wet-land root crops, related to the dasheen of the South, have been introduced and assembled into variety collections in Florida. We have now the largest collection of varieties in the world and will soon be ready to give these great food and alcohol-producing plants a fair test as new crops for wet lands in the South on which no culture is now located. For the rice planters and breeders of the South we have imported the wild Schilluk rice from the Sudan; eleven named sorts from Calcutta, India; and the early-maturing, or hundred-day, rices from Japan, which latter, according to Japanese rice planters in Texas, are likely to give a crop when later varieties like the Kiushu and Honduras fail.

PROGRESS WITH FORMER INTRODUCTIONS.—Of the introductions made in former years which have during the past season shown especial promise of success may be mentioned berseem, which is slowly winning a place for itself as an annual irrigated winter forage and cover crop in the Southwest; the introduced Indian mangoes, several of which have fruited in Florida the past season; the Kafir plum tree, which bids fair to be a valuable shade and windbreak tree in southern California; the Algerian soap tree, which has proved adapted to

Florida conditions; and the Japanese udo, which has proved a hardy, cheaply grown vegetable from Nova Scotia to the Carolinas.

The valuable Indian bamboo (*Bambusa tulda*), from which the best bamboo timber is made, has, notwithstanding its poor traveling qualities, been successfully established in our greenhouses and will be distributed to Florida, the Canal Zone, Porto Rico, and Hawaii. The efforts being made to grow the delicious mangosteen on the Canal Zone, where the climate and soil conditions are suitable, have been supplemented by the introduction from the Malayan region of several relatives of this weak-rooted fruit tree which may serve as stocks on which to graft it.

The Kentucky hemp growers have been supplied with and are now testing the second generation of seed imported from Kirin, Manchuria, the home of the finest hemp in the world, and five selected varieties of the Manchurian hemp will soon be received from Mr. Meyer, our explorer. An importation of the roots of the Egyptian matting sedge samar will enable our experimenters to determine whether this plant, which in Egypt serves the double purpose of aiding in the reclamation of alkali lands by irrigation and in the manufacture of cheap matting, will find a profitable place in the agriculture of the Southwestern States.

VEGETABLE TESTING GARDENS.

The work of making accurate tests and records of variations in garden vegetables has been continued, as heretofore, under the direction of Mr. W. W. Tracy, sr., Superintendent. A bulletin giving full and accurate descriptions of the varieties of beans offered for sale by American seedsmen, including dwarf, pole, and Lima varieties, has recently been issued, and a similar one on radishes and beets is in preparation.

Scope of the work.—Trials and records have been made under the immediate direction of this Bureau at Pullman, Wash., Chico, Cal., and on the Arlington Experimental Farm, and many similar trials made by others have been visited and carefully studied, notably those at New Brunswick, N. J., Doylestown, Pa., Detroit, Mich., Columbus, Ohio, and Lincoln, Nebr. Locations where large crops of some particular vegetable are grown, such as Norfolk, Va., Swedesboro, N. J., Rockyford, Colo., and other points, have also been visited and the varieties and different stocks carefully studied. A large amount of data concerning the adaptation of sorts to special conditions and uses, as well as regarding the quality of the stocks commonly sold by seedsmen, has been obtained. It is thought that this material can be so arranged and published as to make very evident the importance of selecting the sort best suited to local conditions and requirements and of using seed in which the qualities of that sort are well fixed.

Special studies.—The study of the effect which the climate and soil where the seed is grown have on the character of the plants grown from such seed has been continued, and while it is not yet complete, satisfactory progress has been made and most interesting and practical results are anticipated. These studies are chiefly confined to sweet corn and cabbage.

CONGRESSIONAL SEED DISTRIBUTION.

The regular Congressional distribution of seeds and plants during the past season included vegetable, flower, cotton, and lawn-grass seed, bulbs, grapevines, and strawberry plants; and in addition to these were distributed limited quantities of selected tobacco seed and hybrid citrus trees. The work of packeting, assembling, and mailing the vegetable and flower seed was awarded under contract to the Brown Bag Filling Machine Company, of Fitchburg, Mass., at $1.14 per thousand packets. The work was begun on November 5, 1906, and completed on April 20, 1907, involving the putting up of 31,821,505 packets of vegetable seed and 4,527,450 packets of flower seed.

Tobacco seed.—The tobacco seed distributed during the past season was specially selected by Mr. A. D. Shamel, Physiologist in Charge of Tobacco Breeding Investigations, and was sent out under special arrangements to those persons who were interested in securing the best types of the several varieties, as well as of new and improved varieties. All requests for such seed have been complied with and not only have the persons interested been benefited but the Department has secured valuable cooperators for further experimental work.

Cotton seed.—The cotton seed distributed was selected by Dr. H. J. Webber, then Physiologist in Charge of Plant Breeding Investigations, and included seed of standard varieties, as well as improved types and new varieties which had been developed under his direction by breeding and selection. In addition to this seed, small quantities of wilt-resistant varieties of cotton developed by Mr. W. A. Orton, Pathologist, were distributed to sections where cotton wilt is prevalent.

Lawn-grass seed.—The customary distribution of lawn-grass seed was made. Seed of Bermuda grass was sent to the Gulf States and the Southwest, as this seed has been found to give the most satisfactory results in those sections. To other localities a mixture of Kentucky bluegrass, redtop, and white clover was sent. A total of 14,308 packages of grass seed was sent out.

Bulbs.—It having been decided to distribute fall-planting bulbs, specially selected varieties of hyacinth, tulip, and narcissus bulbs were procured from Holland and put up in boxes each containing 20 bulbs of assorted varieties. Some American-grown narcissus bulbs were also secured and distributed. The total number of boxes distributed was 9,938.

Citrus trees.—Varieties of the new hardy organges, or citranges, developed by Dr. H. J. Webber, were distributed in limited quantities. Many of the trees were too small to distribute and arrangements were made to carry them over until next season, when they will be ready for replanting.

Miscellaneous distribution.—In view of the gratifying results obtained from a former distribution of several varieties of vegetable seeds in Alaska through Prof. C. C. Georgeson, director of the Alaska Experiment Station, a similar distribution was made during the past season, including additional varieties suited to local conditions. This

distribution will be continued next year and will include, at the suggestion of Professor Georgeson, several varieties of flower seeds.

Special collections of vegetable and flower seeds have been sent from time to time to the Philippine Islands for use at army posts and elsewhere. Similar collections have also been made up and sent to the Canal Zone, with a view to raising vegetables for the use of the Americans employed on the Isthmus.

FIELD LABORATORIES AND GARDENS.

As previously mentioned in this report, the Bureau of Plant Industry now has three field stations, or laboratories, where special investigations are conducted. The oldest of these laboratories is located at Miami, Fla., and it is here that our tropical and subtropical fruits are tested, propagated, and disseminated. Important investigations are carried on at this place also with various diseases affecting tropical and semitropical crops.

The gardens at Chico, Cal., have now developed into an important branch of the Department. They are well located, and the climate is exceedingly favorable for the rapid handling and propagation of many crops suited for a large portion of the United States. During the year a change in the personnel of the garden was made by the resignation of Mr. P. H. Dorsett and the placing in charge of Mr. August Mayer, who was sent from Washington.

SUBTROPICAL LABORATORY AND GARDEN AT MIAMI.

During the past fiscal year the work at the subtropical laboratory and garden, at Miami, Fla., has been seriously affected by unfavorable climatic conditions. On October 18, 1906, Miami and its vicinity were visited by a West Indian hurricane of great violence but fortunately of rather brief duration, lasting only about eight hours. Many trees were uprooted or so injured as to require cutting down, and in a great many cases the lacerations of leaves and tender twigs enabled destructive fungi to obtain entrance. A portion of the garden was flooded by salt water from the bay, which badly injured or killed many plants.

In the nights of December 24 and 25, 1906, the temperature dropped several degrees below the freezing point, many of the tender plants being killed or severely injured. Following the freeze came the worst drought known in the southern part of Florida. The rainfall from December 1, 1906, to June 30, 1907, amounted to but 13.83 inches, while in the corresponding period a year previous it amounted to about 48 inches, the latter being, however, about 18 inches above normal. This drought made it necessary to use in watering the plants a great deal of time that might otherwise have been employed in scientific work. It also made it more difficult for the plants injured by the hurricane and freeze to recover their normal condition. In spite of the adverse conditions mentioned, however, some definite results have been obtained during the year, which are briefly outlined as follows:

NEMATODE DISEASES.—The nematode investigations were carried on both at Miami, Fla., and at Monetta, S. C. At Miami culture ex-

periments in pots of sterilized soil were conducted to determine to what degree, if any, the root-knot nematode of the more commonly cultivated plants of the Southern States has developed strains which are capable of attacking only certain plants. So far the results show that for the more common plants the root-knot nematode is not specialized. The number of species of plants known or reported to be more or less subject to attacks of this nematode has been increased to 359, of which 233 have been personally observed. Rotation experiments were conducted at Monetta, as well as experiments with the trap-crop method of reducing the number of nematodes. The former will be continued another year, although it is already evident that even one year devoted to nonsusceptible plants very greatly reduces the number of nematodes in the soil—even more, indeed, than resulted this year from the trap-crop method.

An extended trip was made to determine to what extent this pest is distributed, the following States and Territories being visited: Mississippi, Louisiana, Texas, New Mexico, Arizona, California, Utah, Colorado, Kansas, and Nebraska. It is rather generally distributed in the Gulf States, where the soil is sandy, and is also progressing northward and westward through Texas. It is not abundant as yet in New Mexico. In Arizona it is found in some localities, while in others it is just gaining entrance. In California it is widespread throughout the State, and in Colorado it is destructive to the sugar beet and cantaloupe in spots in the southeastern part of the State. It was quite definitely settled that its chief mode of gaining entrance into a new locality is through nursery stock, the peach, mulberry, and Old World grape being, perhaps, the principal plants responsible for its spread.

Diseases of tropical fruits.—In the study of the diseases of tropical and subtropical plants due to *Colletotrichum gloeosporioides* some interesting observations were made. It had already been shown by Prof. P. H. Rolfs that bloom-blight of the mango, avocado, and lime due to this fungus can be prevented by spraying the blossom clusters with Bordeaux mixture twice during the blossoming period. This observation was abundantly confirmed this year. The harmful effect of improper fertilizers was shown in a block of avocado trees near Miami, in which through the excessive use of phosphoric acid and a deficiency of potash the new growth remained soft and green and the small trees blossomed to an abnormal extent. This fungus entered the flower clusters and ran down through them into the twigs and through them into the unhardened branches and main trunks, in many cases killing the tree. Further inoculation experiments were continued with the fungus to determine, if possible, its identity with other similar fungi, but this year without very positive results.

Tomato diseases.—The most serious tomato disease in southern Florida is wilt, due to a species of Fusarium. The selection of seed from resistant plants grown in infested soil was continued the past spring. A fairly high percentage showed resistance to the disease, but did not show any increased resistance to attacks of nematodes. The quality of the fruit was inferior to that of last year, in spite of the fact that quality, as well as resistance to disease, was considered in making the selection. The quality of tomatoes in the surrounding country, however, was also inferior to that of last year.

VANILLA EXPERIMENTS.—A few additional vanilla species were received from Panama, Central America, and the Bahamas. From the effects of the freeze it is evident that even under lath shelter the ordinarily cultivated species of vanilla will not succeed in Florida. It is intended, however, to cross these species with the much hardier native Florida species, in the hope of obtaining strains combining the hardiness of the one sort with the high vanilla production of the other.

ROSELLE IMPROVEMENT.—Following the lines suggested by Prof. P. H. Rolfs three years ago, Mr. P. J. Wester has continued the selection of roselle (*Hibiscus sabdariffa*), with the aim of producing a strain with large calyces, the calyx being the part of the plant used for making jelly and sauces. Already he has succeeded in producing a variety whose calyces are more than twice as long and broad as those of the ordinary sort. The freeze destroyed nearly all the plants, leaving only enough seed for use at the garden this year. In another season, however, a limited quantity of seed will be available for distribution. An attempt is also being made to produce a short-season variety that may be grown in the more northern States, but as yet no definite results have been obtained in this direction.

IMPROVEMENT OF TROPICAL FRUITS.—The work on the improvement of various tropical fruits has been mainly carried on by Mr. Wester. There are thousands of seedling avocado and mango trees in the vicinity of Miami, and many of these have been tested and budwood of several promising sorts of the avocado has been obtained. Of the mangoes, most are inferior to the importations from India, but a few seedlings of the Manila mango from Cuba have been found to be of exceptional merit.

Success has been obtained in grafting and budding the cherimoyer (*Anona cherimolia*) upon the pond apple (*Anona glabra*), a stock suited to low, moist localities, and also upon the custard apple (*Anona reticulata*). The latter possesses a very vigorous root system, and is suited for growth on uplands. Of the cherimoyer trees at the garden it is expected that one or two may fruit next year. But for the freeze this should have occurred this year.

PLANT INTRODUCTION WORK.—In cooperation with the Office of Seed and Plant Introduction a great many imported plants have been grown at the garden. Among these is the Sundersha mango, fruited for the first time in America at this garden. The fruit is large, elongated, and fiberless, so that it can be eaten with a spoon. The few that ripened well were of a delicious spicy flavor, with enough acid to give a sprightly taste. Many of the fruits, however, show a tendency to split before becoming mature. Two more mango varieties bloomed this spring but failed to set fruit. A number of species of the pistache are making good growth at the garden, and it is hoped that this nut may succeed in Florida as in California.

The freeze played havoc with many of the introductions of the Office of Seed and Plant Introduction being tested at the garden. It was of value, however, in that it showed the too great tenderness of many plants. Among the plants thus found to be too tender for culti-

vation in southern Florida may be mentioned coffee, cacao, Kafir plum, tropical species of vanilla, the mangosteen, and many ornamental plants.

CHICO PLANT INTRODUCTION GARDEN.

During the year several hundred thousand plants which arrived in the form of seeds or scions were propagated and distributed. At the present time 59 of the 89 acres which compose the garden are devoted either to the testing of plants or to their propagation for distribution. Eight acres of these 59 have been set aside for the resistant grape varieties and 4 acres are being used in corn variety tests, while 33 acres are devoted to the testing of forage crops, 18 of which are irrigated. Five acres are devoted to the propagation of the Japanese matting rushes and 5 acres to the propagation of nursery stock, largely that secured by Mr. Meyer from China. Three acres not irrigated are devoted to the fig orchard.

The plants now growing in the garden represent a wide range of fruits, forage plants, and ornamentals. Among the most interesting may be mentioned the new Chinese Actinidia, an extremely ornamental vine bearing large plum-like fruits, said to have the flavor of the gooseberry. This has proved perfectly hardy in the garden, and a variety is growing there which may be hardy even in Virginia and North Carolina.

The timber bamboos of Japan imported in 1905 have shown an unusual growth, and though given very little irrigation they have obtained a height of 20 feet, this in less than three years after importation. A collection of carobs, representing several varieties, is being propagated there, and it is believed that this tree, particularly the fine fruiting varieties, will be a decided addition to the landscapes of southern California and at the same time will furnish valuable fodder, for which there is a ready market.

One of the new Chinese cherries ripened April 12 and is thought to be a very promising early variety for crossing purposes by California nurserymen. A very valuable collection of pistaches contains some of the best fruiting varieties, as well as the *Pistacia terebinthus*, *Pistacia mutica*, *Pistacia atlantica*, and the *Pistacia chinensis*, which will be used as stocks. Probably the largest collection of fig varieties in this country, including the Chiswick collection of 77 varieties, is to be found at this garden. Cuttings from this collection will be distributed as rapidly as possible to those interested in fig culture. A collection of loquats, olives, hybrid citrus fruits, and pomegranates is being maintained for propagation. Twenty-six varieties of the Japanese flowering cherry, an ornamental of great promise for California, are well established and flowered well this year, attracting a great deal of attention. A very interesting collection of apricots, peaches, plums, apples, and pears collected by Mr. Meyer in China is being held for propagation. Mr. Meyer's interesting Chinese grapes; a variety from Afghanistan; the Hyasco, a variety from China; and an interesting wild grape from Siberia are growing in the garden. A collection of 90 Chinese dates, or jujubes, 3 new varieties of Chinese persimmons, a number of the annuals, interesting to seedmen, from China, and a miscellaneous collection representing specimens remaining in the garden from previous distributions make up the remainder.

A successful shipment of matting roots from Japan was made during the year, and the plants are now growing at the Chico garden. The shipment consisted of 59 cases of the roots of species of Juncus, about 35,000 plants, and one carload of Cyperus roots, consisting of about 77,000 plants. As indicated in another part of this report, as soon as these plants have multiplied sufficiently, they will be distributed to experimenters in the Southern States.

The equipment at the Chico garden has been increased during the year by the construction of a substantial office building and laboratory where the requisite books, specimens, and other apparatus necessary for the carrying on of the work can be kept.

SOUTH TEXAS GARDEN, BROWNSVILLE, TEX.

As previously mentioned, there has been established at Brownsville, Tex., a garden for the purpose of investigating the relation between climate and crops in this important region. This work has just been inaugurated; hence there is nothing in the way of progress to report.

COTTON CULTURE FARMS.

During the past fiscal year the greater part of the Farmers' Cooperative Demonstration Work, of which Dr. S. A. Knapp is Special Agent in Charge, has been conducted in the weevil-infested portions of Texas and Louisiana. Some work was also done in the territory ahead of weevil infestation and in Arkansas. Prior to March 4, 1907, there were employed in the prosecution of the work in the territory mentioned seventeen special agents. An additional appropriation for the work became available on March 4, however, and the number of special agents was then increased to thirty-five, of whom twenty were assigned to Texas, nine to Louisiana, and six to Arkansas.

PLAN OF THE WORK.—The general plan of work has not differed materially from that of former years. Two kinds of farms were established, differing principally in the degree of supervision exercised by the special agents. Each agent was required to establish in his territory a number of special farms for cotton and corn, as publicly located as possible and under his immediate supervision. He was required to keep an accurate record of the work done, its cost, the yield, and the profit or loss accruing from the year's operations. Usually seed was furnished for these farms, which are known throughout their territory as "demonstration farms" and are intended to give publicity to the work, to insure the keeping of accurate data as to the cost of growing crops under improved cultural methods, and to show the increased yield and profit over the ordinary methods of cultivation followed in the community. They are also intended as object lessons for cooperators, and as a standard of farming to which they are expected to attain.

In addition to the demonstration farms, every farmer who agreed to cultivate some portion of his land under instruction and to make a report on the results was enrolled as a cooperator. Full instructions on the preparation of soil, planting, fertilizing, and cultivation were sent by mail from the central office at Lake Charles, La., and the field agents also visited their farms and advised them as far as

practicable. Cotton and corn, the basic crops of the section, are grown on these farms. Cowpeas are used as a renovating and feed crop and wheat and oats as cover crops. The agents have, however, incidentally been called upon to give instructions on the growing of various other crops, truck and fruit growing, animal husbandry, and farm management.

FARMS IN OPERATION.—At the close of the fiscal year there were in operation under the supervision of the field agents a total of 2,198 demonstration farms, of which 1,357 are located in Texas, 770 in Louisiana, and 71 in Arkansas. The comparatively small number in Arkansas is due to the fact that before the additional appropriation became available, on March 5, 1907, but two agents were employed in that State, and when additional agents were appointed it was deemed too late to establish more farms the present year. In addition to these farms there were also in the States mentioned more than 3,500 cooperators receiving instructions from and directly reporting to the central office.

EXTENSION OF THE WORK.—Work along similar lines to that carried on in the boll-weevil section was also conducted under the direction of Doctor Knapp in Alabama, Mississippi, and Virginia, the expense being defrayed by the General Educational Board of New York, but the agents being selected by and under the full control of the Department of Agriculture. In this work seven special agents were employed in Mississippi, five in Alabama, and two in Virginia. There are now in operation under their supervision 369 demonstration farms in Mississippi, 356 in Alabama, and 50 in Virginia, and about 3,000 cooperative farmers are enrolled from the territory mentioned.

In all, about 9,500 farmers are working under instructions and reporting directly to the central office or to the field agents. It is conservatively estimated that for each farmer reached directly in this way more than 25 others are reached indirectly through the demonstration and cooperative farms, by meetings, and through the press. Directly and indirectly, more than 250,000 farmers have been brought in touch with the demonstration work during the past fiscal year.

METHODS OF SECURING PUBLICITY.—Hundreds of farm meetings have been held during the past year by the special agent in charge and by the field agents. The total attendance at these meetings has aggregated many thousands, and great interest in better farming has been manifest. As a means of reaching thousands of farmers with whom the agents of this Bureau do not come in personal contact systematic use of the newspapers has been made during the past year. Every bulletin or letter of instruction sent to cooperators has also been furnished to about 1,000 county newspapers, and by most of them published in full. The hearty cooperation of the press has been of great value to the demonstration work.

INTENSIVE DEMONSTRATION WORK.—In portions of eastern Texas where, owing to limit of funds, it was possible to do little or no work the damage to the cotton crop in 1905–6 was severe. It being their first experience with the boll weevil, large numbers of farmers, especially tenants, abandoned their farms and left the country or found other employment. It seemed imperative that extra work should be

done in such sections to quickly restore confidence and business stability. Accordingly, when the additional appropriation became available it was arranged with several counties in Texas and with two parishes in Louisiana to assign to each of these localities the entire time of a special agent and to establish numerous demonstration farms in each county or parish, the business men of each locality to bear a part of the added expense of this intensive work. The counties and parishes entering into this agreement and the amounts contributed by them are: In Texas, Harrison County, $1,000; Smith County, $750; Anderson County, $750; in Louisiana, De Soto Parish, $750; Webster Parish, $950. About 200 demonstration farms are being conducted in each of the localities named, for which improved seed was furnished, and practically every farmer in each county or parish is in direct touch with the special agent and working under his direction. The following counties in Texas also contributed funds to secure partial intensive demonstration work: Camp County, $250; Cass County, $400, and Wood County, $400.

PLANS FOR FUTURE WORK.—For the ensuing year it is planned to continue work along the same lines as in the past. More will be done in Arkansas than heretofore, and in Louisiana the work will be extended to cover all that portion of the State west of the Mississippi River. Intensive work will be continued in the counties where already begun and will be extended as funds permit.

In cooperation with the general educational board the extension work will be increased in Alabama, Mississippi, and Virginia and will be inaugurated in Georgia, North Carolina, and South Carolina. As a new feature for the ensuing year it is planned to establish demonstration farms under the supervision of teachers of schools wherever such teachers can be found as have the requisite agricultural knowledge and experience and are willing to act as special agents outside of their school hours. It is also planned to establish, in cooperation with teachers, school demonstration farms wherever practicable.

REPORT OF THE FORESTER.

U. S. DEPARTMENT OF AGRICULTURE,
FOREST SERVICE,
Washington, D. C., December 3, 1907.

SIR: I have the honor to transmit herewith a report of the work of the Forest Service for the fiscal year ended June 30, 1907, together with an outline of the plans for the work of the Service for the current fiscal year.

Respectfully,

GIFFORD PINCHOT, *Forester.*

Hon. JAMES WILSON, *Secretary.*

SUMMARY.

EVENTS OF THE YEAR.

The salient facts of the year in connection with the work of the Forest Service were:

A radical change of organization to secure closer cooperation of allied lines of work with one another and better control by the Forester through a large reduction in the number of administrative heads reporting directly to him.

A decided extension and improvement in the system of inspection, through which the Office of the Forester is kept informed as to the efficiency of work in the field.

The creation of six inspection districts, with headquarters at Missoula, Denver, Albuquerque, Salt Lake City, San Francisco, and Portland.

Closer touch between office and field and a more unified service through a system by which supervisors are brought in turn from their Forests to fill, for periods of two or three months, the positions of the six district foresters at Washington.

A marked growth in the heartiness of support to the National Forest policy by the people of the West, who have now definitely made that policy their own.

An increase of the National Forests, held and managed by the National Government to serve the best interests of the public, both now and always, from 107,000,000 to 150,000,000 acres.

Better adjustment of the relations between the National Forests as sources of wealth and the citizens who benefit by them, together with a very much wider use of the Forests.

Notable success in the control of grazing on the Forests, to the satisfaction of those entitled to use of the range, the advantage of

the owners of stock, and the protection and improvement of the range itself.

A still further and very striking reduction of loss through forest fires from that of the preceding year, which had itself shown a most remarkable decrease from years that preceded.

The application of better methods for securing reproduction after lumbering, on the National Forests.

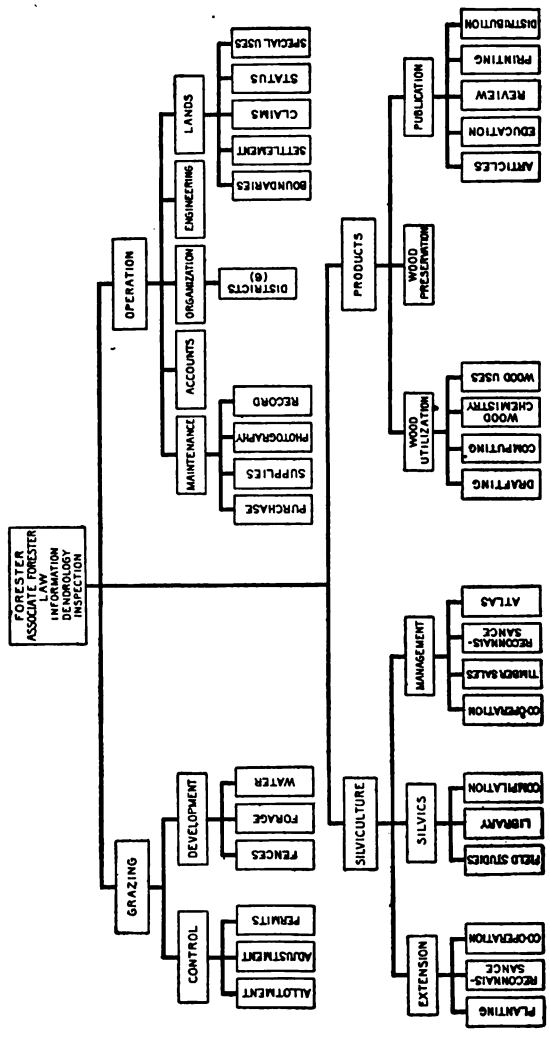

Organization of the Forest Service.

A far more active and intelligent realization on the part of the public throughout the entire country of the practical importance of forest preservation and the need of concerted action to avert the calamity of an exhausted timber supply.

A growing discernment of the far-reaching principle that the national welfare demands the conservation of all natural resources,

including the forests themselves, the water needed for agriculture, domestic supply, power, and navigation, which the forests largely control, and the soil which they hold in place.

SCHEME OF ORGANIZATION.

The chart on page 4 shows the present organization of the Service. This organization became effective April 17, 1907.

OFFICE OF THE FORESTER.

LAW.

On March 22 Mr. George W. Woodruff, Chief of the Office of Law, resigned to become Assistant Attorney-General of the United States, assigned to the Department of the Interior. His work for the Service was of very great value, not only in purely legal matters, but also in solving administrative problems and important questions of policy, especially in the sections of claims, special uses, and settlement, which were under his charge. These sections, with status, were in April transferred to the new Office of Lands, under which their activities for the year will be reported, and the law officer and his force were transferred to the Office of the Forester.

During the year the work was defined and systematized. The law officer now disposes of the following classes of business: Correspondence concerning forest legislation, State and Federal; litigation, including contested land claims; communications with the Department of Justice, including cases submitted to the Attorney-General for his opinion; submissions to the Comptroller of the Treasury for his decision. He scrutinizes regulations proposed to the Secretary of Agriculture for the Forest Service; proposed new proclamation forms; proposed new business forms; all contracts, bonds, and stipulations, including the sufficiency of their execution by the adverse party. He also advises the Forester, the fiscal agents, and branches and offices in legal questions incidental to the business of the Service, including questions of policy having a legal bearing.

In trespass, 73 cases were referred to the law officer, of which 48 were settled without court proceedings. Sixteen criminal and 8 civil suits were brought and 13 are pending in the hands of the United States attorneys. Two injunction suits to prevent grazing trespass and 2 to prevent unpermitted special use were decided, all in favor of the Government. Six civil and 18 criminal cases were closed, 9 of the latter by trial and conviction and 9 by discontinuance.

In the cases of United States *v.* Domingo (152 Fed. Rep., 566) and United States *v.* Daguirre (152 Fed. Rep., 568), the constitutionality of that part of the act of June 4, 1897, which makes it a criminal offense to violate the regulations of the Secretary of Agriculture made under that act, was again upheld. The criminal appeals act of March 2, 1907 (34 Stat., 1246), will enable the Government to appeal this question to the Supreme Court in case of an adverse decision. In the case of United States *v.* Shannon (151 Fed. Rep., 863) it was decided that the National Forests need not be fenced to restrain unauthorized grazing upon them, though State laws require this in the case of private lands.

Every effort was made to cooperate with the General Land Office of the Department of the Interior in securing settlement in civil cases and conviction in criminal cases of trespass upon lands included within National Forests since the trespass took place. A number of the civil cases were transferred to the Office of Law and $5,004.91 was recovered through settlement.

Very few cases of trespass upon State school sections, surveyed or unsurveyed, within National Forests were reported. Friction with the States which claim the right to sell timber from or to lease these sections has been avoided, because both the States and the Forest Service have refrained from making such sales and leases. Federal and State legislation was outlined for the relief of the States which claim school sections within National Forests.

The law officer cooperated with the Office of Lands in dealing with invalid land claims in National Forests. Within the Plumas National Forest claims amounting to 18,000 acres, alleged to be invalid under the mineral laws, are now being contested.

When the National Forests were transferred to the Department of Agriculture several protests were pending against the granting of special use applications, most of them rights of way for water and hydraulic electric plants, usually on the grounds of a speculative purpose and absence of a prior water right. Inquiry into these questions involved long and expensive hearings in the field, followed by successive appeals, and entailed voluminous records, wearisome delays, and heavy costs to the contestants. The Forest Service now requires the beginning and completion of construction within definite times and beneficial use for a fixed period each year, referring decision as to the priority of water rights to the courts. Under this policy, which was devised by Mr. Woodruff, most of the protested special use applications were promptly disposed of.

The increased National Forest business required the preparation of new forms for a number of instruments. Special contracts were prepared for the cooperative management of Utah State lands in National Forests and for miscellaneous permanent improvements in and protection of the National Forests, especially against fire, in the San Bernardino Forest.

Correspondence with citizens and members of State legislatures was carried on and advice upon forest legislation was asked and given in Alabama, Georgia, Idaho, Illinois, Louisiana, Maine, Massachusetts, Michigan, Minnesota, Nebraska, Nevada, Ohio, Oregon, Pennsylvania, South Dakota, Tennessee, Texas, Vermont, West Virginia, and Wisconsin. The most important State legislation of the year was a general forest law for Tennessee and fire laws for Pennsylvania and Oregon.

The agricultural appropriation act of March 4, 1907 (34 Stat., 1256), contains (pp. 1269–1271) the following new provisions affecting the Forest Service: Increase of the Forester's salary to $5,000 per annum; forest reserves to be known hereafter as National Forests; authorizing payment of expenses incurred for the transportation and care of fish and game supplied to stock the National Forests; authorizing the purchase of technical books and technical journals for officers stationed outside of Washington; Forest Reserve special fund abolished, with a compensating increase from $900,000 to $1,900,000 in the appropriation to protect, administer, improve, and

extend the National Forests; the creation of new Forests and additions to existing Forests in the States of Oregon, Washington, Idaho, Montana, or Colorado forbidden, except by special act of Congress, and (p. 1281) appropriation of $25,000 for investigation, survey, and report upon the proposed Appalachian and White Mountain National Forests.

Other acts of Congress included: An appropriation of $100,000 to continue surveys of National Forests (act of March 4, 1907, 34 Stat., 1336); certain townships within the Black Hills National Forest brought within the Forest homestead act of June 11, 1906 (act of February 8, 1907, 34 Stat., 883); lands within the San Juan National Forest granted to the city of Durango, Colo., for water-supply purposes (act of May 1, 1907, 34 Stat., 1053); certain lands within the Medicine Bow National Forest granted to Boulder, Colo., for water-supply purposes (act of March 2, 1907, 34 Stat., 1223); United States allowed to appeal directly to the Supreme Court in criminal cases decided against the Government on demurrer to indictment, arrest of judgment, or special plea in bar (act of March 4, 1907, 34 Stat., 1246).

WORK FOR THE ENSUING YEAR.

In the protection of the Forests from trespass through legal advice and action, the oversight of contracts and forms, the giving of advice to officers of the Service in all matters of law, and the response to requests for assistance or information concerning forest legislation, the law officer will continue to carry out the lines of work of the past year. Steps will be taken, in cooperation with the Department of Justice, to secure the fullest measure of protection for members of the Service in the performance of their duties and for permittees in the exercise of their privileges. National Forest officers will be instructed in their legal powers and duties through conferences at supervisors' and rangers' meetings, and on occasion a representative of the law officer will visit and advise members of the protective force needing aid or support in their official work.

INFORMATION.

This line of work, organized as a part of the Office of the Forester in May, is an outgrowth of work formerly carried in the Office of Publication and Education. Its purpose is to advise the Forester as to the general policy of the Service in matters of publication, to gather from the originating offices and furnish on demand information concerning the work of the Service and forestry in general, and to prepare for unofficial use matter of educational value which the Service may properly and effectively bring to the attention of the public through other channels than its regular publications.

One of the purposes for which the Forest Service exists is to educate the public as to the importance of conserving our forest resources and the best methods of handling woodlands and utilizing forest products. This can often be acomplished by being prepared to furnish the information in the form in which and at the time when the means of greatest publicity demand it. To depend solely on official publications, written without regard to the special requirements of this kind of work, would often miss the opportunity. For certain

kinds of information relating to forestry millions of readers can be reached through newspapers and magazines for thousands who could be reached at a much greater expense and much less effectively through official publication and distribution of the same matter. The Service therefore definitely seeks to give publicity through these channels to much of the useful information which it discovers.

The Government's work in promoting the best use of our forests, public and private, is recognizedly a matter of general and deep interest to the people of the country. One result of this interest is an increasing demand for information from representatives of the press concerning investigations under way, administrative work and policy, statistics of forest resources and products, and all kinds of facts related to the need and practice of forestry. This demand can not be ignored, and can not be satisfied without special provision to meet it. The result of making such provision is evident in lessened friction, less interruption of the work of administrative officers of the Service, a better response made to demands for information on matters concerning which the public has a right to expect publicity, and an important furthering of one of the ends for which the Service exists in the dissemination of knowledge of practical value concerning forest protection and use.

WORK FOR THE ENSUING YEAR.

Special attention will be given to popularizing technical information concerning forests, the requirements and life activities of forest trees, and the practice of forestry. Economical methods of utilizing wood and other forest products will also be presented. But above all the relation between the public welfare and the perpetuation of the forests, the loss of which would mean an impairment of the Nation's wealth, will be illumined to the fullest possible degree.

DENDROLOGY.

A very large part of the work of the Office of Dendrology is the giving of technical information through correspondence. This mainly concerns the identification of commercial woods for architects, builders, railroad companies, and others, and of seeds and other material from native and foreign trees. In all, 3,576 letters were prepared.

TURPENTINE INVESTIGATION.

It was definitely established by the turpentine investigation that shallow chipping with the ordinary hack yields more turpentine, makes it possible to work the trees an average of one and one-third years longer, and detracts less from their value for lumber than the old method. The discovery was made that by beginning chipping one month earlier than has been the custom the flow of resin during the following month is decidedly increased, and also that a cause of disturbance and loss in the process of distillation hitherto unexplained is the mixing of pond-pine resin with longleaf. This produces a boiling over in the stills which makes it necessary to throw away the entire charge. Progress was made toward a determination of the exact kind of turpentine yielded by the different species of southern

pines, knowledge of which will afford a basis for detecting adulteration of turpentine spirits, a matter hitherto impossible. The chemical studies involved in these investigations were made in cooperation with the University of North Carolina.

BASKET WILLOWS.

The experimental willow holts yielded 1,432 pounds of high-grade peeled rods and 15,000 choice cuttings for free distribution. The increase of interest in willow growing on the part of farmers and others is very marked.

SPECIAL DENDROLOGICAL STUDIES.

A report on the distribution and commercial importance of mahogany in Florida and adjacent coast islands was prepared, and the distinguishing characteristics of oak woods were studied.

Part I of the four tree books planned to cover the forest flora of the United States was brought nearly to completion. It describes 152 forest tree species of the Pacific slope, with accurate information as to their range, occurrence, soil and climatic requirements, tolerance, reproduction, and longevity, and is designed to be primarily a manual for National Forest officers. Part II, "Forest Trees of the Rocky Mountains," is in preparation. Progress was made in revising Bulletin 17, "Check List of Forest Trees of the United States," and in preparing a bulletin on the care of street and park trees.

FOREST HERBARIUM.

Approximately 1,500 specimens (foliage, fruits, and wood) were added to the collection, which numbers about 4,500 specimens of native and 1,000 of foreign trees.

Two new tree species were discovered, a brown-wooded New Mexican timber juniper (*Juniperus megalocarpa* Sudw.) and a California live oak (*Quercus pricei* Sudw.). Many sets of foliage, fruits, and seeds were presented to public schools.

FOREST DISTRIBUTION RECORDS.

Systematic compilation of authentic records of the range of trees was pushed, and the Service now has the largest and most complete record of North American tree ranges in existence. Substantial additions to earlier information were secured through field notes of Service officers, and notably by the contribution of distribution notes on California trees made by Dr. C. Hart Merriam, based on twenty years of field observation. The result has been to extend remarkably the known ranges of many forest trees, in some instances by hundreds of miles. These data will help greatly toward the preparation of a general forest map of the United States.

EXPOSITIONS.

Two hundred forest transparencies were loaned for use at the Pittsburg Sportsmen's Exhibit, 20 to the exhibit of the Newark, N. J., Tree Planting Society, and 80 to that of the New England Forest, Fish, and Game Association in Boston.

WORK FOR THE ENSUING YEAR.

Field studies of various western and southwestern tree species will be carried on, and preparation of publications already in hand and of a forest map of the United States will be pressed forward.

OPERATION.

ORGANIZATION.

A distinct advance was made in the practical management of the National Forests. Wider application was given to the policy of local control, business methods were simplified, and the personnel was strengthened to the fullest extent permitted by the funds available.

The wisdom of dividing the National Forests into administration and inspection districts was amply vindicated, and the number of districts was increased to six. The office work of the districts was superintended in rotation by 19 different members of the field force temporarily transferred to Washington to act as district foresters. The value of this plan was seen in closer working relations between the office and the field, and wider views of National Forest interests on the part of these field men than could be gained in the work of a single Forest.

The districts as now constituted are as follows:

District 1.

Montana.
Northern Idaho.
Northwestern Wyoming.

District 2.

South Dakota.
Southeastern Montana.
Eastern Wyoming.
Minnesota.
Nebraska.
Kansas.
Colorado.
Southeastern Utah.

District 3.

Southern Arizona.
New Mexico.
Oklahoma.

District 4.

Southern Idaho.
Western Wyoming.
Eastern Nevada.
Utah.
Northern Arizona.

District 5.

California.
Western Nevada.

District 6.

Washington.
Oregon.
Alaska.

The responsibility of forest supervisors was very materially increased. They were given full direction of all work on their Forests, and all members of the Service assigned to work there, except inspectors and administrative officers from Washington, were placed under their instructions.

A third edition of The Use Book was printed, with revised regulations to take effect July 1, 1907. The revision was made in the light of experience, and it is believed that a marked gain is made in clearness of statement and in the better business methods prescribed for Forest work. The most important changes in regulations were those which provide for increasing the responsibility of forest supervisors. The Use Book will be distributed only to Forest officers and to actual users of the Forests. Information suitable for wide distribution to

the general public is given in more compact and simple form in a separate publication entitled "The Use of the National Forests."

Five supervisors' meetings were held at convenient points in Oregon, California, Arizona, Colorado, and Utah, and were largely attended. These meetings had an excellent effect. They were of special benefit in giving opportunity for the discussion and settlement of problems arising in the regular day's work on the Forests and in bringing about a better understanding of the general policy of the Service in matters connected with National Forest administration.

National Forests, showing new Forests, additions, and eliminations, July 1, 1906, to June 30, 1907.

State.	Forest.	Area July 1, 1906.	Changes in area by proclamations, July 1, 1906, to June 30, 1907.	
			New Forests and additions.	Eliminations.
		Acres.	*Acres.*	*Acres.*
Arizona	Baboquivari		126,720	
	Black Mesa	2,080,240		
	Chiricahua	169,600	117,920	
	Dragoon		69,120	
	Grand Canyon	2,807,520	7,000	56,000
	Huachuca		314,125	
	Mount Graham	118,600	22,280	
	Pinal Mountains	45,760		
	Prescott	423,680		
	San Francisco Mountains	1,975,310		
	Santa Catalina	155,520		
	Santa Rita	387,300	103,258	
	Tonto	1,115,200		
	Tumacacori		203,550	
California	Diamond Mountain	626,724	48,647	25,533
	Inyo		221,324	
	Klamath	1,896,313		
	Lassen Peak	897,115		
	Modoc	288,218		
	Monterey	335,195		
	Pinnacles		14,108	
	Plumas	579,520	208,222	
	San Bernardino	737,120		
	San Gabriel	555,395		
	San Jacinto	668,160	1,083,279	
	San Luis Obispo	363,350		
	Santa Barbara	1,838,323	143,777	
	Shasta	1,377,126	146,644	
	Sierra	5,049,934		
	Stanislaus	627,780	669,020	
	Stony Creek		937,569	
	Tahoe	838,837	31,648	
	Trabuco Canyon	109,920		
	Trinity	1,243,042		
	Warner Mountains	306,518		
	Yuba[a]	524,287		
Colorado	Battlement Mesa	797,720		
	Cochetopah	1,133,330		
	Fruita	7,680		
	Gunnison	901,270		
	Holy Cross	990,720	70,560	
	La Sal	29,502		
	Las Animas		196,140	
	Leadville	1,219,947		
	Medicine Bow	1,155,909	190,246	
	Montezuma	576,719	1,035,427	
	Ouray		273,175	
	Park Range	757,116	376,890	320
	Pikes Peak	1,681,667		
	San Isabel	321,227		
	San Juan	1,437,406	766,512	
	Uncompahgre	478,111	141,317	
	Wet Mountains	239,621		
	White River	970,880		

[a] Yuba included in Tahoe Sept. 17, 1906.

National Forests, showing new Forests, additions, and eliminations, July 1, 1906, to June 30, 1907—Continued.

State.	Forest.	Area July 1, 1906.	Changes in area by proclamations, July 1, 1906, to June 30, 1907.	
			New Forests and additions.	Eliminations.
		Acres.	*Acres.*	*Acres.*
Idaho	Bear River	415,360		
	Bitter Root	3,860,960		
	Big Hole		304,140	
	Caribou		733,000	
	Cabinet		494,560	
	Cassia	326,160		
	Coeur d'Alene		2,331,280	
	Henrys Lake	798,720		
	Kootenai		165,242	
	Lemhi		1,344,800	
	Palouse		194,404	
	Payette	1,460,960		
	Port Neuf		99,508	
	Pocatello	49,920		
	Priest River	541,160	273,940	
	Raft River		293,044	
	Salmon River		1,879,680	
	Sawtooth	1,947,520	1,392,640	
	Weiser	1,059,520	81,600	14,691
	Yellowstone	177,960	128,880	3,840
Kansas	Garden City	97,280		
Montana	Big Belt	630,260	11,840	640
	Big Hole		1,612,960	
	Bitter Root	691,920		
	Cabinet		1,566,400	
	Crazy Mountains		234,760	
	Elkhorn	186,240		
	Ekalaka		33,808	
	Gallatin	888,660		
	Helena	782,160		
	Hell Gate	1,576,000	6,400	
	Highwood Mountains	45,080		
	Kootenai		887,360	
	Lewis and Clark	4,670,720	870,460	
	Little Belt	583,560	478,560	8,960
	Lolo		1,211,680	
	Long Pine		111,445	
	Little Rockies		31,000	
	Madison	958,800		
	Missoula		194,430	
	Otter		590,720	
	Pryor Mountains		204,320	125,587
	Snowy Mountains		126,080	
	Yellowstone	1,229,680	137,280	14,720
Nebraska	Dismal River	85,123		
	Niobrara	123,779		
	North Platte	347,170		
Nevada	Charleston		149,165	
	Independence		135,019	
	Monitor		572,640	
	Ruby Mountains	423,660		
	Tahoe	59,115		
	Toiyabe		625,040	
	Toquima		368,000	
New Mexico	Big Burros		156,780	
	Gallinas		78,480	
	Gila	2,823,900		
	Guadalupe		283,065	
	Jemez	1,237,205	223,040	
	Lincoln	545,256	129,472	47,293
	Las Animas		480	
	Magdalena		154,882	1,100
	Manzano		459,726	
	Mount Taylor		110,525	
	Pecos River	430,880		
	Peloncillo		178,977	
	Portales[b]	172,680		172,680
	Sacramento		881,341	
	San Mateo		424,668	
	Taos		233,200	
Oklahoma	Wichita	60,800		

[b] Portales National Forest abolished Mar. 16, 1907.

***National Forests, showing new Forests, additions, and eliminations, July 1, 1906, to June 30, 1907*—Continued.**

State.	Forest.	Area July 1, 1906.	Changes in area by proclamations, July 1, 1906, to June 30, 1907.	
			New Forests and additions.	Eliminations.
		Acres.	*Acres.*	*Acres.*
Oregon	Ashland	21,120	151,680	
	Chesnimnus [a]	220,320		
	Blue Mountains	2,675,620	874,080	
	Bull Run	142,080		
	Cascade	4,424,440	1,462,400	
	Coquille		148,317	
	Fremont		1,235,720	
	Goose Lake		630,000	
	Heppner		292,176	
	Imnaha		782,720	
	Maury Mountains [b]	54,220		
	Siskiyou		1,132,582	
	Tillamook		175,518	
	Umpqua		798,400	
	Wallowa [a]	747,200		
	Wenaha	413,250	81,692	
South Dakota	Black Hills	1,163,160		
	Cave Hills	23,360		
	Short Pine	19,040		
	Slim Buttes	58,160		
Utah	Aquarius	639,000		
	Bear River	267,920		
	Beaver	261,593	25,106	
	Dixie	465,920		
	Fillmore	399,600		
	Fish Lake	288,800	74,537	
	Glenwood		173,896	
	Grantsville	68,960		
	La Sal	128,960		
	Manti	777,920	8,160	
	Monticello		214,270	
	Payson	167,280		
	Raft River		117,203	
	Salt Lake	95,440		
	Sevier	710,920		
	Uinta	2,148,510	39,040	
	Vernon	68,800		
	Wasatch		85,440	
Washington	Colville		869,520	
	Olympic	1,466,880	127,680	
	Priest River	103,960	302,560	
	Rainier	1,943,520	701,600	79,360
	Washington	3,952,840	2,358,380	480
	Wenaha	318,400		
Wyoming	Big Horn	1,151,680		
	Bear Lodge		136,784	
	Black Hills	46,440		
	Caribou		7,740	
	Crow Creek [c]		56,320	
	Medicine Bow	418,759	164,605	
	Sierra Madre		370,911	
	Uinta	4,596		
	Yellowstone	6,580,920	87,800	6,080
Alaska	Afognak	403,640		
	Alexander Archipelago	4,506,240		
Porto Rico	Luquillo	65,950		
Total		106,994,018	44,396,531	557,881

[a] Chesnimnus and Wallowa included in Imnaha Mar. ., 1907.
[b] Maury Mountains included in Blue Mountains Mar. 2, 1907.
[c] Included in list of National Forests by decision of Acting Secretary of Interior August 9, 1907.

Grand total, June 30, 1907, 159 National Forests, 150,832,665 acres.

At the end of the fiscal year all the National Forests in the United States and Alaska were under organized administration. They comprise 183 administrative units, under the supervision of 116 officers in charge. Fifty-six new Forests were put under administration during the year.

The local administrative and protective force on the National Forests on June 30, 1907, was 96 supervisors, 11 deputy supervisors, 639 rangers, and 464 guards. Each field officer engaged in patrol covered, on the average, 132,236 acres.

Aid in technical matters was given to supervisors by 25 forest assistants and 10 planting assistants.

The transfer to the local officers of administrative details formerly handled in Washington, together with the routine work arising from the larger use of Forest resources, made it necessary to increase the number of clerks in the offices of supervisors from 6 to 29.

Protective measures against forest fires on the National Forests were highly effective. The area burned over during the calendar year 1906 was restricted to 115,416 acres—less than 7.7 acres in 10,000, as against 26 for the preceding year. The number of fires reported was 1,133, and the average burned area less than 102 acres. The estimated value of the timber destroyed was $76,183, as against $101,282 for the preceding year. The cost of fighting fires, exclusive of the salaries of Forest officers, was $8,768. This small damage from fires, many of which were started by lightning and other unavoidable causes, in immense stretches of mountainous country, is evidence that the measures adopted for detecting and extinguishing fires on the National Forests are efficient. It is certain that loss by fire can be virtually eliminated if appropriations for the Forests provide adequate means of communication and sufficient protective force.

Provision was made for establishing a buffalo pasture on the Wichita National Forest in Oklahoma. The New York Zoological Society inaugurated the project on March 25, 1907, by offering to send 18 American bison of pure breed from the New York Zoological Park to the Forest in order to provide for the perpetuation of the species, if appropriate provisions were made for their protection and care. An appropriation by Congress of $15,000 provided funds for the necessary fence and buildings. Substantial progress was made with the work of fencing an area of about 8,000 acres and erecting suitable buildings. This work will be completed early in the ensuing fiscal year, and the herd placed under the care of a Forest officer experienced in handling buffalo.

WORK FOR THE ENSUING YEAR.

The National Forests will be redistricted with a view to their more economical administration and to making the headquarters more accessible to users. This redistricting will involve the creation of many new administrative units. The Forests will be divided by watersheds and natural boundaries rather than by legal subdivisions.

Steps will be taken to afford rangers opportunity to receive instruction along lines which will add to their efficiency. This will be done either by short winter courses in local institutions or by lectures at ranger meetings.

Joint meetings of the supervisors and rangers of groups of Forests will be held throughout the West. Hitherto rangers' meetings have been held by each supervisor for the men on his own Forest merely.

The responsibility of the field officers will be largely increased by moving into the field more of the work now handled in Washington, so that questions of local administration may be settled at closer range.

ENGINEERING.

In the appropriation act of March 4, 1907, a fund of $500,000 was provided for permanent improvement work on the National Forests, $125,000 of which was made available for use during the then current fiscal year. Urgent need existed for the construction of telephone lines to expedite the administrative work of the Forests, and especially to make it possible for supervisors to get prompt notice in case of fire or trespass; trails, roads, and bridges to develop the resources of the Forests by opening up regions now inaccessible; cabins to shelter members of the protective force and to safeguard Government property; pasture fences to protect the stock of Forest officers; and drift fences to prevent confusion in the handling of grazing herds.

Estimates of needed improvements were received from supervisors aggregating $400,000, and expenditures amounting to $170,000 for cabins, fences, fire lines, 700 miles of telephone lines, 900 miles of roads and trails, and other improvements were authorized before the end of the fiscal year. Active work was begun in carrying out projects chargeable to the fund of $125,000 made immediately available.

Five commercial power plants on two National Forests were inspected and found to be in accordance with permit stipulations.

WORK FOR THE ENSUING YEAR.

The work planned includes the construction of over 3,500 miles of telephone line, 3,000 miles of trail, 200 miles of road, 250 bridges, 500 miles of drift and boundary fences, and 500 cabins and barns. The large number of Forests upon which the work will be carried on simultaneously will make necessary a large increase in the force of supervising engineers.

A number of the roads will be built in cooperation with States and counties. In Idaho, for example, $4,000 will be expended in cooperation with the State to build a State road from Boise to Atlanta, and $3,000 to open a wagon road from Harpster to Elk City and to reconstruct the old and well-known Salmon River trail. About $4,000 will be spent in reopening and repairing the Lolo military trail, which many years ago made accessible a territory rich in possibilities, and which will shorten the route between the eastern and western portions of the State by many miles. Road work in cooperation with counties will be undertaken in Colorado, Oregon, and Idaho, and probably in other States.

Fire lines to cost $10,000 will be built on the San Bernardino National Forest in cooperation with the State of California.

ACCOUNTS.

An annual statement was prepared for the accounting officers of the Treasury showing receipts from sales of products on the different National Forests. This statement is used by the Secretary of the Treasury in determining the 10 per cent required by law to be deducted and turned over to the States and Territories in which the Forests are situated for the benefit of public schools and public roads.

The amounts to be paid to the States and Territories, as shown by the statement, are as follows: Alaska, $367.15; Arizona, $17,307.92; California, $16,064.29; Colorado, $15,791.67; Idaho, $19,591.66; Kansas, $119.39; Montana, $20,655.42; Nebraska, $1,017.61; Nevada, $2,133.98; New Mexico, $9,614.06; Oklahoma, $125.50; Oregon, $13,980.89; South Dakota, $2,752.23; Utah, $13,557.38; Washington, $3,731.55; Wyoming, $16,221.49; total, $153,032.19.

The number of accounts rendered for settlement was greatly lessened by the adoption of a new form of certificate of service and a corresponding pay roll for each National Forest, instead of the individual salary voucher hitherto used.

The discontinuance of the duplication of vouchers has materially reduced the amount of work involved in the preparation of accounts, both in the field and in Washington. This method of settlement has been in use one year, long enough to show its manifold advantages.

In addition to the regular work of the Office an annual statement showing under twenty special headings the disbursements of all the appropriation of the Forest Service was prepared for the report of the Committee on Expenditures in the Department of Agriculture, House of Representatives.

Changes in personnel, including appointments, promotions, resignations, etc., numbered 4,649, and the temporary employment of 1,826 persons was reported for the approval of the Secretary of Agriculture.

The liability system in use by the Forest Service was so extended that the expenditure of practically every cent is anticipated and provided for.

The system of cost keeping was made more comprehensive, and now includes the cost of individual projects on the National Forests. By it standards of cost were made available for use in the planning of new work.

MAINTENANCE.

SUPPLIES.

Improved methods of handling requisitions and keeping account of stock resulted in increased promptness in getting supplies into the field. Delays of shipments occurred during the winter months because of snow blockades in the Northwest and the consequent congestion of traffic, but the inconvenience to the Forest Service was comparatively slight. By the system of semiannual requisitions, Forest officers were furnished with all needed supplies which could be anticipated, during the time of year when the movement of traffic is free.

The number of kinds and sizes of instruments and articles of stationery carried in stock was reduced, and lists of standard materials were issued for the guidance of members of the Service in making requisitions.

PHOTOGRAPHY.

The extension of administrative and investigative work on existing National Forests and on new Forests created during the year involved a more general use of maps and blueprints. The increased use of photographs in connection with applications made for lands

for agricultural settlement and other special uses also added to the volume of work for the laboratory. To meet these demands the facilities were increased and one additional photographer was employed.

Equipment for mounting maps was installed, enabling the Service to furnish members engaged in field work maps mounted on cloth in convenient and durable form.

RECORD.

The concentration of stenographic and typewriting work and other routine clerical labor was continued with good results. The average number of stenographers and typewriters available for copying and typewriting and for temporary detail to offices was 32. In addition, 16 clerks, assigned to ordinary routine work, were available for detail to offices in emergencies. This elastic system of supplying temporary clerical help to offices resulted in a high degree of efficiency, with a marked gain in economy of time and cost.

During the year 158,191 official communications were received, and 299,610 were sent out.

The depreciation of field equipment and instruments in the hands of Forest officers was less than 5 per cent of the total value of all such property in use.

WORK FOR THE ENSUING YEAR.

Additions will be made to the facilities of the laboratory, which will enable the photographer to furnish maps and blueprints more promptly than ever before.

Supply depots will be established at convenient shipping points in the West. The proximity of these depots to the National Forests will facilitate the furnishing of supplies to Forest officers.

The plan of concentrating the routine clerical force will be extended.

LANDS.

BOUNDARIES.

The examination of lands for new National Forests and for additions to and eliminations from existing Forests led to the changes tabulated on pages 11, 12, and 13. A total of 16,324,880 acres was still under temporary withdrawal for exemption, while 11,331,916 acres were released from withdrawal during the year.

Sites for 1,552 rangers' headquarters on 96 National Forests were selected and withdrawn from entry during the year. The headquarters were needed to facilitate the local administration of the Forests and to afford centers for protective work against fires and depredations.

AGRICULTURAL SETTLEMENT.

The act of June 11, 1906, which opened to entry all land within National Forests chiefly valuable for agriculture and not needed for administrative use, brought 3,871 applications from actual and prospective settlers. Examination of the lands applied for was

promptly begun in the summer and fall of 1906, but before it could proceed far winter interrupted the work. Before spring came a large number of applications had accumulated. Under the supervision of the chief inspectors in the different districts the field work was pushed as rapidly as possible by experienced men. These examiners, almost without exception, were western men, thoroughly familiar with local conditions. The examiners were accompanied by the applicants whenever this was possible. Detailed surveys were made of areas for listing which were not covered by the public-land surveys. A full report was made upon each tract; it considered markets, transportation facilities, topography, soil, cover, and economic possibilities.

Applicants with prior rights are permitted to occupy lands chiefly valuable for agriculture and not needed for administrative use, pending the formal listing of the lands. Settlers already occupying lands in good faith are not required to apply for permission to continue their occupancy and use. The only restrictions are that the land must be chiefly valuable for agriculture and not needed for administrative use, and that the interests of any previous applicant for the same land must not be injuriously affected.

CLAIMS.

Although lands included within National Forests are withdrawn from all forms or entry or filing, except under the mining laws and the agricultural settlement act of June 11, 1906, many claims are valid because initiated prior to the creation of the National Forest. All alleged claims must be examined and reported upon in order that the Commissioner of the General Land Office may be informed if there appears to be reason why patent should not issue.

Three geologists detailed by the Geological Survey assisted the forest supervisors in examining mining claims.

Reports on 2,473 claims inside National Forest boundaries were received from examiners. Of this number 1,093 mining, 705 homestead, 50 desert land, 42 timber and stone, and 29 miscellaneous claims were transmitted to the General Land Office for final action; 200 mining, 100 homestead, 10 desert land, and 29 timber and stone claims were held for further report, and 215 required no action.

The General Land Office ordered 91 hearings on recommendations of the Forest Service that claims be rejected.

SPECIAL USES.

The business of special uses was approximately double that of the preceding year. Applications were received for 1,763 permits, and 100 applications for rights of way amounting to easements were referred to the Forest Service by the Department of the Interior for recommendation. Of the permits applied for, 1,668 were issued, 50 were refused, and 45 were received too late to be acted upon before the close of the year.

STATUS.

There were obtained from the General Land Office records relating to tracts of land concerning which information was needed, and data concerning alienations and the status of titles needed to determine

whether the land was National Forest land or held in private ownership were furnished to forest supervisors and to the offices in the Service.

WORK FOR THE ENSUING YEAR.

The need of examining lands for the creation of new National Forests and for additions to and eliminations from existing Forests will be materially less than last year, and the number of examiners will be correspondingly decreased. Selection and withdrawal from entry of administrative sites for rangers' headquarters will be continued. In regions where the National Forests are confined largely to the higher elevations the sites selected will usually be on ground low enough to permit of residence throughout the year.

A large force of experienced men will continue the work of examining lands applied for under the agricultural settlement act of June 11, 1906, and the work will be vigorously carried to completion.

Under the revised regulations effective July 1, 1907, supervisors will be authorized to grant permits for the use of the National Forests, except upon applications for permits for the installation of commercial power plants and other uses of large importance, which will be reserved for the action of the Forester.

Examinations of mining claims on the National Forests will be made by an increased number of geologists from the U. S. Geological Survey. The work of examining nonmineral claims will be assigned to a trained force of Forest officers familiar with local conditions.

The work of examining the records of the General Land Office and obtaining data as to land titles within the National Forests will be carried on by an increased clerical force, to meet the growing demands of the Service for information of this character.

SILVICULTURE.

FOREST EXTENSION.

A distinct advance in efficiency was made in the work of this office. Nursery and planting operations in the National Forests present many difficult problems which the experience gained, both of success and failure, now make it possible to attack more vigorously and extensively. It is clear that some of the methods which at first seemed promising should be discarded, that the natural difficulties of establishing new Forests in the more arid parts of the Southwest must be overcome by measures of special care, and that in such regions it is false economy to make the first cost too small. Thus a firm foundation is being laid for future work.

Forest planting by private persons under advice from the Forest Service increased remarkably during the year.

PLANTING.

Stock for National Forest planting is now being grown at 8 stations, of which 2, the Fort Stanton and Las Gallinas, were established during the year. The following statement shows the size and

The Pikes Peak station has included nurseries at Clyde, Rosemont, and Bear Creek. The Clyde site has proved too small and too high for extensive nursery work, and will be abandoned. The suitability of the Bear Creek nursery site is also uncertain, since the seedlings of Engelmann spruce, blue spruce, and lodgepole pine were all winter-killed. A small new nursery at the Mount Herman ranger station has proved to have a far more favorable site than either the Clyde or Bear Creek nurseries, and it will therefore be developed into a planting station, with the idea of finally concentrating at this point all nursery work on the Pikes Peak National Forest.

Yellow pine, Douglas fir, and Scotch pine 2-year-old seedlings from Halsey were experimentally planted on six widely differing sites in the Pikes Peak Forest, at a cost of $5.44 per 1,000.

The 1905 field planting suffered seriously from drought. None of the yellow pine and only 5 per cent of the Douglas fir is alive. Of the 1906 field planting about 56 per cent of the trees were alive on June 1. The loss was due to drought and trampling of cattle.

At the Halsey station measures were taken to grow hardier and stronger plant material. Trees planted in the sandhills are exposed to very adverse conditions. The first step was to remove the lath roofing from over all one and two year old yellow pine seedlings. To secure trees hardened to wind and sun, and possessing more fibrous roots, all seedlings will in the future be transplanted to unshaded beds when one year old. With this new method of treatment some of the 4 acres now under lath will be converted to open transplant beds.

Slower but more careful methods of planting raised the cost from $1.68 to $3.95 per 1,000. The weather conditions were extremely unfavorable. On June 1, 55 per cent of the jack pine and 82 per cent of the Scotch pine planted during April and May were alive. Of the trees planted in 1906, 47 per cent are living. A test planting of 40,000 Scotch pine purchased from nurserymen and set out carefully is in good condition and shows considerable growth this season.

There were shipped from Halsey for planting elsewhere 94,000 trees, chiefly to the North Platte, Niobrara, Garden City, and Pikes Peak Forests.

Important experiments under way include the use of commercial fertilizer on the seed beds to induce more vigorous growth, shearing the needles of trees before planting in the field, and impregnating the seed beds with formalin solution to prevent "damping off."

At the Fort Bayard station the cost of transplanting was $1.63 per 1,000 or $0.79 per 1,000 more than last year. The increase is due to the use of larger seedlings and wider spacing to permit of irrigation for small ditches between the rows. The first field planting with stock grown at this station was during April. Jack pine and Douglas fir 2-year-old seedlings, from Halsey, Nebr., were also planted experimentally on selected sites. The average cost of planting was $5.75 per 1,000. One month after planting 82 per cent of the trees were in good condition. A considerable loss will probably result, however, from the dry weather of June and July. Of 450 transplants planted in December, 96 per cent were alive and in a healthy condition in May and had grown from 1 to 2½ inches.

estimated capacity of the seed beds, the amount of young stock on hand, and the amount furnished for field planting:

Forest planting stations: Size and estimated capacity of seed beds, young stock on hand, and young stock furnished for field planting.

Planting station.	Forest.	Seed bed.	Estimated seedling capacity.	Number of 1-year transplants.	Number of 2-year transplants.	Number of trees furnished for field planting.
		Acres.				
Pasadena	San Gabriel	0.20	300,000	150,000	230,000	108,900
San Marcos	Santa Barbara	.10	200,000	127,000	18,500	59,000
Pikes Peak	Pikes Peak	.60	400,000	7,800		
Halsey	Dismal River	4.00	4,000,000	250,000		241,500
Fort Bayard	Gila (S)	.50	400,000	89,800	23,000	40,500
Wasatch	Salt Lake	.70	800,000	119,000		
Fort Stanton	Lincoln	.30	400,000			
Las Gallinas	Pecos River	.30	400,000			
Total		6.70	6,900,000	743,600	271,500	444,900

The following field planting was done on National Forests:

Tree planting on National Forests.

Forests.	Number of trees planted.	Forests.	Number of trees planted.
San Gabriel	43,000	North Platte	19,000
San Bernardino	42,000	Niobrara	19,000
Santa Barbara	63,100	Garden City	24,000
San Luis Obispo	5,100	Gila	30,500
Monterey	4,700		
Pikes Peak	20,450	Total, 11 Forests	418,850
Dismal River	148,000		

The stock planted in the field in earlier years suffered severe losses from special causes, of which the principal were unusual drought and attacks of animals. On the San Gabriel Forest rabbits and wood rats did great damage. All efforts to protect against or exterminate these pests have hitherto proved futile. Rabbits are less common on open land and at higher altitudes, where in consequence most future planting will be done. Of the trees planted in 1905 the small percentage which were not destroyed by rabbits or other pests are in good condition, and from 24 to 36 inches high. More than 90 per cent of the trees planted in 1906 and nearly 50 per cent of those planted in 1907 were destroyed, while in the brush 95 per cent were seriously injured.

At the San Marcos station the weather conditions for nursery and planting work were especially favorable. Transplanting cost $1.78 per thousand. The seed beds were resown mainly with Jeffrey and Coulter pine.

On the Santa Barbara Forest planting near the nursery cost $10.65 per 1,000, but from a temporary camp $16.92 per 1,000. On June 1 the trees were in good condition and from 90 to 97 per cent were alive. Damage from rabbits and field rats is very slight in the Santa Barbara Forest, hence the only danger of loss is from drought. Dry weather through July, August, and September of 1906 caused a loss of 66 per cent in the planting of that year, but the live trees are in excellent condition.

The Pikes Peak station has included nurseries at Clyde, Rosemont, and Bear Creek. The Clyde site has proved too small and too high for extensive nursery work, and will be abandoned. The suitability of the Bear Creek nursery site is also uncertain, since the seedlings of Engelmann spruce, blue spruce, and lodgepole pine were all winter-killed. A small new nursery at the Mount Herman ranger station has proved to have a far more favorable site than either the Clyde or Bear Creek nurseries, and it will therefore be developed into a planting station, with the idea of finally concentrating at this point all nursery work on the Pikes Peak National Forest.

Yellow pine, Douglas fir, and Scotch pine 2-year-old seedlings from Halsey were experimentally planted on six widely differing sites in the Pikes Peak Forest, at a cost of $5.44 per 1,000.

The 1905 field planting suffered seriously from drought. None of the yellow pine and only 5 per cent of the Douglas fir is alive. Of the 1906 field planting about 56 per cent of the trees were alive on June 1. The loss was due to drought and trampling of cattle.

At the Halsey station measures were taken to grow hardier and stronger plant material. Trees planted in the sandhills are exposed to very adverse conditions. The first step was to remove the lath roofing from over all one and two year old yellow pine seedlings. To secure trees hardened to wind and sun, and possessing more fibrous roots, all seedlings will in the future be transplanted to unshaded beds when one year old. With this new method of treatment some of the 4 acres now under lath will be converted to open transplant beds.

Slower but more careful methods of planting raised the cost from $1.68 to $3.95 per 1,000. The weather conditions were extremely unfavorable. On June 1, 55 per cent of the jack pine and 82 per cent of the Scotch pine planted during April and May were alive. Of the trees planted in 1906, 47 per cent are living. A test planting of 40,000 Scotch pine purchased from nurserymen and set out carefully is in good condition and shows considerable growth this season.

There were shipped from Halsey for planting elsewhere 94,000 trees, chiefly to the North Platte, Niobrara, Garden City, and Pikes Peak Forests.

Important experiments under way include the use of commercial fertilizer on the seed beds to induce more vigorous growth, shearing the needles of trees before planting in the field, and impregnating the seed beds with formalin solution to prevent "damping off."

At the Fort Bayard station the cost of transplanting was $1.63 per 1,000 or $0.79 per 1,000 more than last year. The increase is due to the use of larger seedlings and wider spacing to permit of irrigation for small ditches between the rows. The first field planting with stock grown at this station was during April. Jack pine and Douglas fir 2-year-old seedlings, from Halsey, Nebr., were also planted experim[illegible] sites. The average cost of planting was $5.75 [illegible] h after planting 82 per cent of the trees were [illegible] c iderable loss will probably result, howe[illegible] of June and July. Of 450 transpla[illegible] cent were alive and in a thrif[illegible] from 1 to 2½ inches.

A new planting station known as the Fort Stanton station was established early in May on land near the Fort Stanton military post. A lath house 80 by 160 feet was constructed.

The Las Gallinas station was established in the Las Gallinas Canyon, 17 miles northwest of Las Vegas, N. Mex. A lath house 80 by 160 feet was built, a water system installed, and seed sown. The station is well located for distributing stock to other Forests.

The Wasatch station is proving extremely well suited for nursery purposes. All seedlings wintered remarkably well. The transplant ground will be enlarged before the next planting season.

At 52 ranger headquarters small nurseries were established with an average size of about 400 square feet. Two larger nurseries were established, one on the Mount Graham Forest, with an area of 14 acres, and one with an area of 12 acres on the Pocatello. The latter will be enlarged into a planting station during the summer.

On the Garden City Forest it was planned to plant 160,000 trees this season, but unfavorable weather forced abandonment of part of the work. Of the 91,000 trees planted in the spring of 1906, most were destroyed by drought, rabbits, and a severe prairie fire. The recurrence of such a disastrous fire can be prevented by a better system of fire lines.

Experimental plantings were made by rangers on the Monterey, San Luis Obispo, Chiricahua, Santa Rita, Tonto, Mount Graham, Pinal Mountains, Lincoln, Pecos, Grand Canyon (S), Yellowstone (Shoshone Division), Pocatello, and Wichita Forests. This work both tests the value of different kinds of trees for various regions and situations and trains the field force of the Service in planting.

On the Black Hills Forest an exceedingly interesting attempt to secure forest renewal through broadcast sowing of seed is being tested. The sowings made in 1905 and 1906 show, on the whole, fairly satisfactory results. In 1907 a new line of experiments was begun by selecting twenty different situations, ranging from plowed land to bare hill tops and slopes, and sowing them with varying quantities of seed. If a way can be found of sowing broadcast successfully in this region, a discovery of great importance to forestry in the Northwestern States will have been made.

RECONNAISSANCE.

Investigations were made as to the need for planting both in the National Forests and elsewhere. City and irrigation watershed studies were carried on in more than 30 Forests. Immediate planting can and should be undertaken on the Uinta, Pocatello, Lincoln, and Pecos Forests. The Pocatello watershed in the Pocatello Forest, Big Cottonwood in the Salt Lake Forest, Santa Ynez in the Santa Barbara Forest, Santa Fe in the Pecos Forest, and the watersheds of the cities of Pueblo and Colorado Springs in Pikes Peak Forest, all show denuded slopes on which rise streams that feed city water supplies. Large denuded areas in the Lincoln Forest furnish water both for the Hondo Reclamation Project and for the town of Roswell, N. Mex. Outside of the National Forests, information was gathered on tree planting in regions where assistance had been asked and the necessary data for advice were lacking, notably on irrigated lands in the North Platte and the South Platte valleys and on the Truckee-

Carson Reclamation Project. A study of tree planting in California was completed, and one covering Ohio and Indiana was begun and nearly finished.

COOPERATION.

The increasing volume of data from completed studies is leading more and more to the giving of assistance to private owners through correspondence and publications instead of by planting plans, which entail study on the ground. There were made, during the year, 23 planting plans in 15 States, covering 19,600 acres, 10,000 acres of which were covered by a single plan for the United States Reclamation Service, for lands in the North Platte Project. Another important plan was for planting eucalypts on 4,000 acres in California. In Pennsylvania plans were made for the Lehigh Coal and Navigation Company and the Monroe Water-Supply Company.

Advisory letters written to persons seeking assistance through correspondence numbered during the single month of May 288. Letters were received from every State and Territory in the United States, with California, New York, Illinois, Pennsylvania, Indiana, and Massachusetts in the lead, and from 10 foreign countries. The information furnished was specific, and one letter often brought extensive tree planting throughout a locality.

Valuable experiments in nursery and planting work are being conducted in cooperation with nine universities and State agricultural experiment stations in the East and the Middle West, at slight expense, which is equally divided between the Forest Service and the institutions. These experiments are to learn what species are best adapted to different regions, to improve methods of nursery planting, cultivation and thinning, and to test different spacings and mixtures. Among other matters which it is important to investigate through this means are the questions of species useful for protective and commercial planting on irrigated lands and of forest planting in connection with dry-land agriculture.

Experiments to learn how to combat the damping-off fungi, which so seriously affect forest nurseries, were begun in cooperation with the Bureau of Plant Industry at the Halsey planting station and with the New York forest, fish, and game commission at its nursery at Saranac, N. Y.

Publication of a series of regional circulars to set forth clearly and concisely the best advice that the Forest Service can give forest planters in each region has been begun.

WORK FOR THE ENSUING YEAR.

Nursery practice at the present stations will be closely studied, better stock grown, and the seed-bed area brought to a higher state of production. Greater care will also be given to choosing planting sites and perfecting field planting.

Plans are under way to transfer the Pasadena station to Lyttle Creek, the San Marcos to the Santa Ynez Valley, and to relocate the nurseries of the Pikes Peak station. These changes will secure better and more accessible sites without appreciable loss of equipment or permanent improvements.

Experimental sowing and planting will be carried out on a large number of Forests. Additional planting stations will be called for

if the scope of planting upon the National Forests is to be broadened to meet the opportunity opened by this work, but it is of most immediate importance to perfect methods and solve the difficult problems involved rather than to extend the work prematurely.

Particular attention will be given to study of the field for planting in the National Forests. Forest planting on irrigated lands, especially in Idaho, the Dakotas, Montana, and Wyoming, will also be studied further, in the field. The many applications received for assistance in tree planting in the southern States indicate a probable need for field studies in this region during the year.

The compilation of data will be carried on under an improved method for office reference, and with plans for the publication of useful information now gathered. The experimental work under way in cooperation with several colleges and two forest commissions will be systematized to secure the most practical and broadest results, and if possible extended to include some western institutions. Cooperation is planned with the Bureau of Plant Industry, both at some of its dry-farming experiment stations and at some of its experimental farms on irrigation projects.

Several planting plans which have been asked for by owners of large areas will be prepared.

SILVICS.

The best management of the National Forests and of all forested lands in the United States must be grounded on careful and extensive silvical investigations. Because of the growing scope and volume of these studies the former section of silvics was made an office now organized in three sections—field studies, compilation, and library.

FIELD STUDIES.

A study of old cuttings and burns of lodgepole pine was begun in the Rocky Mountains, to find out how fast reproduction takes place and how the method of cutting and the brush disposal affect it. This will give knowledge as to what is the best treatment of lodgepole pine in the different forest types. A special study of the life history of Colorado forests was begun. General silvical records were started at the office of every National Forest supervisor to secure the history of each cutting, and the following reproduction. These will enable the working out of a final plan of silvicultural treatment for each forest type. Field studies of second-growth yellow poplar in Virginia, pointing to the profitableness of growing this species for wood pulp and box lumber, at least in the Middle Atlantic States, and of the aspen, valuable for book and magazine paper, excelsior, and silviculturally as a nurse tree to spruce and white pine, were finished. An extensive field study of all important species of hickory, the present supply of which is nearly exhausted, was begun to determine which kinds have the best wood, and how best to grow a second crop.

There were established in five eastern States, 145 large and 126 small permanent sample plots for studying silvical problems of reproduction, growth, fire, and thinnings, and in the west, 22 sample plots, in 4 National Forests. There are now 458 sample plots in the east, with a total area of 73.22 acres.

FOREST INSECT INVESTIGATIONS.

During the year special explorations were made in cooperation with the Bureau of Entomology in the National Forests of Colorado, to locate old and new work of the Black Hills beetle, make estimates of the amount of insect-infested and killed timber, and determine how to control the insect. One result was to show that an outbreak of this insect can be controlled. The prompt and radical measures adopted by Gen. William J. Palmer in cutting and barking beetle-infested timber during the summer and fall of 1905 and the spring of 1906, in the vicinity of Colorado Springs and Palmer Lake, checked the spread of the beetle.

Maps showing the exact location of the beetle-infested and killed timber were prepared for the Forest Atlas, and these made it easier to get rid of this timber by sale. An important result of these explorations in the different National Forests was to teach forest supervisors and rangers how to detect evidences of insect depredations and the importance of reporting them, with specimens of the insects or their work.

COMPILATION.

The section of compilation collects and systematically organizes for practical use existing silvical information from all possible sources. During the past year silvical notes were compiled for 113 new species. These notes now cover 180 species, including practically all the western and most of the important eastern trees. They comprise data classified as to range, character of distribution by regions, associated species, habit, soil, moisture, and light requirements, reproduction, planting and thinning, rate of growth, yield, sprouting, and diseases of the various species. Besides the notes on species, general silvical data are on file for 60 National Forests.

An increasing amount of silvical data is procured in connection with the regular work of the Service. Special annual reports on the silvical conditions on National Forests are now required from technical assistants. Thirty-one of these reports were received in 1906.

To place its classified data in the most available form for use in the field, the section has begun the publication of silvical leaflets upon the various species. These leaflets contain compilations of all available silvical knowledge and are designed by future revision and addition to form the basis for an American silviculture. During 1906 more than thirty compilations on the silvics of western conifers were prepared for subsequent publication as silvical leaflets. Another line of work pursued by this section was the compilation of silvical data on Pacific coast trees in connection with the forthcoming manual of Pacific coast trees.

LIBRARY.

Of 13,791 books and pamphlets in the library, 4,500 were added during the year and 3,326 were placed in 109 branch libraries established in the offices of National Forest supervisors. Service manuscript reports are being indexed with the general library index.

The photographic collection gained 3,009 mounted prints from the States and Territories and 27 foreign countries, and now contains 27,471 such prints. Rapid growth has been curtailed by restricting the use of field cameras, setting a higher standard of selection, and designating the subjects especially in need of further illustration.

There were sold 882 prints, 163 slides, 5 transparencies, and 7 bromides. Gifts were received of 190 prints and 1 lantern slide, 253 prints were purchased, and 297 were exchanged. Gifts were made of 2,709 prints (as against 1,677 last year) to 32 educational institutions, applicants for illustrations for 118 books and articles, and 18 other applicants. The offices of field men, chiefly on the National Forests, received 949 mounted duplicates. Useful duplicate collections are being made ready for the offices of supervisors.

The collection of lantern slides now contains 3,956 slides, 376 being added this year. The demand for lecture illustrations led to loans of 4,065 individual slides—1,710 more than last year.

WORK FOR THE ENSUING YEAR.

The investigation of logged-over areas will be continued and extended to the yellow pine region. Studies of white and yellow birch and ash will be undertaken. New silvical leaflets will be prepared upon the most important western conifers and a series of leaflets describing the silvical conditions on the National Forests will be begun. The silvical notes on species will be added to, with special attention to methods of silvicultural treatment in practice on the National Forests.

MANAGEMENT.

TIMBER SALES.

The past year showed marked progress in the handling of timber sales on the National Forests, through the added experience of Forest officers and increase in the number of trained men available for the work. Mistakes were less frequent than for the previous year, although the best standard attainable with the means at hand is still too low. Particular attention was given to the location and control of cutting areas and to the marking of timber, in order to leave those parts of the Forests which were lumbered in the best possible condition. Only those trees have been marked for cutting which a Forest officer has determined could be removed without endangering the permanence and productive capacity of the future forest. All healthy young trees of desirable species have been carefully preserved in the logging, and where they were not sufficient as a basis for a second crop, older trees of the same species have been left standing to seed up the ground. Wherever practicable, mature trees of kinds which yield inferior timber have been harvested to improve the quality of the stand. During the past year this gradual elimination of undesirable trees from the Forest was carried much further than before, since markets were found for large quantities of material which had hitherto been considered unsalable or of little value. For example, the use of white fir, heretofore considered unmerchantable throughout the West, has increased until in many localities it is practically equal in value to species which have long had standing in the lumber trade.

Similarly, a market was found in Utah for aspen, which has heretofore been regarded as unsalable. On the Pacific coast western hemlock sold for prices which indicate that its value as a commercial species has been well established by Forest Service tests.

In timber sales on the National Forests it is invariably required that the brush from the felled trees be disposed of so as to reduce both

the danger from fire and the damage to the Forest should fire occur. Experiments conducted during the past year show that the best way to dispose of brush is not everywhere the same. Where the fire danger is great, it has proved most effective to pile all brush away from living trees and to burn it during the wet season. Where the fire danger is slight, the brush is lopped and left scattered on the ground, where it soon decays and adds to the organic constituents of the soil. In every timber sale, therefore, local conditions are carefully studied to determine how best to dispose of the brush and débris after logging.

Full use of the merchantable portion of every tree cut is insisted upon. As a result, lumbermen in the West have come to realize that the cutting of low stumps and the using of all trees as far into the tops as they are merchantable is of actual financial benefit to them, and the close utilization of all timber felled is spreading from the National Forests to private holdings.

During the past year applications were received to purchase timber on nearly every National Forest. The greatest demands were for timber from the lodgepole pine forests of the Rocky Mountains in Wyoming and Montana. A number of applications were received for timber on the Forests in the far Northwest, where the stand of timber is particularly heavy. These Forests have previously been considered too removed from recognized lines of transportation to justify logging operations. Moderately large sales were made in Idaho, Washington, and Oregon, and the demand from these regions is likely to increase.

Timber on Forests where the supply is very limited is reserved entirely for the use of settlers living in or near them, who would otherwise be put to great expense to meet their needs. Sales to supply the general market were made only where the supply of mature timber exceeds the local need.

The use of the timber resources of the National Forests was encouraged throughout the year. Three times as much timber was sold as in the fiscal year 1906. The following table shows for each State the amount and value of the timber sold. Since in many sales more than one year is allowed for removing the timber, the amount sold largely exceeds the amount cut and paid for.

Timber sold on the National Forests, July 1, 1906, to June 30, 1907.

State or Territory.	Amount.			Value.
	Feet B. M.	Cords.	Linear feet.	
Alaska	4,032,020	1,541	32,300	$2,426.50
Arizona	110,898,350	13,464	1,500	385,098.28
California	174,054,537	14,702	49,140	321,353.47
Colorado	42,205,077	11,121	40,100	77,536.88
Idaho	76,156,276	8,422	90,900	165,430.54
Montana	134,104,057	71,274	6,700	529,294.71
Nevada		7		21.75
New Mexico	59,097,988	6,853	514,318	159,196.74
Oklahoma		29½		103.76
Oregon	28,643,589	2,311	3,377	48,526.50
South Dakota	18,533,092	12,622		24,695.27
Utah	19,877,095	4,151	38,000	49,327.05
Washington	49,014,300	11,164	398,000	125,061.89
Wyoming	233,726,210	898		644,203.26
Total	950,342,591	158,257½	1,174,335	2,532,275.60

For every timber sale the actual value of the timber has been determined through study of the timber itself, its accessibility, and the market conditions of the region. Great care was taken to avoid the fixing of arbitrary values not justified by local conditions. The advertisement for competitive bids in all sales of timber for more than $100 in value still further insured the disposal of timber from National Forests for neither more nor less than its actual market value.

When rights of way are granted within National Forests, payment is required for the actual value of all timber necessarily cut or destroyed. The most important case of this kind during the past year was that of the Chicago, Milwaukee and St. Paul Railway Company. The right of way of this railroad, 200 feet wide, runs through the Helena, Lolo, Coeur d'Alene, and Washington Forests. The company agreed to clear, and keep clear, as a safeguard against fire, additional strips from 50 to 150 feet wide, according to the fire risk, on each side of its right of way, and to pay the market value for all merchantable timber cut.

Not only is timber sold from the National Forests, but it is also given away under the regulations providing for the free use of timber by settlers, prospectors, miners, and others who may not reasonably be required to purchase. Full advantage of these regulations has been taken by the people living in the vicinity of National Forests, and large quantities of saw timber, fuel, and fencing are taken every year for use on ranches and in developing mining claims and for other domestic use. During the past year more than 15,000 permits to take timber free of charge from National Forests were issued. The timber involved was valued at more than $75,000. The cutting of timber given away under free-use permit is carefully regulated so as to provide for the safety of the Forests, as in timber sales, but particular attention is given to insure that settlers obtain timber which they desire, easily and quickly.

The readiness with which timber may be had by purchase and under the free-use regulations has resulted in the almost complete absence of timber trespassing on National Forests during the past year. By far the larger number of the trespasses reported during the year were committed before the timber involved was included within a National Forest. Some of the trespassers themselves notified the Forest officers that they had cut the timber, and offered settlement. The total receipts from the settlement of timber trespasses during the year were $65,536.32.

RECONNAISSANCE.

To guide the Service in selling National Forest timber, systematic estimates of the total stand of merchantable timber of the different species were carried forward vigorously. A detailed working plan was prepared during the past year for Henrys Lake National Forest, in Idaho, to determine how much timber may be cut from it annually, without impairing the supply required to provide for local needs. Plans for regulating the cut on all National Forests were also taken up on the basis of the best available estimates and the present demand.

Data were collected for the preparation of volume tables of western yellow pine, and a careful study of the amounts and grades of lumber sawed from National Forest timber was begun.

COOPERATION.

At the request of the Secretary of War, recommendations were made for the conduct of a sale of part of the dead and mature timber on the Fort Wingate Military Reservation in New Mexico. Supervision of the cutting was placed in the hands of a member of the Forest Service, which also involved the running of interior lines and the marking of the timber to be cut on 1,240 acres. This work will probably continue for several years.

At the request of the Secretary of the Interior, field examinations of logging conditions and timber values were made on Indian lands which under the law were to be sold. In Indian Territory recommendations were made for the sale of timber on certain allotments in accordance with the act of April 26, 1906. As a result of the investigation the Indians, for whose benefit the timber is to be sold, will receive a sum greatly in excess of what otherwise would have been realized by them.

Cooperative State forest studies were carried on with California, Delaware, Missouri, and Kentucky. The work in California included a commercial tree study of the redwood and the completion of a series of studies of the forests of the State.

In Delaware a careful study of the forest resources of the State was made and a report issued, in cooperation with the Delaware Agricultural Experiment Station. A report was prepared discussing the present conditions and making recommendations for their improvement. Special attention was paid to the comparative value of the forested lands for agriculture and for the production of timber.

Cooperation with the Missouri Agricultural Experiment Station secured information concerning the forest resources of the Ozark region and a basis for recommendations concerning a State forest policy.

In Kentucky work was begun on a study of forest conditions of the State in cooperation with the State Board of Agriculture, Forestry, and Immigration.

During the year 46 owners of timberlands and 45 woodlot owners applied for field examinations and advice for the management of their property in 20 States and Territories. In addition to the request for field work, a large number of private owners received advice concerning the use and improvement of their forest lands.

It was learned through letters of inquiry sent to private owners for whom working plans have in the past been made that fully 75 per cent have adopted the plans laid down for them and are now lumbering conservatively or in some other way applying practical forestry.

THE FOREST ATLAS.

During the year a radical change was made in the methods of recording, classifying, and making available for reference upon maps the information concerning the forests of the country, and especially

the National Forests, gathered by the Service. A scheme was adopted which improved and standardized the methods employed, both in field and in office work. By the use of graphic symbols like those of the U. S. Geological Survey and the Coast and Geodetic Survey, record is made of the character of the land and of the forest, its ownership, grazing conditions, and other matters. To take charge of the maps on which appear the data thus gathered and to keep them always up to date, a special section, that of "The Forest Atlas," was created.

Folios of the more important Forests are being printed for the use of the field men. Others are duplicated by photography, and copies are furnished to supervisors. The work of preparing these maps of the National Forests was done in cooperation with the U. S. Geological Survey, which already had carefully prepared topographic maps of much of the country now included within the National Forests.

GRAZING.

RANGE CONDITIONS.

The favorable conditions of the preceding year continued through the past season. The crop of grass and other forage was unusually good. Stock grazed upon the National Forests made good weight, and losses were very small, except that the extremely cold weather in the early spring caused in some localities a heavy loss of lambs, of which the crop was generally only fair.

The heavy fall of snow during the last winter made it impossible to reach many of the summer ranges on the usual opening date, and in many cases the feed was from two to three weeks late. In consequence the summer grazing season on the higher ranges this year will be a short one and there will be an abundance of feed for the stock which regularly graze there.

The general conditions on the National Forest range are very satisfactory. Many letters from users of the range report an improvement in the weight and condition of their stock and a decrease in losses from straying and other causes. Most of the stockmen who use the range are well satisfied with the results of regulating the grazing, and are giving hearty support to the Forest officers in their work of administration.

CONTROL.

The regulation of grazing was applied on 50 new Forests. On all the National Forests which were created after March 1, 1907, and on all additions to the older Forests which were made subsequent to that date, the stock which had regularly occupied the range were allowed to remain during the season without the payment of any grazing fee.

In some of the Forests which have been under administration a sufficient length of time to secure an improvement in forage conditions an increase was made in the number of stock allowed, while in a few newly created Forests it was necessary to make reductions in order to stop damage from overgrazing.

PERMITS ISSUED.

In the 142 Forests which were under administration prior to March 1, 23,662 applications for grazing permits were approved by the Forest officers in charge, as follows:

Grazing permits approved.

State or Territory.	Cattle and horses.			Sheep and goats.	
	Permits.	Stock for summer season.	Stock for year-long season.	Permits.	Stock for summer season.
Arizona	769	36,517	80,153	103	287,368
California	2,268	128,761	21,621	282	386,142
Colorado	2,757	213,670	8,845	224	446,917
Idaho	2,035	115,126	3,973	609	1,825,484
Kansas	15	2,190	600		
Montana	1,836	126,730	13,371	160	480,852
Nebraska	58	24,686	1,133		
Nevada	142	16,448	373	19	89,450
New Mexico	1,283	11,173	61,010	465	376,408
Oklahoma	32	222	2,017		
Oregon	1,255	111,819	3,207	495	940,154
South Dakota	453	13,475	20		
Utah	4,076	115,489	891	1,150	917,963
Washington	367	19,551	113	104	172,323
Wyoming	633	65,148	1,826	198	734,022
Total	17,979	1,001,005	199,153	3,809	6,657,083

The average number of cattle and horses grazed under each permit was 67 head and the average number of sheep 1,748 head. This shows conclusively that the small owners have preference in the use of the National Forest ranges.

The total receipts on account of the above permits were $857,856.83.

Only 8 per cent of the applicants failed to pay the grazing fees and to accept the permits applied for, and without doubt many of these will accept their permits before the close of the season. This is exactly the same percentage as last year, which shows the steady condition of business and indicates general satisfaction with the management of grazing upon the Forests.

That stock might be driven across the National Forests in transit between summer and winter ranges and to reach points of shipment 833 crossing permits were issued by the officers in charge of 66 Forests, covering 36,807 head of cattle and horses and 2,051,881 head of sheep and goats.

No permit is required for stock which is driven along a public highway, or when National Forest lands will not be grazed upon en route.

Applications were made by 616 owners or lessees of private lands, within 52 Forests, to drive 35,674 head of cattle and horses and 182,622 head of sheep and goats across Forest lands to reach 836,014 acres of private land. The owners or lessees of 730,855 acres of this land made special agreements, waiving the right to the exclusive use of the land and allowing stock permitted to graze on the National Forests to enter upon it. In exchange for this concession permits were issued allowing 29,170 head of cattle and horses and 159,851 head of sheep and goats to graze upon the National Forests free of charge.

Under a cooperative agreement entered into with the land board of the State of Utah, by which the State in return for the use of its lands within National Forests sells permits to graze a stipulated number of cattle, horses, and sheep upon the National Forests within that State, 85 permits were issued allowing 747 head of cattle and horses and 12,242 head of sheep to be grazed upon 8 Forests.

ADVISORY BOARDS.

The advisory boards of live stock associations, representing the majority of the users of certain defined ranges, were recognized by the Forester for 20 of the National Forests, and satisfactory adjustments of important grazing questions were made by the Forest officers in cooperation with them.

GRAZING TRESPASSES.

During the past fiscal year 183 cases of grazing trespass were reported by the officers in charge of 44 of the National Forests. In 165 of these cases propositions to make settlement by the payment of damages were accepted, and civil action was closed. The total amount collected for grazing trespass damages was $5,576.80.

Of the unsettled cases, 3 are those of trespassers who are under bond to appear before the United States jury on a charge of criminal trespass, 2 are pending in court, and the remaining 13 were reported during the months of May and June, when the time was too short to secure settlement before the close of the year.

QUARANTINE LAWS AND REGULATIONS.

The Bureau of Animal Industry required all sheep permitted to graze upon the National Forests of Arizona, New Mexico, Colorado, Utah, Idaho, Nevada, and Oregon, and also upon the Tahoe, Stanislaus, and Diamond Mountain National Forests of California and the Wenaha National Forest of Washington, to be inspected before entering the National Forest ranges and to be dipped when found to have been exposed to or infected with scab. Upon the Medicine Bow National Forest of Wyoming, on account of the prevalence of scab among the stock grazed upon the adjoining ranges, all cattle were required to be dipped before entering.

The State and Territorial authorities have in all cases heartily cooperated with the Government inspectors, and this disease will soon be entirely eradicated from the stock grazed upon the National Forest ranges.

WORK OF THE ENSUING YEAR.

The regulation of grazing along the same lines followed in the past will be continued and extended to the Forests created since March 1. As fast as improved condition of the range makes it possible the number of stock permitted to graze will be increased. No change will be made in the general scale of charge, but in certain cases local changes will be made to equalize the rate.

To give the stockmen the very best possible use of the National Forest ranges, special effort will be made to encourage the organiza-

tion of associations, so that through advisory boards the stockmen may assist in the settlement of matters affecting their interests. Through cooperative work great improvement can be made in the condition of the ranges and the method of using them, and the result will be beneficial to all interests concerned.

DEVELOPMENT.

FORAGE INVESTIGATIONS.

Because of the urgent need for improvement in the production of forage upon ranges which have been injured by overgrazing, the question of reseeding received special attention during the past year. Investigations were commenced in cooperation with the Bureau of Plant Industry to discover under what conditions and in what localities it will be possible to secure natural reproduction of the valuable forage grasses and plants, and also how and where it will be possible to plant new seed successfully.

WORK OF THE ENSUING YEAR.

Studies will be made of the manner in which stock is now being handled upon the ranges, with a view to stopping any unnecessary damage and ascertaining during what period each range can be used with the most economy, and also of the life of the grasses and plants to learn how to secure natural reseeding of the ranges.

Experiments will be made in fencing certain ranges and in trying new methods of handling stock within the pastures. Experiments will also be made in planting both natural and imported seed upon sections of the range which will be open to grazing, as well as upon fenced areas, from which stock will be excluded.

It is expected that by the close of the next fiscal year it will be possible to report the results of the first season's investigations and experiments.

PRODUCTS.

In each of the three offices of this Branch—Wood Utilization, Wood Preservation, and Publication—the volume of work handled was greater and the results obtained were better than ever before.

WOOD UTILIZATION.

The Office of Wood Utilization is rapidly becoming a recognized authority throughout the United States upon the subjects which it handles. Its efforts to ascertain the amount of the annual drain upon our forests and to point out the most economical means of utilizing forest products are doing much to bring about a public realization of the necessity for taking prompt and vigorous measures to insure a future timber supply.

WOOD CHEMISTRY.

The work on zinc estimations, to discover the penetration of zinc chlorid in treated timber, was completed, and analyses were also made of a number of samples of treating-plant solutions.

The physical properties of creosote oils were carefully studied, with a view to perfecting methods for grading creosotes and detecting the presence of substances other than the distillates from pure coal tar. Methods for the detection of oils of the paraffin series in the presence of creosote and for estimating the moisture in creosoted wood were worked out.

A study to determine the variation of the soluble constituents of chestnut during the different seasons of the year, and the rate at which these materials leach from the cut timber, was begun.

Wood distillation was studied at the leading commercial plants in both the North and the South. Particular attention was given to the possibility of utilizing waste material by means of distillation, and the uses of the resulting products. A laboratory study was made of the turpentine obtained by the distillation of southern pine, which lays the foundation for scientific methods of grading it.

The technical methods of analyzing tanning materials received attention, and a study in cooperation with a San Francisco lumber company to determine the amount of tannin present in the waste from redwood lumbering was begun.

The equipment of the wood-pulp laboratory at South Boston was completed. The woods from which pulp was prepared include red spruce, white fir, loblolly pine, scrub pine, tupelo, hemlock, tamarack, and cypress. It was shown that all of these woods can be made to yield a merchantable pulp. The samples obtained were in some cases superior to ordinary commercial grades of unbleached pulp.

COMPUTING.

The section of computing received and tabulated a very large volume of data, including 21,000 log tallies, 11,850 tree analyses, 1,980 acre surveys, 590 sample plots, 10,100 card schedules, monthly weights for twelve months, of 1,550 poles, 10,000 ties, and 10,000 cross-arms and computations for 1,250 timber tests. Miscellaneous work included the checking of scale books, for timber sales on the National Forests, and numerous less important items.

The compiling and editing of forest tables covering all measurements thus far collected has been undertaken, supplementary measurements to be collected during the coming field season, with a view to the preparation of tables of stand, growth, volume, and form for all the more important timber trees in the National Forests. Similar data for the important trees of the Southern, Central, and Northeastern sections will be compiled as soon as possible.

DRAFTING.

The section of drafting made maps and did general graphic work for 100 distinct projects, about 90 per cent of which were directly connected with the National Forests. The output for the year included 1,489 maps of different kinds and 302 miscellaneous drawings. Map files for reference were also kept. Maps of the National Forests were prepared for publishers of maps and school geographies.

TIMBER TESTS.

Information on the mechanical and physical properties of wood is in strong demand. The structural timber tests were put to immediate use by the American Railway Engineering and Maintenance of Way Association and the American Society for Testing Materials in drawing up standard specifications of such timbers. The work promoted interest in a more scientific use of wood, which is synonymous with a more economical use.

The tests were made at laboratories run in cooperation with Yale University, Purdue University, the University of California, the University of Oregon, and the University of Washington. To coordinate closely the work of these different laboratories an office having general supervision over all the work was established at Washington early in 1907.

WORK COMPLETED DURING THE YEAR.—There were made during the year 10,726 mechanical tests, of which 1,871 were in bending, 7,957 in compression, and 898 in shearing.

These tests developed, among other facts, that white fir and Engelmann spruce have about the same strength as eastern spruce, while lodgepole pine is almost as strong as loblolly pine; that in small pieces sound dead timber of these species has about 85 per cent of the strength of live, and that these woods are suitable for many purposes for which more valuable woods are now being used; that various species of eucalypts compare favorably in strength with our strongest native woods, and will probably make suitable material for vehicles and implements; that insulator pins of live oak and rock elm have, respectively, 75 and 65 per cent of the strength of locust pins; that in railroad ties of white and red oak, loblolly pine, hardy and common catalpa, and chestnut, with spikes of the common, channeled, and screw types, the channeled spike has 12 per cent more holding power than the common spike and the screw spike about twice that of the common spike, while white oak has the greatest holding power of the species tested; that western hemlock timber has much structural merit, being a little stronger than loblolly pine; and that Norway pine is weaker than tamarack, and both are weaker than Douglas fir, longleaf pine, loblolly pine, and western hemlock.

Tests of loblolly pine bridge stringers secured, with the previous work upon this species, sufficient data to form the basis of an authoritative future report upon its mechanical and physical properties. Data were secured as to the effect of knots and other defects, rate of growth, specific gravity, proportion of summerwood, and various other qualities on the strength of large Douglas fir timbers. Tests on vehicle woods covered spokes, axles, wagon and cultivator poles, and buggy shafts, and developed that the discrimination made by the trade against red hickory is not justified in so far as its strength is concerned. Tests on wagon axles showed the relative value of maple and hickory, and the benefits derived from various forms of trussing. The results of these tests will enable vehicle manufacturers to use material more economically and assist them to find satisfactory substitutes for woods that are now hard to secure.

Tests to determine the fiber-saturation point and moisture strength relations for loblolly pine, Douglas fir, *Eucalyptus globulus*, western

impartial information. It has been able to discourage fraudulent methods and the investment of capital in processes founded on an unsound basis, and now largely directs the trend of investigations and practice in this country. It has obtained results of practical value to the small consumer by the discovery of a simple and practical method for preserving fence posts, shingles, and other farm timbers. The entire expense of extensive investigations is borne by the cooperators.

Study of the general subject of wood preservation involves attack upon a series of subordinate problems which center in the seasoning of wood. Precise knowledge of the rate at which seasoning takes place and the effect of such modifying factors as previous water-soaking, different methods of exposure to the air, time of year when the timber was cut, and the conditions under which it was grown, is essential in order to devise the best practical methods of preserving wood. All of the experimental timber collected in connection with the projects was weighed at regular intervals. A considerable portion of it was accurately measured when freshly cut, when partially seasoned, and when air-dry—and in this way exact data on the shrinkage and the rate of seasoning were obtained. After treatment the material experimented upon was in each case put into service under conditions which will test the relative preserving power of the different processes.

WORK COMPLETED.

The following work was completed during the year:

Experiments in seasoning and treating arborvitæ telephone poles at Escanaba, Mich., in cooperation with the American Telephone and Telegraph Company, and chestnut poles at Parkton, Md., in cooperation with the same company, resulted in a practical method for treating these poles on a commercial scale.

Experiments on yellow pine cross-arms at Norfolk, Va., made it possible to devise a system for handling, grading, seasoning, and treating this and similar classes of material which will insure cheaper, stronger, and more durable timber.

Experimental treatment of hemlock and tamarack cross-ties at the plant of the Chicago and Northwestern Railway Company, under cooperation with the company, resulted in a complete series of recommendations for the handling and treatment of the ties from the time they leave the woods until they are finally placed in the track. A marked improvement in the efficiency of the plant has followed, though there has not yet been time for all the recommendations to be put into effect.

Seasoned Douglas fir, western larch, and giant arborvitæ ties, part of which had been treated, some with creosote and some with zinc chlorid, were laid in the track of the Northern Pacific Railway Company for a test of durability and of the effectiveness of different kinds of tie plates and other devices for reducing mechanical wear by the rails.

Dead lodgepole pine fence posts from the Henrys Lake National Forest were treated with creosote in an open iron tank to discover the most efficient process at the lowest cost. The work was very successful and will have practical value to the ranchers and other timber users of the region.

lumber in the United States were compiled at short intervals. Stumpage prices were obtained for the different commercial species throughout the United States, furnishing data especially useful to the Service in its timber sales.

Addresses were delivered before 19 meetings of lumber manufacturers, wood users, and engineers. Thirteen trade bulletins furnished short statements of the scientific and practical results of investigations, and were widely used by the trade and technical journals.

WORK OF THE ENSUING YEAR.

The section of wood chemistry will study wood preservatives, wood distillation problems, and pulpwood. There are great possibilities in the utilization of wood waste by chemical means, and the Forest Service will energetically seek their development. To secure increased efficiency in administration and operation, the chemical laboratory will be brought from New Haven and the pulp laboratory from Boston to Washington, where they will be combined under one roof. The possibility of profitably distilling fat Douglas fir will be studied on the ground, and in the South field work will seek methods of properly refining and grading yellow pine distillation products under commercial conditions. The leading yellow-pine manufacturers have offered to contribute toward this work.

Besides computing forest tables, timber tests, seasoning experiments, tree measurements, and other lines of Service work, the section of computing will gather in the field supplementary measurements on Douglas fir, sugar pine, and possibly several other Pacific Coast species.

The section of wood uses will continue to secure accurate and authoritative data upon the uses, properties, and market conditions of the commercial timbers of the country, and also to develop fields of usefulness for timber that is at present largely wasted. The mechanical and physical properties of redwood timbers and of the California tanbark oak, large quantities of which are at present being cut for the bark only, will be studied. The work upon California eucalypts will be continued.

The study of the effect of different methods of drying and treating woods will be continued and the tests of Douglas fir car sills will be completed. It is expected to begin a series of tests upon creosoted Douglas fir and yellow pine bridge stringers in cooperation with some of the leading railroad companies. Tests upon shortleaf pine from Arkansas comparable with those already made upon loblolly and longleaf pine will establish the relative values of these three important southern woods.

Field studies upon the market conditions and the uses of some of the timbers found in the National Forests will be supplemented by tests made with the special purpose of demonstrating the usefulness of species which are now regarded with little favor. Work has been started on incense cedar, amabilis fir, and western larch.

WOOD PRESERVATION.

While the field of wood preservation in the United States is broadening, the principles of the different processes are now receiving closer scrutiny. The Forest Service is looked to for reliable and

impartial information. It has been able to discourage fraudulent methods and the investment of capital in processes founded on an unsound basis, and now largely directs the trend of investigations and practice in this country. It has obtained results of practical value to the small consumer by the discovery of a simple and practical method for preserving fence posts, shingles, and other farm timbers. The entire expense of extensive investigations is borne by the cooperators.

Study of the general subject of wood preservation involves attack upon a series of subordinate problems which center in the seasoning of wood. Precise knowledge of the rate at which seasoning takes place and the effect of such modifying factors as previous water-soaking, different methods of exposure to the air, time of year when the timber was cut, and the conditions under which it was grown, is essential in order to devise the best practical methods of preserving wood. All of the experimental timber collected in connection with the projects was weighed at regular intervals. A considerable portion of it was accurately measured when freshly cut, when partially seasoned, and when air-dry—and in this way exact data on the shrinkage and the rate of seasoning were obtained. After treatment the material experimented upon was in each case put into service under conditions which will test the relative preserving power of the different processes.

WORK COMPLETED.

The following work was completed during the year:

Experiments in seasoning and treating arborvitæ telephone poles at Escanaba, Mich., in cooperation with the American Telephone and Telegraph Company, and chestnut poles at Parkton, Md., in cooperation with the same company, resulted in a practical method for treating these poles on a commercial scale.

Experiments on yellow pine cross-arms at Norfolk, Va., made it possible to devise a system for handling, grading, seasoning, and treating this and similar classes of material which will insure cheaper, stronger, and more durable timber.

Experimental treatment of hemlock and tamarack cross-ties at the plant of the Chicago and Northwestern Railway Company, under cooperation with the company, resulted in a complete series of recommendations for the handling and treatment of the ties from the time they leave the woods until they are finally placed in the track. A marked improvement in the efficiency of the plant has followed, though there has not yet been time for all the recommendations to be put into effect.

Seasoned Douglas fir, western larch, and giant arborvitæ ties, part of which had been treated, some with creosote and some with zinc chlorid, were laid in the track of the Northern Pacific Railway Company for a test of durability and of the effectiveness of different kinds of tie plates and other devices for reducing mechanical wear by the rails.

Dead lodgepole pine fence posts from the Henrys Lake National Forest were treated with creosote in an open iron tank to discover the most efficient process at the lowest cost. The work was very successful and will have practical value to the ranchers and other timber users of the region.

The study of wood paving terminated with the laying, in cooperation with the city of Minneapolis, of an experimental pavement composed of different woods laid in different ways.

WORK IN PROGRESS.

On the following projects work is in progress:

In California experiments were made in seasoning poles of eucalyptus, western yellow pine, and giant arborvitæ from Washington. Yellow pine poles were treated by the open-tank process, with excellent results. The attempt to regulate the absorption of the oil was particularly successful, and a penetration of from 2 to 4 inches was secured at will. The experiments aroused great interest among both owners and consumers of structural timber in California, and promise not only to promote a more conservative utilization of the present timber supply, but also to bring into use new species, which, untreated, are not suited for structural use.

The study of the handling, seasoning, and treatment of mine timbers, begun last year in cooperation with companies in the anthracite region of Pennsylvania, has opened a field of importance. Artificial preservation of mine timbers had previously been thought to be impracticable. The Forest Service devised a simple and inexpensive treatment, and conclusively proved its economy. Among the preservatives used were common salt, magnesium chlorid, zinc chlorid, carbolineum, and many different grades of creosote. The open-tank method of treatment proved the most satisfactory, though brush applications were found of value when more thorough impregnation is impracticable. Large and quick results in promoting economy in the use of timber and increased knowledge of how to preserve wood effectively are looked for. The cooperating company is now erecting a plant, designed by the Forest Service and erected under its supervision, for commercial treatments.

The protection of wood employed in various marine uses against borers was taken up. Creosote was found to be the best protective agent that has been used. Plans are now drawn up for cooperative study of methods of treating timber used in building barges, scows, lighters, and other craft, both fresh and salt water, and for piling.

A study of the manufacture of distillates of coal and petroleum tar oils, and of the effect on the composition of creosote of the different methods used, secured better knowledge of the grades of creosote on the market and the precautions which must be taken to avoid adulterated or inferior oils. The subject intimately concerns the success of wood preservation in the United States.

Work is under way to compile and index all extant seasoning and treating data.

Addresses were made before the annual meetings of the Wood Preservers and the American Railway Engineering and Maintenance of Way associations, and before the Philadelphia and Reading Coal and Iron Company Employees' Association.

WORK OF THE ENSUING YEAR.

The lines of work now in hand will be continued. Simple and economical methods of preserving telephone and telegraph poles, cross-ties, mine timbers, vineyard stakes, and all other timbers exposed

to rapid decay, the supplies of which are drawn from National Forests, will be sought. Success will enhance the value of the National Forests by opening up uses for dead timber and timber of inferior species. In cooperation with the agricultural departments of several Southern and Middle Western States experiments and demonstrations will be conducted in preserving for fence posts and other farm purposes such easily decaying species as loblolly pine, cottonwood, and willow, which are plentiful where the more durable woods have been exhausted or never grew. Preservation by an adaptation of the open-tank method is so simple and inexpensive as to permit every farmer to erect a tank and treat his own timber.

PUBLICATION.

The office received for review 102 manuscripts, aggregating 3,712 typewritten pages. Of these, 66 were submitted for publication, 2 were returned to the authors for revision, 3 were unavailable for publication, and 31 are in the office. There were printed 61 new publications, with a total of 2,109,000 copies, reprints of 48 circulars, 11 Yearbook extracts, 10 bulletins, 1 annual report, and 1 manual, with a total of 497,100 copies, and revisions of 4 circulars, with a total of 342,000 copies.

The office prepared 25 original articles, 16 press bulletins, with a total of 130,000 copies printed, and 14 trade bulletins, of which about 3,000 copies were printed.

Schemes for the distribution of all publications are now prepared in this office. Copies of all publications issued, except bulletins, of which the editions authorized by law were so small as to prohibit it, were sent to a special mailing list of 5,187 names. By the use of a general classified mailing list of over 693,000 names, descriptive notices of bulletins, circulars of information, and other publications of general interest were sent to those concerned in the subject-matter of the publications.

Educational work, which is in charge of the Office of Publication, was further extended through addresses made before 158 meetings in 32 States.

WORK OF THE COMING YEAR.

Besides continuing the lines of work of the past year, cooperation will be sought with school-teachers and officers of public instruction to broaden the work in education. Publications for the use of teachers will be prepared.

REPORT OF THE CHEMIST.

U. S. DEPARTMENT OF AGRICULTURE,
BUREAU OF CHEMISTRY,
Washington, D. C., November 13, 1907.

SIR: I have the honor to transmit herewith the annual report of the Bureau of Chemistry for the year ending June 30, 1907, together with an outline of the work proposed for the year ending June 30, 1908.

Respectfully,

H. W. WILEY, *Chief.*

Hon. JAMES WILSON, *Secretary.*

INCEPTION OF THE WORK FOR THE ENFORCEMENT OF THE FOOD AND DRUGS ACT.

During the year ended June 30, 1907, an unusual development in the work of the Bureau of Chemistry has taken place. The work in connection with the execution of the laws relating to the importation of foods has been gradually increasing during the past four years and the various lines of work conducted in the different laboratories of the Bureau have continued to grow in number and importance, notwithstanding the demands made on the facilities of the Bureau by that portion of the work relating to adulterated foods and drugs.

The greatest increase, both in work and personnel, however, has been due to the enactment of the food and drugs act of June 30, 1906, which became effective on the 1st day of January, 1907. Previous to this date it was necessary to carry out the provision of the law providing for the establishment of regulations. To this end a committee, consisting of H. W. Wiley, Chief of the Bureau of Chemistry, S. N. D. North, Director of the Bureau of the Census, Department of Commerce and Labor, and James L. Gerry, Chief of the Division of Customs, Treasury Department, acting for the Secretaries of Agriculture, of Commerce and Labor, and of the Treasury, respectively, prepared a set of tentative regulations. Great care was exercised in the preparation of these regulations, not only that the provisions of the law should be fully executed, but also that there should be no unnecessary annoyance or burden placed upon the trade. It was deemed advisable before the promulgation of these regulations to hold public hearings in order to obtain the opinions of manufacturers and dealers. To this end, hearings were held in New York during the month of September, 1906, and were continued for a week. Upon the adjournment of these hearings the committee met frequently for the purpose of formulating the regulations, which were finally completed, signed, and promulgated on October 17, 1906, as Circular 21 of the Secretary's Office. As soon as these regulations were published a great flood of correspondence poured into the Bureau of Chemistry, necessitating a

large increase in the clerical force. At the same time, also, arrangement was made for increasing the chemical force, to be ready for the increased activities of the work incident to the enforcement of the law on the first of January, 1907.

Between January 1 and June 30, 1907, the personnel of the Bureau of Chemistry was more than doubled, the increase being divided between the clerical force, chemical assistants, and the corps of inspectors. The work incident to the enforcement of the law proved to be of far greater magnitude than had been anticipated, and up to July 1, 1907, no actual prosecutions under the interstate feature of the law had been instituted. During this time, however, a much more rigorous execution of the law relating to imported foods was established. This was possible because under the previous laws the machinery for the inspection and analysis of the imported foods had been already well organized. The only change which was made, therefore, in this service was to transfer the execution of the law from the clause in the appropriation bill provided therefor and place it directly under the food and drugs act of June 30, 1906.

A description of the activities of the Bureau in connection with the inspection of foods and drugs is given under the appropriate divisions in charge thereof.

It will not be out of place, however, to mention in this connection that, although up to the 1st of July no actual cases had been instituted in the courts under the food and drugs act, the moral effect of the act was apparent in every branch of trade connected with the food industry. One of the most gratifying features of this preliminary activity has been the almost unanimous support accorded by the trade to the principles of the act. In the majority of cases manufacturers of food products, as well as dealers therein, have expressed their cordial support of the act and offered their hearty collaboration in securing its enforcement. The importance of this fact can not be overestimated, since the difficulties of enforcing an act, if the entire food trade were opposed to it, would be practically insuperable. Supported, however, not only by public opinion, but also by the active collaboration of producer and consumer, the food law will have that moral support which is absolutely necessary in connection with the statutory provisions to secure more wholesome and properly branded food and drug products for the market.

Statements have been made attributing the rise of prices in certain food products to the enactment and enforcement of the law. It is undoubtedly true that prior to the enforcement of the law many food products of purity and excellence were subjected to the unfair competition of imitations or adulterated articles, sold under the same name, which depressed the price below what was just and normal. It is evident, therefore, that when this unfair competition is withdrawn the prices of such commodities will naturally rise to the normal level. At the same time the consumer will be benefited, because the adulterated, debased, or misbranded articles will fall in price to a normal level, and, though paying a higher price for the pure article, he will be able to secure the inferior or misbranded article at a lower figure. Upon the great factor of prices—namely, supply and demand—the food and drugs act can have no effect whatever. With the increasing population the demand for all the necessities of life increases. If by fluctuation of crops the productive power of the coun-

try varies from year to year, there must be a natural variation in prices. It can not be demonstrated, therefore, in any convincing way that the food and drugs act has increased the prices of foods and drugs except in so far as has been indicated above. To that extent the increase in prices should be welcomed by the consumer instead of regretted, since it prevents the exercise of fraud of which he is the chief victim.

The detailed work of the Bureau will be discussed in connection with the different divisions and laboratories in charge thereof.

BOARD OF FOOD AND DRUG INSPECTION.

The Board of Food and Drug Inspection was created by the Secretary of Agriculture on April 25, 1907, through General Order No. 111. The duties of the Board are to consider all questions arising in the enforcement of the food and drugs act of June 30, 1906, upon which the decision of the Secretary of Agriculture is necessary; to consider and supervise all correspondence involving interpretations of the law and questions arising under the law, and to conduct hearings based upon alleged violations of the food and drugs act of June 30, 1906. The Bureau of Chemistry is charged, under the act, to perform whatever analytical work may be required for the information of the board, which reports directly to the Secretary. The personnel is as follows: H. W. Wiley, Chemist and Chief of Bureau, chairman; F. L. Dunlap, Associate Chemist, and G. P. McCabe, Solicitor of the Department.

APPOINTMENT OF FOOD AND DRUG INSPECTORS.

In February, 1907, a civil-service examination was held to secure inspectors for the enforcement of the food and drugs act of June 30, 1906. Twenty-eight appointments were made, and on June 3 these inspectors reported at Washington for instruction as to the policy to be pursued in the enforcement of the food and drugs act and the practical details of inspection and sampling. They were given lessons in the collection and mechanical preparation of samples within the District of Columbia and the State of Virginia. After more than a week thus employed the force was divided into two divisions, for the purpose of making a tour of the principal manufacturing cities located in the East and Central West. Factories were visited and inspected at Wheeling, Pittsburg, Cleveland, Detroit, Baltimore, Philadelphia, New York, and Boston, under direct supervision of officials of the Bureau. Any unfavorable conditions found in the factories inspected were subsequently discussed with the inspectors, with a view, first, of impressing upon them the necessity of sanitation in the preparation of articles of food and drugs, and, second, for the purpose of acquainting them with the methods of processing and packing generally employed in factories. By June 30, 1907, the inspectors had been assigned and had taken up temporary headquarters in their respective territories. In making these assignments two objects were kept in view, viz, the location of branch laboratories and the strategic position afforded by channels of interstate commerce.

FOOD AND DRUG INSPECTION LABORATORIES.

IMPORTED FOOD INSPECTION.

Six branch laboratories have been in operation at the chief ports of entry for several years, and, as is stated under the Division of Foods, additional laboratories are being installed at ports of entry of lesser magnitude, but at which considerable importations of foods and drugs occur.

Invoices of foods and drugs intended for ports at which no laboratory has been established are forwarded to the Bureau of Chemistry. Samples desired for the purpose of inspection are taken by the customs officer at such ports and forwarded to Washington or to one of the branch laboratories for examination. The chiefs of the branch laboratories have authority to take immediate action regarding shipments which, in their opinion, comply with the law. They are also authorized to take final action in the case of a violation of the law for which a precedent has been established, and may be delegated by the board to hold hearings.

In case of a doubt regarding the violation of the law, and in cases where no precedent has been established through a decision made by the Board of Food and Drug Inspection, the matter is referred by the branch laboratory to the Bureau for final action. Here the report of the laboratory is reviewed by the Division of Foods, after which it is considered by the members of the Board of Food and Drug Inspection, together with any correspondence that may have been received regarding the case. A recommendation is then made by the Board of Food and Drug Inspection to the Secretary of Agriculture, who issues instructions regarding the disposition of the case.

Acting on these instructions, the Chief of the Bureau of Chemistry sends the requisite instructions to the chief of the branch laboratory, who is authorized to request of the appropriate customs officer the release of the shipment, its relabeling, or its transportation beyond the jurisdiction of the United States, as circumstances may require.

INTERSTATE INSPECTION.

Samples of foods shipped in interstate commerce or sold in the District of Columbia and the Territories are secured by the inspectors of the Bureau and forwarded to the laboratory situated in the section of the country in which the respective samples are taken. The reports on individual samples from the inspection laboratories are sent to the Bureau of Chemistry and reviewed by the Division of Foods. If the cases do not appear to be satisfactory from a chemical standpoint, they are held in abeyance without further reference. If the case is considered satisfactory for prosecution because of adulteration or misbranding, the report is referred to the Chief Inspector to determine whether the samples have been legally collected.

If it is found that the sample has been illegally collected, the Chief Inspector takes immediate steps to obtain a new sample, the report on the first sample being held in abeyance until the analysis of the second sample is completed. When the chemical data appear to be sufficient for prosecution and the sample is found to have been legally

collected, the reports are turned over to the Board of Food and Drug Inspection, which Board appoints the time and place of hearing and notifies the dealer. If, after such hearing, it appears that the law has been violated, the Solicitor of the Department refers the case to the proper United States district attorney for prosecution.

BRIEF REVIEW OF THE WORK OF DIVISIONS AND LABORATORIES.

DIVISION OF FOODS.

During the past year the analytical work incident to the study of the influence of preservatives on nutrition has been divided between the Division of Foods, under W. D. Bigelow, chief, and the force recently organized to take special charge of the physiological chemical investigations, the work assigned to the Division of Foods being the determinations of sulphur, phosphoric acid, and moisture. The entire services of three analysts and over one-half the time of a fourth for a period of over three months were required to make these determinations on 1,474 samples.

Studies of the composition of fruit, the changes which take place during the ripening, and the effect of cold storage thereon have been continued. The fruits studied were the strawberry, gooseberry, currant, raspberry, and blackberry. Considerable time has been spent in experimental work upon the manufacture of cider from apples and pears, and the effect of carbonation and sterilization upon their palatability, their keeping qualities, etc. About 150 samples have been examined and a considerable amount of research work done, methods for the determination of the organic acids receiving special attention. This work was conducted in collaboration with the Bureau of Plant Industry and required the services of one chemist for the year.

In the work upon flavoring extracts new methods have been devised for detecting adulteration of essential oils and extracts, and their composition has been studied. About 30 extracts purchased in the open market were examined and analyses made of a number of imported lemon oils.

The study of the effect of cold storage upon the wholesomeness of food has been continued. Samples of chickens, both drawn and undrawn, also of quail, and of eggs which had been placed in cold storage were examined. The study of meat extracts was continued and that of yeast extracts begun. Considerable experimental work has been done upon the methods of analysis for meat products and methods for the detection of glycerin and gelatin. About 90 samples were examined.

Some time was given to the study of methods for the detection of the artificial coating of rice, and valuable information was obtained. The results of the studies made of the analysis of chocolates and cocoas were published under the title "The Determination of Lactose and Butter Fat in Milk Chocolates."

The fuller's earth test for caramel as applied to vinegars was investigated and its usefulness reported to the Association of Official Agricultural Chemists in a paper entitled "The Fuller's Earth Test for Caramel in Vinegar."

During the year the question of the use of sulphur in bleaching food products has been prominently before the chemist and manufacturer. This division has spent considerable time in investigating the methods for the determination of free and combined sulphurous acid in these products and in determining the amounts used at the present time. Samples were obtained from known sources and others were purchased on the open market. Valuable data were obtained both as to the accuracy of the analytical methods employed for detection and the extent of the use of this bleaching agent. Determinations of sulphurous acid were made in 30 samples of hops, 25 samples of dried fruit, and 26 samples of molasses. The dried fruit and molasses were also examined for tin and zinc.

Many other problems in connection with the adulteration of food products are being systematically studied. During the year this division made tests for preservatives on 215 meat samples for the Bureau of Animal Industry. Examinations of domestic food products not heretofore mentioned have been made as follows: Vinegar, 23; wine, cider, and nonalcoholic beverages, 81; edible oils, 39; miscellaneous, including confections, baking powders, coffee substitutes, and preservatives, 225.

IMPORTED FOOD WORK.

The number of chemical analyses in connection with the inspection of imported food products has been constantly increasing. The work done at Washington along this line consists in confirming the results of analyses made in the various branch laboratories and in making the initial examination of food products from ports of entry where no branch laboratories have been established. In this way 1,289 samples of imported foods have been passed upon at Washington. Under the scheme of organization of the Bureau for the past year, the six original branch laboratories (at New York, Boston, Philadelphia, Chicago, New Orleans, and San Francisco) were considered as a part of the Division of Foods. The following is a tabular statement of the shipments examined:

Statement of imported food samples received by the Bureau of Chemistry, and results of inspection reported from July 1, 1906, to June 30, 1907.

Result of inspection.	Beer.	Miscellaneous beverages.	Coffee and cocoa.	Distilled liquors.	Egg products.	Fish.	Fruit products.	Macaroni.	Meat.	Miscellaneous.	Mushrooms.
Found contrary to law:											
Released without prejudice to future decisions in similar cases	25	57	35	2	26	78	97	10	107	61	20
Admitted after the labels were changed to harmonize with the law	-----	9	11	-----	-----	40	40	16	4	9	1
Required to be reshipped beyond the jurisdiction of the United States or destroyed	-----	8	1	-----	19	12	39	-----	10	8	8
Total	25	74	47	2	45	130	176	26	121	78	29
Found to comply with the law	78	183	25	6	129	651	410	31	159	331	93
Total number of samples examined from invoices detained	103	257	72	8	174	781	586	57	280	409	122
Samples taken from invoices not detained	-----	1	3	-----	-----	-----	-----	-----	-----	21	2

***Statement of imported food samples received by the Bureau, etc.*—Continued.**

Result of inspection.	Olive oil.	Oils and fats.	Spices and condiments.	Vegetables.	Vinegar.	Wine.	Chocolate.	Cheese.	Drugs.	Total.
Found contrary to law:										
Released without prejudice to future decisions in similar cases	60	16	105	171	33	10	32	30	9	984
Admitted after the labels were changed to harmonize with the law	6	3	5	20	12	1	----	2	----	179
Required to be reshipped beyond the jurisdiction of the United States or destroyed	2	----	23	36	3	2	----	----	----	171
Total	68	19	133	228	48	13	32	32	9	1,334
Found to comply with the law	310	36	290	936	83	157	39	117	13	4,077
Total number of samples examined from invoices detained	378	55	423	1,164	131	170	71	149	22	5,411
Samples taken from invoices not detained	----	----	1	2	----	2	----	4	----	36
Samples inspected on the floor of the examiner's room in appraiser's stores and invoices not detained	----	----	----	----	----	----	----	----	----	28,137
Shipments which entered into consumption before receipt of notice to relabel	----	----	----	----	----	----	----	----	----	8

Very little opportunity for research work is afforded in these laboratories. One paper, however, on "Formic Acid as a Preservative," has been prepared by the Boston branch laboratory.

A very large portion of the time of the chief of the division has been taken up with the installation of additional branch laboratories. The plans and specifications for 10 food and drug inspection laboratories have been prepared and suitable quarters chosen. The laboratories will be established at St. Paul, Detroit, Savannah, Seattle, Buffalo, Kansas City, Denver, Galveston, Portland (Oreg.), and Cincinnati.

The passage of the food and drugs act has greatly increased the volume of correspondence handled by the division; and this division has shared with others in the work incident to the large number of special civil-service examinations given to fill positions created by the passage of the food and drug law. The chief of the division has also assisted in selecting and training the food and drug inspectors newly appointed.

Bulletin No. 104 of this Bureau, on the "Food Legislation during the Year ended June 30, 1906," was prepared by this division.

FOOD INVESTIGATIONS BY SPECIAL AGENTS.

An important investigation of canneries and their products, with special reference to the causes of spoilage and the use of preservatives, was conducted, laboratory experiments in the preparation of such products, including catsups, without any artificial preservative having been made with a marked degree of success. The studies in spoilage are being made along the lines suggested by factory practice in the treating and processing of canned goods. These are bacteriological in character and consist in determining the conditions most favorable to the development of the germs, the thermal death-point, the character of the spoilage produced, and the products formed, such as gases,

enzyms, etc. The sanitation of the canneries is also considered in the factory inspection and has proved to be a most important point in the enforcement of the food law.

Plans were made to extend the investigations in enological technology, and the equipping of a larger laboratory was begun in January, 1907. Special investigations were made in France touching the problems under consideration, and cultures of pure yeasts of known value, isolated in the course of the experiments made in the laboratory, can now be furnished to manufacturers or farmers wishing to experiment in the production of ciders and other fermented fruit juices. The superior products thus obtained, it is believed, will provide a profitable outlet for utilizing apples and other fruits in communities where the crops are not readily marketed and much is wasted.

SUGAR LABORATORY.

The total number of samples analyzed in the Sugar Laboratory, under C. A. Browne, chief, during the fiscal year just closed was 520, as shown in the following statement. Samples analyzed outside of the Bureau of Chemistry by members of the Sugar Laboratory engaged in special investigations such as the industrial alcohol work and the sweet-corn experiments are not included in this statement.

Samples analyzed in the Sugar Laboratory, fiscal year 1907.

	No. of samples.
Cereal products (barley, malt, etc.) for cereal laboratory	127
Sugar beets	88
Honey for complete analysis (honey investigation)	112
Honey collected in execution of food law	40
Malt extracts for Drug Laboratory	26
Wines and beers for Food Laboratory	11
Sugars, molasses, etc., Association of Official Agricultural Chemists, appraiser's samples, etc	35
Miscellaneous products (potatoes, roots, cornstalks, etc.) for alcohol production	25
Dextrins, starches, and glucoses for Bureau of Engraving and Printing	22
Miscellaneous	34
Total	520

The main lines of investigation conducted in the Sugar Laboratory may be summarized as follows:

(1) Effect of environment upon the sugar content of Indian sweet corn (under the supervision of the Chief of the Bureau).

(2) Referee work upon methods of sugar analysis, Association of Official Agricultural Chemists.

(3) Study of the composition of 100 American honeys, in collaboration with the Bureau of Entomology.

(4) Investigations of various raw materials for use in alcohol production (cannery waste, cornstalks, potatoes, roots, molasses, etc.).

(5) Investigations of commercial malt and diastatic preparations.

(6) A study of the carbohydrates of the maple tree, with special reference to the action of enzyms in the transformation of the same.

The special study of the production of industrial alcohol from factory by-products, mentioned in the report for 1906, was further pursued, and additional data in regard to the alcohol procurable from such sources were obtained. This investigation has not yet reached

the point where publication would be desirable, present conditions rendering such production of alcohol unprofitable on a commercial scale.

The other special investigation mentioned, conducted under the direction of the Chief of Bureau, relating to the chemical changes taking place in sweet Indian corn in different environments, was continued. In connection with the fact previously recorded—that when pulled from the stalk and exposed to ordinary temperatures the sugar content rapidly diminishes—an interesting point developed is that cold storage during transportation and handling greatly retards the decrease in sweetness.

DAIRY LABORATORY.

During the past fiscal year the principal lines of work conducted in the Dairy Laboratory, under G. E. Patrick, chief, have been as follows:

(1) A study of the digestibility of cheddar cheese at different stages of ripeness was continued from the preceding year. This work was done in collaboration with the Bureau of Animal Industry.

(2) Analysis and other examinations of market butter and cheese for the Dairy Division, Bureau of Animal Industry.

(3) Analysis of milks and creams sold in the District of Columbia, now completed.

(4) Analysis of ice creams sold in the District of Columbia, now completed.

(5) Analysis of condensed milks of commerce.

(6) Analysis of butter and milk used at the hygienic table in the food investigations of the Bureau.

(7) Analysis of dairy products sent in from other laboratories and departments, and by the food and drug inspectors of the Bureau of Chemistry.

(8) Study of methods for the analysis of dairy products. Some of the results of this work have been published in scientific and dairy journals; others are now in preparation for publication.

The total number of samples examined during the year was 1,573, of which 552 were butter and cheese from the Dairy Division, Bureau of Animal Industry; 532 were milks and creams purchased in the District of Columbia and vicinity; 199 were ice creams purchased in the District of Columbia; 116 were milk and butter from the hygienic table, Bureau of Chemistry; 49 were condensed milks, and the remaining 125, including those used in the study of methods, were from miscellaneous sources.

MISCELLANEOUS LABORATORY.

During the past year the Miscellaneous Laboratory, under J. K. Haywood, chief, has examined about 1,200 samples. Some of these analyses were made as a part of the investigation work of the laboratory and either have been published or will be. Others were made for the various laboratories of the Bureau and for different Bureaus and Divisions of the Department and other Departments of the National Government. In addition to this experimental work, much time has been given to considering questions and answering correspondence relating to the food and drugs act in so far as it applies to water, cattle foods, and cattle and poultry remedies.

The work of the Miscellaneous Laboratory is divided into five distinct sections with a leader who is especially skilled in that particular work at the head of each. These sections are as follows: (1) Waters; (2) insecticides, fungicides, and weed killers; (3) miscellaneous; (4) cattle foods and grain investigations; (5) action of trade wastes on agricultural products, forests, and animals. Besides the above, certain investigations of hygienic character, such as determining arsenic in fabrics and wall paper, and analyzing the atmosphere of schools, churches, etc., are carried on from time to time as the other work of the laboratory permits.

WATER EXAMINATIONS.

The water section has during the past year examined 30 samples of irrigation waters, principally for the Irrigation and Drainage Investigations, Office of Experiment Stations, and has made several chemical studies of especial interest to that office. Thirty complete mineral-water analyses were made and a study was conducted to find methods for determining minute amounts of lithium in mineral waters. Most of these results will be presented in a report on American mineral waters from source and will be of great value as furnishing standards in enforcing the food and drugs act. Sixty-six sanitary examinations of water have been completed, and this section during the past year made a study of the water supply of Roanoke, Va., suggesting to that city means for abating the epidemic of typhoid fever then at its height.

INSECTICIDES AND FUNGICIDES.

This section has made examinations of 46 samples of insecticides, fungicides, and weed killers, most of this work having been done at the request of the Bureau of Entomology or Bureau of Plant Industry. A considerable amount of time also was devoted to a study of the composition of lead arsenate and the chemicals used in preparing the same as they appear on the American market. Field studies of the action of lead arsenate on foliage have also been undertaken in collaboration with the Bureau of Entomology. During the past year this section published a bulletin on The Lime-Sulphur-Salt Wash and its Substitutes, and a paper entitled "The Methods of Analysis of Lead Arsenate."

MISCELLANEOUS WORK.

The miscellaneous section has charge of all the work of a miscellaneous character coming into the Bureau of Chemistry. During the past year 72 miscellaneous examinations have been made for the Departments of the National Government and other Bureaus of the Department of Agriculture. Besides the above, various special investigations of a miscellaneous character have been made, including in round numbers the examination of 50 to 100 samples.

CATTLE FOOD AND GRAIN INVESTIGATION.

This section has examined about 800 samples. Fifty-seven of these examinations were made in the course of a study conducted in collaboration with the Office of Farm Management, Bureau of Plant Indus-

try, on forage and range crops of the arid and semiarid West; 10 were of a miscellaneous character; 187 were more or less complete analyses of malts and barleys in connection with a study of beers, and 567 were analyses of various imported and domestic cereal grains. The grain samples were collected by the Office of Grain Investigations of the Bureau of Plant Industry in the interest of a study now being carried on by that office and the Miscellaneous Laboratory regarding the relative feeding values and commercial importance of such grains, and the adaptability of foreign grains to the climatic conditions of the United States.

A large portion of the time of one member of this section, who was appointed referee on cattle foods by the Association of Official Agricultural Chemists, has been given to a study of methods of analysis and to problems which arose in connection with the food and drugs act. A report was made to the Association of Official Agricultural Chemists on these studies by the referee for 1906. A bulletin on the chemical and microscopical composition of cattle foods as they appear in the American market has been prepared. Certain grain investigations have been completed and will shortly be collated in a joint report of the Bureau of Chemistry and the Bureau of Plant Industry.

TRADE WASTES.

This section during the past year made an examination of about 104 samples. An investigation of the injury to vegetation by smelter fumes near Ducktown, Tenn., was carried on and the results will be presented later. The injury to vegetation and animal life caused by smelter wastes at New Anaconda, Mont., is being studied at present. The results of both of these investigations will not only be interesting from a scientific standpoint, but will be of great value in suits between smelters and adjoining communities. Recently this section began a study to determine what amount of sulphur dioxid was injurious to trees and farm crops, and the effect of the tailings of smelters on the land and crops irrigated by streams receiving the same. This work will be continued during the summer and spring for two or three years.

DRUG LABORATORY.

The Drug Laboratory, under L. F. Kebler, chief, was concerned during the fiscal year with the general inspection of the purity and the composition of the drugs offered on the American market and in the study of the many special problems connected therewith. The opportunity for effective work of this character was greatly increased by the council of pharmacy and chemistry of the American Medical Association, by whose activity it was made possible to obtain for examination all the new drugs offered to the medical profession.

An important question in the Drug Laboratory is that of the distinction between medicines and foods. This boundary line is extremely migratory in character, because many substances which are used for foods, either directly or for condimental purposes, are also at times prescribed by physicians for the cure, mitigation, or prevention of disease. When thus prescribed they become, to all intents and purposes, drugs, and must be judged by the drug standard. It

therefore happens that often a commodity is subject to two sets of standards—when sold and used for a food it is judged by the food standard, and when sold and used as a medicine by the drug standard. Examples of this are found in such well-known substances as brandy and olive oil. On the other hand, there are many drugs which owe their therapeutic value almost solely to their nutritive properties, but these drugs are rarely sold as foods chiefly because of their unpalatable qualities. One of the most important drugs of this kind is cod-liver oil. The policy of the Drug Laboratory is to regard as drugs all ordinary food substances of mineral, plant, or animal origin which are recognized by the medical faculty as having valuable curative properties whenever specifically used for drug purposes. While it is not always easy to determine to which category the substance belongs, it can usually be done either by the inspection of the label or by studying the trade conditions.

During the last six months of the fiscal year much time was spent in preparation for the new work incident to the enforcement of the food and drugs act, and both the personnel and the equipment of the Drug Laboratory were greatly increased.

ANALYTICAL WORK—SAMPLES EXAMINED.

During the fiscal year ending June 30, 1907, there were examined in the Drug Laboratory 600 samples; of this number 307 were chemical reagents, 70 were samples of hops to be tested for arsenic, and the remainder were drugs of various kinds.

CHEMICAL REAGENTS.—The chemicals examined were those regularly employed in chemical analysis in the Bureau of Chemistry and the branch laboratories under its supervision.

HOPS.—The samples of hops were examined at the request of the Bureau of Plant Industry and a number of exporters for the purpose of ascertaining to what extent they are contaminated with arsenic, and whether such contamination is sufficient to preclude their being exported to England. The object was chiefly to ascertain from what source the arsenic was obtained.

GLYCERIN.—Fifteen samples of glycerin were examined for the purpose of ascertaining to what extent the article as supplied on the market is contaminated with arsenic and other impurities; also for the purpose of determining whether or not the tests prescribed by the United States Pharmacopœia, eighth revision, are too rigid. It was found that very few samples could be secured which would fully comply with the standard.

COD-LIVER OIL.—This is a continuation of the work begun about two years ago for the purpose of ascertaining the status of American cod-liver oil in comparison with the Norwegian product, also the difference between the two from a chemical point of view. A number of samples were reexamined for the purpose of determining to what extent they are influenced by standing. The total number of oils examined was 68.

SULPHUR.—Three samples of this chemical were tested for the Bureau of Plant Industry, for the purpose of ascertaining whether they

contained appreciable quantities of arsenic. These samples were employed for bleaching hops.

POST-OFFICE SAMPLES.—Thirteen samples of various drugs sent through the mails were examined, at the request of the Post-Office Department, for the purpose of giving information relative to their composition and also to determine whether or not the claims made for the same are warranted.

OFFICIAL INTERSTATE SAMPLES.—Seven samples of drug products taken officially by inspectors were examined.

SAMPLES FROM COUNCIL OF PHARMACY AND CHEMISTRY.—The secretary of the council has submitted during the past fiscal year 42 samples of drugs for examination, the results of which have been published by the council in the Journal of the American Medical Association.

MISCELLANEOUS.—Under this heading are placed all drugs of which from one to three samples have been examined. These examinations include such products as headache powders, soluble iodin, soluble sulphur, kidney cures, tablets, etc.

METHODS.

Considerable work has been done on analytical methods for the assaying of drug products. Almost all of the methods in the U. S. Pharmacopœia were tried and compared with other methods.

Various methods were tested for determining alcohol in medicinal agents containing resins, oils, oleoresins, and similar products, which make the accurate determination difficult. The refractometer was called into use, but thus far has not been satisfactory, except when distillation was first employed.

Various methods for making complete analyses of the different headache remedies of both known and unknown composition have been studied.

Considerable work has also been done on methods for detecting the various enzyms present in medicinal agents and for ascertaining to what extent these enzyms render the different substances available to the human system, as is claimed for them.

CONTRACTS LABORATORY.

During the fiscal year ending June 30, 1907, the Contracts Laboratory, under P. H. Walker, chief, examined 870 samples. A very large part of the work of the laboratory has been done for other Departments of the Government, as the following statement will show:

War Department	20
Navy Department	6
Interior Department	64
Post-Office Department	84
Treasury Department (principally for Bureau of Engraving and Printing)	387
Department of Commerce and Labor	7
Department of Agriculture	39
Government Printing Office	17

The samples analyzed were quite varied in character, including pigments, oils, glue, glycerin, ink, inking pads, soap, disinfectants, steel, alloys, paints, varnishes, linoleum, and numerous other substances. An important part of the work during this year has been the examination of the supplies for the Bureau of Engraving and Printing. In the past some work has been done for that bureau, but during this fiscal year practically all of the examinations in connection with the letting of contracts were made in this laboratory.

During the year some studies were completed on the determination of the saponification number of lubricating oils containing saponifiable fats, on the unification of reducing sugar methods, and on the determination of zinc present as carbonate and as silicate in ores. Investigations made under the direction of the Chief of the Bureau on synthetic alcohol and phenacetin are almost completed.

The investigations on typewriter ribbons and carbon papers have been continued during part of the year, but, owing to the transfer of the chemist in charge of this work to another laboratory, the results have not as yet been formulated. Quite a large amount of work has also been done in the study of paints and paint materials. Much more work of a routine character has been necessary in examining the supplies bought by the Bureau than has been the case in the past, owing largely to the increased amount of material purchased.

PLANT ANALYSIS LABORATORY.

In the Plant Analysis Laboratory, under C. C. Moore, chief, during the past fiscal year, the results of investigations relating to the poisonous properties of cassava, as outlined in the year previous, have been submitted for publication as Bulletin No. 106 of the Bureau of Chemistry.

An investigation was begun to determine the source from which alcohol, for industrial purposes, could be most economically obtained. To this end, a study of cassava was made. This plant has never been utilized in the production of alcohol, and owing to the demand in the South for a source of industrial alcohol, which would enable that section of the country to supply its own needs and even compete with the corn-producing West, plans were inaugurated to make a full investigation. A detailed study of the technical processes used in the manufacture of alcohol from substances related in general composition to this plant was made. In conjunction with laboratory tests, plans were laid to conduct the experiment upon a commercial scale. When, however, investigations in other Bureaus of the Department showed that the experiments relating to cassava culture in the Southern States were incomplete, the work in the Plant Analysis Laboratory was discontinued pending the settlement of cultural problems.

Attention was then devoted to the sweet potato, with particular reference to the utilization, in the production of alcohol, of the great quantities of potatoes that during storage become unmarketable as vegetables. As this plant is adapted to the soil and climate of the Southern States it could be produced in even greater quantities were there a profitable market. A compilation was made bearing on the present production, utilization, methods of storage, and the possibility of this source of industrial alcohol competing with others. This investigation forecasts the possibility that the sweet potato may be-

come of importance in other respects than as a food, should the use of industrial alcohol become extensive.

This laboratory has also collected a large amount of data in the investigation of inorganic plant constituents as affected by climatic environment, conducted in collaboration with various experiment stations. The submission of this material was followed by a detailed review of the work done on kindred lines, the preparation of which occupied several months.

It is proposed, because of the overlapping of these lines of work, to abolish the Laboratory of Plant Analysis at the end of the fiscal year, the chief of the laboratory to conduct his researches in connection with the section of vegetable physiological chemistry recently organized.

LEATHER AND PAPER LABORATORY.

The number and character of samples received in the Leather and Paper Laboratory, under F. P. Veitch, chief, during the year are given in the following statement:

Paper	962
Tanning materials and leather	190
Turpentines and woods	89
Miscellaneous	47
Total	1,288

TANNING MATERIAL.

An investigation of American sumacs for the purpose of determining the tannin content of sumacs from different localities, the most favorable time to gather them, and the best method of curing was begun during the year and is still in progress. Data were also collected as to occurrence, yield per acre, and uses of the native wild sumac. This plant, which is very plentiful in certain sections, may be gathered profitably at the present price of sumac and may replace Sicilian sumac in many cases. As it has been claimed that the Sicilian sumac imported now is much less adulterated than when the samples were first collected, more recent importations were sampled and are now being examined.

LEATHER.

An extended examination of sole leather was begun and is still in progress for the purpose of determining the extent to which it is adulterated and the factors which determine the quality of such leather. Examinations of a number of bookbinding leathers have also been made.

PAPERS.

The investigations on book and envelope papers with particular reference to the needs of the public service have been continued and the results are now being prepared for publication. A very large number of papers, envelopes, postal cards, stamped envelopes, wrapping papers, etc., have been examined during the year. The Public Printer accepts no deliveries of paper until reported on by this laboratory, and the amount of work from this source alone is exceedingly

great, requiring during the last fiscal year much of the time of the entire laboratory force. For this reason some of the research work that would otherwise have been completed must be continued in 1907–8. An examination of photographic printing papers was begun but is not yet completed.

WOOD TURPENTINE.

The work on wood turpentines and the production of turpentine has been continued, and a large number of samples have been analyzed and practical tests made with various samples to determine their value as varnish and paint thinners.

DESTRUCTIVE DISTILLATION OF WOOD.

In the prosecution of the work along this line a number of complete sets of products, the samples of which were taken at regular intervals during distillation, have been examined for the purpose of determining the nature and quantity of the products at various periods during production. The data thus obtained should be useful in suggesting improvements in the conduct of the chemical processes of this industry. Circular No. 36, entitled "Chemical Methods for Utilizing Wood," was issued to meet the general demand for such information.

MISCELLANEOUS WORK.

A number of fertilizers and other miscellaneous materials have been referred to the laboratory from other Bureaus and Departments. The work of the Association of Official Agricultural Chemists and of the American Leather Chemists on tanning materials and fertilizers has been participated in and considerable time has been given to the improvement of methods of analysis.

MICROCHEMICAL LABORATORY.

The work in the Microchemical Laboratory, under B. J. Howard, chief, for the past year has been very largely in collaboration with the other laboratories of the Bureau of Chemistry and about 3,000 samples were examined.

In collaboration with the Division of Foods, 114 samples of imported foods have been examined and 55 miscellaneous food samples. Toward the last of the year work was begun upon samples taken in connection with the enforcement of the food and drugs act. In connection with the Leather and Paper Laboratory, 608 samples were examined, the most of these being papers and paper materials. An investigation was made at the request of the Bureau of Plant Industry on photographic developing papers. The examinations of book papers have been continued. The work on imported sumacs has been nearly completed and the report upon them partially prepared. Other Departments of the Government have availed themselves of the services of this laboratory to a greater extent than ever before.

A few medicines have been examined in collaboration with the Drug Laboratory to determine, as far as possible, from their structural and microchemical characteristics, the ingredients present.

The work begun in the previous year upon barley and malts has been continued, 143 samples having been examined. Toward the last of the year a new set of samples, the product of another season's crop, was received; but the examination of these samples has not yet been made.

At the request of the Contracts Laboratory, 142 samples have been examined. These included pigments (used in paints and inks), dextrins, scouring powders, gum tragacanth, and linoleums. Twine, millinet, and khaki cloth were examined as to their fiber.

For the Sugar Laboratory 187 samples have been examined, consisting mainly of honeys and a few starches and dextrins. The work upon the honeys was done to determine the kinds of pollen present in them and to develop the microscopic method in the detection of adulteration.

Aside from work conducted in collaboration with the laboratories of the Bureau of Chemistry 132 samples of spices, including peppers, allspice, mustard, cloves, ginger, red pepper, cinnamon, and mace were examined for the Maine Experiment Station. In addition there have been examined a considerable number of miscellaneous samples and specimens in connection with research work and the development of methods. One hundred and twenty-five negatives were made during the year, most of them being photomicrographs.

A study was also made of 190 samples of sago and tapioca products to determine the nature of the starches commonly present.

Leucocyte counts were made upon 500 milk and cream samples in connection with a study of the local milk supply made by the Bureau of Chemistry.

The blood tests and microscopic examination of the urine sediments from the subjects on the hygienic table were made by this laboratory, requiring in all the making of 340 blood tests and 95 urine tests, necessitating over 1,000 separate examinations.

The manuscript for the report upon the microscopic examination of stock foods has been prepared for publication as well as the microscopic study of honey pollens.

SPECIAL INVESTIGATIONS.

ANIMAL PHYSIOLOGICAL INVESTIGATIONS.

This laboratory, in charge of F. C. Weber, was organized on April 1, 1907, for the special conduct of the hygienic table and the performance of all analytical work connected with the experiments performed to determine the influence of preservatives and artificial colors on digestion and health, and to conduct allied investigations on animal physiological chemistry. The work of this section from its organization to the end of the fiscal year may be summarized as follows:

(1) Conduct of the hygienic table for the administration of potassium nitrate, the calculation and tabulation of results, and the collection of 640 samples of feces and of urine, and complete analysis of 128 urine samples.

(2) Complete analysis of 12 cold-storage chickens.

(3) Complete analysis of 11 cold-storage egg samples.

(4) Examination of 30 meat extracts.

The results of the experimental work with sulphurous acid and sulphates were compiled and prepared for publication, as were also the data obtained in the investigation of meat extracts, both commercial samples and those prepared in the laboratory having been studied.

The chemist in charge also conducted the cooperative work on moisture in foods as referee in the Association of Official Agricultural Chemists.

VEGETABLE PHYSIOLOGICAL INVESTIGATIONS.

This laboratory, in charge of J. A. Le Clerc, works in collaboration with the Bureau of Plant Industry along the following lines:

(1) The improvement of wheats grown in this country.

(2) The effect of variation in climatic conditions on newly introduced varieties of grain.

(3) The chemical changes in composition which wheats undergo when grown in different localities.

(*a*) The chemical changes in composition which go on during the different stages of growth.

(*b*) The influence of excessive moisture during the growing period and the study of its results.

(*c*) The chemical changes which take place in wheat after grinding when allowed to age in the laboratory.

During the past year this laboratory has made 3,827 determinations, almost all of which were in duplicate, making a total of about 7,000 determinations actually performed. The most important among these were the following:

Determinations of phosphoric acid	550
Determinations of ash	550
Determinations of weight per bushel	700
Determinations of sugar in wheat	232
Determinations of weight per 1,000 kernels	600
Determinations of moisture	355

The other determinations were of lecithins, fiber, fat, sulphur, total nitrogen, albuminoid nitrogen, soluble nitrogen, pentosans, and physical appearance. Research work was conducted in regard to the following points:

(1) The loss of phosphoric acid during the ashing of a sample.

(2) The best method for determining sugars in wheat.

(3) To improve the method and apparatus for the determination of lecithins as lecithans.

BACTERIOLOGICAL-CHEMICAL INVESTIGATIONS.

WASHINGTON LABORATORY.—The work of the year, in charge of G. W. Stiles, jr., consisted of the partial identification of about 400 different organisms isolated from various sources; the testing of the germicidal or antiseptic value of a number of chemical substances; the regular bacteriological investigations of cold-storage fowl, quail, and eggs; a study of the organisms found in condensed and evaporated milk; bacteriological examinations of samples of water from various sources (wells, springs, bottled mineral waters, and the city hydrant water), and water before and after filtering by the system in the Bureau of Chemistry. A thorough study was made of milk,

cream, and ice cream as found in the local market (Washington, D. C.).

A new and very important line of activity has already been begun in collaboration with the Drug Laboratory in making a critical examination of the sterility of the various dressings, bandages, pads, ligatures, gauzes, etc., used in surgery. In this connection a brief inspection was made of a few factories preparing this class of goods.

A few tours of inspection were also made to local dairy farms and their sanitary condition was tested by plate cultures prepared upon the premises from milk, water, etc. Many of the cafés, hotels, lunch counters, milk depots, and ice-cream factories have been inspected with reference to the sanitary conditions of their refrigerators, ice boxes, kitchens, etc., and their methods of handling and caring for food products. A summary of the examinations made is as follows:

Agar plates containing various organisms for identification	39
Condensed and evaporated milk	111
Cream	139
Disinfectants, germicidal value of	25
Eggs, cold storage	8
Fowl:	
Cold storage, drawn	3
Cold storage, undrawn	3
Fresh	3
Ice cream	206
Milk	388
Miscellaneous	22
Quail:	
Cold storage, drawn	2
Cold storage, undrawn	2
Fresh	2
Surgical dressings, ligatures, etc	6
Waters, mineral and other	60
Total	1,029

PHILADELPHIA FOOD-RESEARCH LABORATORY.—The food-research laboratory, in charge of M. E. Pennington, was not formally established until April, 1907. Previous to that time the facilities offered by a private laboratory were used by the chemists employed for these researches in the study of certain chemical, histological, and bacteriological changes which take place in food products, more especially when stored at low temperatures. The problems which received the most attention are the rate of growth of bacteria in milk kept near its freezing point; the species of organisms which thrive under such conditions, and the chemical changes which the milk undergoes when so preserved; also whether the latter changes are to be ascribed to the action of bacteria or to the action of naturally occurring enzyms or to the combined action of both. The chemical study has dealt chiefly with the changes in the proteid constituents.

The study of the histological changes occurring in animal tissues which have been kept in cold storage for varying periods of time has been undertaken and promises to be a most important and profitable source of information for the tracing of the more obscure alterations in flesh preserved by cold.

The behavior of condensed milk and evaporated cream as culture media for organisms, particularly those usually concerned in the intestinal diseases of young children, has been investigated as part of a study to determine, if possible, whether the very high death rate of infants fed on such milks is to be ascribed to its chemical composition, which differs widely from the composition of their natural food, or whether the reason lies in some less obvious change due to the method of its preparation or added constituents.

CLERICAL WORK.

The clerical work of this Bureau was greatly increased during the fiscal year ended June 30, 1907, by the food and drugs act. The amount of work performed is summarized as follows:

Approximate number of letters written	67,800
Requisitions	1,669
Accounts audited	3,870
Serial numbers recorded and issued in connection with the food and drugs act	12,700

In addition to the above, various card catalogues and records were kept of permanent property, fiscal transactions, letter files, chemical analyses, costs, the receipt and distribution of supplies, and miscellaneous matters.

The work of the property clerk was greatly increased during the year. Contracts were made for supplies and equipment for ten new food and drug inspection laboratories located throughout the country. The laboratory at San Francisco, having been completely destroyed by the earthquake and fire, had to be again equipped. In addition, work in the other five branch laboratories already established and at the Washington office was tremendously increased, necessitating a corresponding increase in the amount of supplies. The food research laboratory in Philadelphia was enlarged and a new equipment supplied at Blacksburg for enological investigations. The preparation of specifications, securing bids, and drawing and awarding contracts for the above supplies involved an immense amount of clerical work. A complete record showing the distribution of all items purchased was kept and a cost system was devised and installed.

There is urgent need for more storeroom. The present cramped quarters necessitate ordering at frequent intervals small quantities of much used supplies, which could be more advantageously purchased in large lots. This is particularly true of chemical apparatus, a large part of which is imported and requires from eight to twelve weeks for delivery.

The work involved in keeping the accounts of the Bureau was also materially increased. The examination and verification of vouchers, including traveling accounts of inspectors, formed a notable addition to this work.

PUBLICATIONS.

The following statement shows the new publications issued—bulletins, circulars, and miscellaneous pamphlets—together with the reprints and orders for job printing. The decrease in reprints is due to the effect of General Order No. 96, restricting the free distribution of publications.

NEW PUBLICATIONS.

Bulletins.—No. 84, Influence of Food Preservatives and Artificial Colors on Digestion and Health. Part II, Salicylic Acid and Salicylates, 280 pages; No. 101, The Lime-Sulphur-Salt Wash and its Substitutes, 29 pages; No. 102, Foreign Trade Practices in the Manufacture and Exportation of Alcoholic Beverages and Canned Goods—Summary of an investigation made in Great Britain and Ireland, Germany, and France, 45 pages; No. 103, Experimental Work in

the production of Table Sirup at Waycross, Ga., 1905, together with a Summary of the Four-Year Experiment on Fertilization of Sugar Cane, 38 pages; No. 104, Food Legislation during the Year ended June 30, 1906, 53 pages; No. 105, Proceedings of the Twenty-Third Annual Convention of the Association of Official Agricultural Chemists, held at Washington, D. C., November 14–16, 1906, 213 pages; No. 106, Cassava: Its Content of Hydrocyanic Acid, Starch, and other Properties, 28 pages.

Farmers' Bulletins.—No 268, Industrial Alcohol: Sources and Manufacture, 47 pages; No. 269, Industrial Alcohol: Uses and Statistics, 32 pages; total of bulletins, 765 pages.

Circulars.—No. 19 (in the series of the Secretary's Office), Standards of Purity for Food Products, 19 pages; No. 21 (of the Secretary's Office), Food Regulations, 20 pages; No. 31, General Results of the Investigations showing the Effect of Salicylic Acid and Salicylates upon Digestion and Health, 12 pages; No. 32, Extracts from the Proceedings of the Association of Official Agricultural Chemists, 1906, 14 pages; No. 33, Report on Methods of Beer Analysis, 16 pages; No. 34, Examination of Papers, 10 pages; No. 35, Report on Colors, 51 pages; No. 36, Chemical Methods for Utilizing Wood, including Destructive Distillation, Recovery of Turpentine, Rosin, and Pulp, and the Preparation of Alcohols and Oxalic Acid, 54 pages; total of circulars, 206 pages.

Food Inspection Decisions.—Nos. 40 to 73, 60 pages.

Articles in 1906 Yearbook.—The Preparation of Unfermented Apple Juice, 8 pages; The Effect of Climatic Conditions on the Composition of Durum Wheat, 16 pages.

Unnumbered Circulars.—Hearings before Commission on Pure Food and Drug Regulations, 4 pages; Tentative Food Standards, 7 pages.

Report.—Report of the Chemist for 1906, 29 pages.

Total number of pages of original matter prepared for publication, 1,095 pages.

PUBLICATIONS REPRINTED.

Bulletins.—No. 46, Methods of Analysis.

Circulars.—No. 12 (Revised), Methods for the Investigation of Canceling Inks and Other Stamping Inks; No. 25, Coloring Matters for Foodstuffs and Methods for their Detection (reprinted twice); No. 28, Provisional Methods for the Determination of Food Preservatives (reprinted three times); No. 29, Changes in Provisional Methods for the Analysis of Foods and Additions Thereto (three times); No. 31, Salicylic Acid (twice); No. 32, Extracts from the Proceedings of the Association of Official Agricultural Chemists, 1906.

Food Inspection Decisions.—Nos. 40 to 43 (three times); Nos. 44 to 48 (twice); No. 46 (Revised); No. 73.

Miscellaneous.—Table Sirups (Yearbook, 1905); Formaldehyde, Its Composition and Uses (Yearbook, 1905); Report on Fats and Oils, from Bulletin 105; Determination of Water in Foods, from Bulletin 105; Report of the Chemist, 1906.

The total number of pages in the publications reprinted was 480.

The total number of requisitions for job printing issued was 337.

WORK OUTLINED FOR THE FISCAL YEAR ENDING JUNE 30, 1908.

DIVISION OF FOODS.

The following investigations will be conducted by the Division of Foods, some of which are in continuation of previous work:

(1) Study of the composition of fruit, the changes which take place during ripening, and the effect of different methods of storage.

(2) Investigation of quantitative methods for the determination of preservatives.

(3) Testing of methods for the detection of artificial coating of rice.

(4) A thorough and systematic study of the forms of adulteration of flavoring extracts and methods for the detection of such adulterations.

(5) Investigation of the chemical changes which take place during the fermentation of different classes of vinegar.

(6) Study of methods for detecting coloring and facing materials in tea.

(7) Investigation of the processes of bleaching flour and methods for detecting the nature and quantity of the bleach used.

(8) Study of methods employed in drying fruit, with special reference to the use of sulphur dioxid.

The work for the year ending June 30, 1909, will depend largely upon the success which attends the investigations of the present year. There are many questions yet unsolved in connection with the composition of foods and their adulteration. Some attention may be given to the problems of fermentation and to the analyses of the finished products. The study of so-called "infants' and invalids' foods" should be undertaken in the near future. The nature and extent of the increase in the food work and the miscellaneous activities of the division are difficult to forecast at this time, the developments in the enforcement of the law being of necessity largely a matter of conjecture.

WASHINGTON FOOD INSPECTION LABORATORY.

The Food Inspection Laboratory, under L. M. Tolman, chief, was organized July 1, 1907, for the purpose of segregating certain activities previously carried on under the direct supervision of the Chief of the Division of Foods. This change in organization was rendered necessary by the great increase in volume and importance of this work incident to the establishment of ten additional inspection laboratories and the enforcement of the food law.

The special object for which the laboratory was established is to check the work of the other sixteen food inspection laboratories and examine food inspection samples collected in the Washington district. The following lines of work will also be pursued:

(1) Checking of the methods employed in the various laboratories so as to bring about uniformity in results and procedure of analysis as well as in statement of results.

(2) Investigation of the limitations of the various methods employed in the inspection work.

(3) Investigation of the composition of the fusel oil in whisky and spirits, both new and matured.

OFFICE OF THE CHIEF FOOD AND DRUG INSPECTOR.

The rigorous enforcement of the Federal food law will be greatly facilitated by the cooperation of the several States, and to this end inspectors have been instructed to establish cordial relations with the State food officials.

The work of the inspectors as outlined for the fiscal year ending June 30, 1908, consists principally in the collection of samples for analysis, the inspection of factories, and a careful investigation of the distribution of articles of food and drugs with a view to ascertaining the chief sources of supply and the channels of commerce through which they pass.

Supplying the 16 food and drug inspection laboratories with samples for analysis will constitute the principal work of the inspectors.

The articles which it is proposed to examine especially at this time include, under "Foods," gluten flour, honey, detannated coffee, ground white and black peppers, and flavoring extracts; and under "Drugs," all cocaine preparations and advertised cures, besides the inspection of wells and the collection of samples of mineral waters. Meanwhile attention will also be directed to specific cases in which the use of illegal labels on food and drug samples is charged, for the purpose of instituting prosecutions. At the request of the Navy Department frequent inspections will be made of the food supplies purchased for the Navy.

Several large cities have been endeavoring to eliminate impure milk from their markets. The attention of the Department has been called to the fact that the State and city food officials are powerless to prevent the wholesale shipment of impure milk from one State to another. Especial attention will be given to this problem in order to remedy the evil due to such interstate shipments and a campaign of this nature will require the presence of several inspectors in each city.

In collaboration with the investigation under way in the laboratories of the effect of bleaching upon the food value of flour, a thorough inspection of the mills and of milling processes will be made. The investigation in progress in the Division of Foods to determine the effect of sulphur fumes on dried fruit will also require the work of inspectors in collaboration with the chemists.

In addition to a general inspection of wines, evidence as to the use of denatured alcohol and commercial acetic acid by vinegar and cider factories will be collected. In general, studies will be made of the methods employed in the preparation of raw materials in those food factories which use preservatives.

The work outlined above will be expanded from time to time as problems arise which require special inspectors to determine the physical conditions connected with any given phase of adulteration.

The extension of the inspection work, consisting in the detection of import, export, and interstate shipments of adulterated foods and the consequent collection of samples for examination, depends largely upon the number and working capacity of the inspection laboratories. There are 33 inspectors employed at present, and the complete equipment of the 10 new laboratories now being installed will require the increase of this number to at least 50 within the fiscal year ending June 30, 1908.

FOOD AND DRUG INSPECTION LABORATORIES.

The work of the inspection laboratories will continue along the lines indicated by the report for 1907, but the 10 additional laboratories now in the course of construction will be completely installed, and arrangements are being made for establishing 4 more, making a total of 20 port laboratories. Of these the one located at St. Paul will begin actual work during the month of December, 1907. During the early part of 1908 work will be begun in the Buffalo and Detroit laboratories, and at a later date those located at Kansas City, Galveston, Cincinnati, Savannah, Denver, Seattle, and Portland will be completed.

The laboratories located at New York, Boston, Philadelphia, New Orleans, and San Francisco are largely occupied with the examination of imported foods and drugs, although they also give considerable attention to interstate products. The other branch laboratories devote the greater part of their attention to interstate work. All of the branch laboratories are located at ports of entry, however, and in addition to the importations at those ports arrangements are in progress for the inspection of importations at minor ports, the samples to be sent to the nearest branch laboratory for examination.

SUGAR LABORATORY.

The work planned for the Sugar Laboratory for the year ending June 30, 1908, is in many instances a continuation of the investigations of the preceding year, and may be outlined as follows:

(1) Continuation of the studies regarding the effect of environment upon the sugar content of Indian sweet corn.

(2) Completion of the research on American honeys. The analytical part of this work is practically completed, and the work is now being compiled for publication.

(3) A study of the effect of environment and processes of manufacture upon the composition of beet molasses. Samples of beet molasses have been procured from all the leading beet-sugar factories of this country, and the work of analysis is now being carried out. To determine absolutely the effect of clarifying agents upon the composition of the resultant molasses, plans are being made for conducting cooperative experiments at one of the large beet-sugar factories during the coming season.

(4) A continuation of the work upon malt and diastatic preparations (malted foods, medicinal preparations, extracts, sirups, brewing sugars, etc.). This work, which during the past year was partly carried on in collaboration with the Drug Laboratory, will be extended so as to include a large variety of commercial products.

(5) A continuation of the work upon the carbohydrates of the maple and the possible action of enzyms in the transformation of the same. This research, initiated by the Chief of the Bureau, has been only partially completed; it is proposed to continue the work the coming winter and spring, collaborating with the Vermont Experiment Station, which is working along somewhat similar lines.

(6) A continuation of the work upon chemical methods employed in the analysis of sugars and carbohydrates. This is primarily referee work for the Association of Official Agricultural Chemists, and includes a study of methods used for the examination of honeys, sugars, molasses, dextrins, malt products, etc.

The work of the fiscal year ending June 30, 1909, will be a continuation of the above plans in so far as these have remained uncompleted, with such new projects as may have, in the meantime, suggested themselves.

DAIRY LABORATORY.

The following lines of work will be pursued in the Dairy Laboratory:

(1) Analysis of all the brands of condensed milk sold in the United States.

(2) Analysis of all the brands of milk powders or dried milks sold in the United States.

(3) A study of the changes occurring in the proteids of milk kept in cold storage and by the use of various preservatives.

(4) A continuation of the study methods of analysis of dairy products. The greatest need exists for methods of detecting adulteration of butter with other animal fats.

(5) Analytical work in the enforcement of the food and drugs act and the renovated-butter law.

(6) Work for other laboratories and departments as heretofore.

The work for the ensuing fiscal year will be along the same lines.

MISCELLANEOUS LABORATORY.

During the year ending June 30, 1908, the following investigations will be continued by the Miscellaneous Laboratory:

(1) Examination of irrigation waters for the Office of Irrigation and Drainage Investigations.

(2) Study of the composition of American mineral waters from source and as they appear in the market, in order that those provisions of the food and drugs act relating to waters may be enforced. The work is now being carried on entirely by the Bureau of Chemistry instead of in collaboration with the U. S. Geological Survey, as formerly.

(3) Water analyses will be made and the water supplies of towns will be examined when epidemics, such as typhoid, render it advisable and the town has no official chemist.

(4) Work on a spectroscopic method for determining minute amounts of lithium.

(5) Work on insecticides and fungicides for the Bureau of Entomology and other Bureaus desiring such collaboration; a study of samples of lead arsenate as they appear on the American market and the ingredients used in preparing the same, as well as field studies of the action of lead arsenate on foliage and the cause of scorching by the same.

(6) Miscellaneous investigations for other laboratories, Divisions, Bureaus, and Departments of the National Government.

(7) Study of the composition of American cattle foods as they appear in the American market, especially as it relates to the enforcement of the food and drugs act.

(8) Studies of forage and range crops of the arid and semiarid West in collaboration with the Office of Farm Management of the Bureau of Plant Industry, as well as on malts and barleys.

(9) Studies of the feeding value, commercial importance, and adaptability of grains in collaboration with the Office of Grain Investigations of the Bureau of Plant Industry.

(10) Studies of the effect of trade wastes on vegetation and animals and the investigation of the effect of sulphur dioxid on forest trees and of the constituents of the dump heap from copper smelters on various farm crops. In connection with this study an investigation will also be made of the amount of toxic elements absorbed by the various crops irrigated by water containing toxic elements.

It is hoped that a study of methods for determining the various constituents of common disinfectants and a method for judging the practical value of such compounds can be undertaken.

Studies of the chemical composition and characteristics of various imported and domestic varieties of rice and the adaptability of foreign rices to climatic conditions in the United States will be undertaken in collaboration with the Office of Grain Investigations, Bureau of Plant Industry.

If time allows, hygienic studies of the amount of arsenic in colored candies and in beers, and the condition of the atmosphere of schools, Government buildings, tenements, etc., will be undertaken.

The lines of work mentioned for the year ending June 30, 1908, will probably be continued in the following year. The work on waters and cattle foods in connection with the food and drugs act will be greatly increased, so that it will doubtless be necessary to more than double the force of these two sections. The insecticide and fungicide investigations are increasing to such an extent that it will be necessary to employ at least one more chemist on the work in a short time. The investigations of the action of trade wastes in agriculture are so constantly called for by the Department of Justice that it is even now necessary to employ an additional chemist on the work.

DRUG LABORATORY.

The work of the Drug Laboratory outlined for the preceding year will be continued, but greatly extended in its application to the enforcement of the food and drugs act. Analytical methods must be elaborated for the determination of the various constituents required by the law to be declared upon the labels of drugs and medical mixtures—such, for example, as the detection of morphine in fluid substances containing glycerin. Such allied researches will accompany the examination of official drug samples collected by the inspectors, it being the intention to follow up closely all adulterations and misrepresentations of drugs, both of domestic and foreign origin.

These investigations, the enforcement of the law, and continued cooperation with other Bureaus and other Departments of the Government will require a greatly increased force and equipment in 1909.

CONTRACTS LABORATORY.

The work of the Contracts Laboratory for the fiscal year ending June 30, 1908, will be along the same lines as that of the year preceding. Special attention will be devoted to the study of paints and paint materials, which will probably be continued for several years. It will be necessary to conduct some service tests, and therefore a practical expert painter should be secured, and a fund be available for making such experiments. Owing to the great variety of substances examined by this laboratory and the necessity of making exact specifications, compliance with which can be exacted, it is desirable that a set of methods useful in this kind of work be collected. Some work has already been done in this direction, and it is proposed, as soon as possible, to issue a compilation of such methods as a bulletin.

LEATHER AND PAPER LABORATORY.

The following investigations and studies are planned for the Leather and Paper Laboratory:

(1) Continuation of the study of tanning materials with reference to the utilization of such products as grow quickly, or which have been hitherto but little used, with a view to supplementing the rapidly decreasing supply of tanning materials.

(2) Study and valuation of degras, or wool grease, and of various methods for the detection of its adulterants.

(3) Physical and chemical properties of various leathers.

(4) Principles of rapid tanning.

(5) Continuation of the study of papers for various uses, and the preparation of standard specifications for such papers.

(6) Investigation as to a new raw material for pulp and paper making.

(7) Continuation of the work on the production and industrial application of wood turpentine.

(8) Study of the adulteration of turpentine.

(9) Continuation of the work on the destructive distillation of woods, with particular reference to increasing the yields of products.

This laboratory will also cooperate, so far as the facilities will permit, with other Bureaus and Divisions of this and other Departments in work which comes within its province.

MICROCHEMICAL LABORATORY.

The work on the methods of microscopical analysis of foods, papers, sumacs, drugs, and similar substances whose character can be shown by such tests will be continued. The enforcement of the food and drugs act will require many microscopical examinations of samples and the biological analyses of barleys and malts will again be made.

It is hoped that an increase in the force will enable the laboratory to finish the studies on book papers, sumacs, and honeys which at present are in various stages of completion.

Several lines of investigation which have been brought into prominence by the new food law will be given more attention, bearing on the identification of adulterants in foods and drugs.

SPECIAL INVESTIGATIONS.

ANIMAL PHYSIOLOGICAL INVESTIGATIONS.

The work for the current year will include:

(1) Continuation of the hygienic table to complete the experiment on potassium nitrate and test other preservatives and coloring matters.

(2) Studies on the determination of purin bodies in American foodstuffs.

(3) Extraction of toxins from foodstuffs in various states of putrefaction and the effect of these toxins when injected into animals.

(4) Such experiments in animal feeding as may be required in connection with preservative work of the hygienic table.

(5) Continuation of work on meat extracts and cold-storage products.

(6) Study of methods: (*a*) for the separation of nitrogenous bodies; (*b*) Association of Official Agricultural Chemists' work on moisture; (*c*) Association of Official Agricultural Chemists' work on meat extracts.

(7) Compiling the data for the preservative reports and interpreting the results.

(8) Experiments with small animals to determine the influence of preservatives on digestion and the study of special problems which may arise in this connection.

VEGETABLE PHYSIOLOGICAL INVESTIGATIONS.

The work reported specifically in the last report and outlined as follows will be continued during the current year:

(1) Study of the deterioration of wheat or the production of white spots, thus making the grain less glutenous. This study is being carried on in greenhouse pot experiments as well as in the field at the Colorado station.

(2) Influence of fertilizers, especially phosphate salts on the gluten content of wheat, conducted in collaboration with the Tennessee Experiment Station.

(3) Influence of a preceding legume crop on the gluten content of wheat, in collaboration with the California station at Modesto.

(4) So-called "triangular experiments" as outlined in the previous report.

(5) Continuation of the study of barleys and malts and compilation of data previously obtained.

(6) Experiments on the date of planting and rate of seeding, conducted in collaboration with the stations in Tennessee, Kansas, and Nebraska.

(7) Continuation of work on Swedish Select oats in collaboration with the Bureau of Plant Industry. This investigation involves a study of the feeding value of a large number of samples, mainly of introduced varieties.

In 1908–9 it is planned to inaugurate a study of the effect of sunlight and different colored lights on the chemical composition of the grain during the growing period, in addition to the continuance of the experiments already under way.

BACTERIOLOGICAL-CHEMICAL INVESTIGATIONS.

WASHINGTON OFFICE.—Twice the number of skilled assistants and three times the space and equipment will be needed to develop and conclude the lines of investigations outlined in the preceding year, many of which are now only partially completed and by their nature require considerable time for thorough investigation.

An investigation of the sanitary condition of the Government buildings at Washington is also under consideration in collaboration with the Miscellaneous Laboratory.

Another line of work which appears to be of particular interest and of practical value is a bacteriological study of fresh meats which have been placed in cold storage, giving attention to the nature of the anaerobic organisms and others which may be concerned with the apparent ripening or softening that is noticeable soon after they are placed in such storage.

PHILADELPHIA OFFICE (FOOD RESEARCH).—During the fiscal year ending June 30, 1908, it is proposed to conduct in this laboratory investigations on the following subjects:

(1) Continuation of the chemical study of the bacterial and enzymic changes taking place in milk.

(2) Microscopically visible changes to be observed in foods in cold storage, particularly poultry, and the microscopic alterations which such tissues have undergone.

(3) Relation of bacteria to chemical and histological changes of flesh and the relative responsibility to be laid upon the fungi as compared with other agencies, such as enzyms, desiccation, etc.

(4) Keeping qualities of different breeds of fowls and of fowls put into the freezer as promptly as possible after killing and at varying periods between slaughtering and putrefaction. It is also planned to begin observations upon the effect of long-continued low temperatures of varying intensity on bacteriological and chemical changes in various food products.

PUBLICATIONS.

The increase in publications and job printing naturally resulting from the general growth of the Bureau will necessitate the appointment of an assistant editorial clerk, and a typewriter especially fitted to copy technical manuscripts, keep records, take charge of mailing lists, distribute publications, etc.

The only important work in arrears is the editing of the reports on the experiments for the determination of the effect of preservatives and artificial coloring materials on health and digestion, and during this year it is expected with the additional force to bring all of these reports now in arrears up to date. As much haste will be made as is compatible with the extreme care necessary in the compilation of the voluminous material involved.

REPORT OF THE CHIEF OF THE BUREAU OF SOILS.

U. S. DEPARTMENT OF AGRICULTURE,
BUREAU OF SOILS,
Washington, D. C., November 8, 1907.

SIR: I have the honor to transmit herewith a report upon the work of the Bureau of Soils for the fiscal year ended June 30, 1907.

Respectfully,

MILTON WHITNEY,
Chief of Bureau.

Hon. JAMES WILSON, *Secretary.*

PROGRESS OF THE SOIL SURVEY.

The area surveyed and mapped during the fiscal year was 20,560 square miles, or 13,158,400 acres. The area surveyed during the preceding fiscal year was 19,341 square miles, and there have been completed to June 30, 1907, surveys covering a total of 139,247 square miles, or 89,118,080 acres. The total area in farm land as given by the United States Census of 1900 amounts to 841,201,456 acres. The

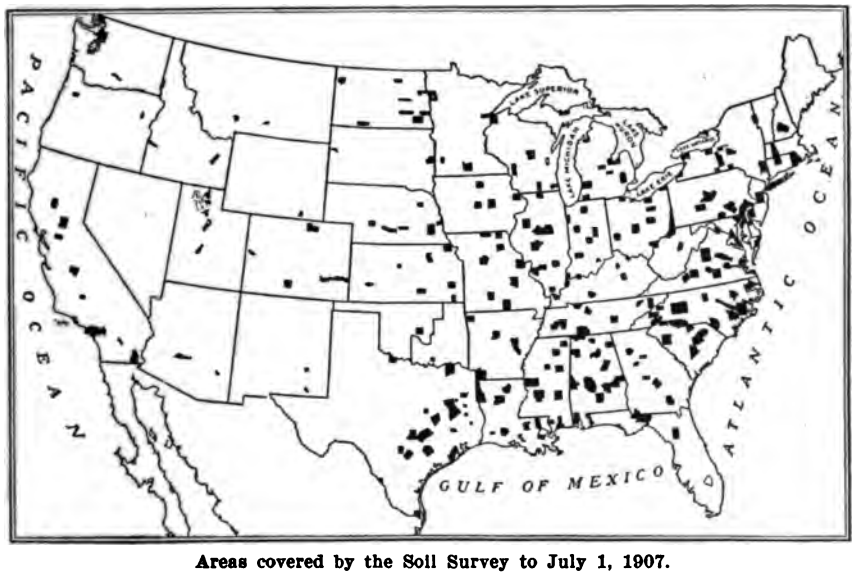

Areas covered by the Soil Survey to July 1, 1907.

Bureau has surveyed, then, an area equivalent to more than 10 per cent of the area represented by the farm lands of the United States.

The accompanying sketch map shows the distribution and relative size of the soil surveys in each State and Territory where such work has been carried on.

Work was undertaken during the fiscal year ended June 30, 1907, in 36 areas, distributed through 20 States. From 14 to 17 parties have been kept in the field continually, and these parties have been so distributed that all field work in the South Atlantic or Gulf States has been done during the winter months and in the States farther north during the summer months.

The areas surveyed and their respective costs are given in the following tables:

Areas surveyed and mapped during the fiscal year ended June 30, 1907, and the areas previously reported.

State or Territory.	Area surveyed during 1907.	Area previously reported.	Total area surveyed.	
	Sq. miles.	*Sq. miles.*	*Sq. miles.*	*Acres.*
Alabama	2,265	7,492	9,757	6,244,480
Arizona	.....	611	611	391,040
Arkansas	1,064	1,613	2,677	1,713,280
California	612	6,479	7,091	4,538,240
Colorado	.....	2,428	2,428	1,553,920
Connecticut	.....	518	518	331,520
Delaware	.....	314	314	200,960
Florida	585	2,388	2,973	1,902,720
Georgia	.....	2,422	2,422	1,550,080
Idaho	.....	1,135	1,135	726,400
Illinois	.....	5,925	5,925	3,792,000
Indiana	324	2,923	3,247	2,078,080
Indian Territory	.....	440	440	281,600
Iowa	.....	2,303	2,303	1,473,920
Kansas	441	2,734	3,175	2,032,000
Kentucky	.....	2,049	2,049	1,311,360
Louisiana	807	4,393	5,200	3,328,000
Maryland	.....	2,663	2,663	1,704,320
Massachusetts	.....	796	796	509,440
Michigan	250	3,538	3,788	2,424,320
Minnesota	1,133	1,064	2,197	1,406,080
Mississippi	1,513	3,805	5,318	3,403,520
Missouri	523	4,570	5,093	3,259,520
Montana	.....	432	432	276,480
Nebraska	818	2,088	2,906	1,859,840
New Hampshire	723	200	923	590,720
New Jersey	.....	1,303	1,303	833,920
New Mexico	.....	129	129	82,560
New York	973	3,880	4,853	3,105,920
North Carolina	1,033	6,978	8,011	5,127,040
North Dakota	1,104	2,690	3,794	2,428,160
Ohio	443	3,740	4,183	2,677,120
Oklahoma	.....	720	720	460,800
Oregon	.....	446	446	285,440
Pennsylvania	276	2,994	3,270	2,092,800
Porto Rico	.....	330	330	211,200
Rhode Island	.....	1,085	1,085	694,400
South Carolina	690	4,657	5,347	3,422,080
South Dakota	92	485	577	369,280
Tennessee	500	3,643	4,143	2,651,520
Texas	3,547	8,920	12,467	7,978,880
Utah	.....	1,501	1,501	960,640
Vermont	.....	227	227	145,280
Virginia	518	5,016	5,534	3,541,760
Washington	23	1,268	1,291	826,240
West Virginia	225	584	809	517,760
Wisconsin	78	2,459	2,537	1,623,680
Wyoming	.....	309	309	1,197,760
Total	20,560	118,687	139,247	89,118,080

Areas surveyed and mapped and cost of field work during the fiscal year ended June 30, 1907.[a]

State or Territory.	Area.	Area surveyed.	Cost per square mile.	Total cost.
		Sq. miles.	*Dollars.*	*Dollars.*
Alabama	Butler County	771	2.59	1,996.26
Do	Marion County	744	3.02	2,243.53
Do	Talladega County	750	2.59	1,939.97
Arkansas	Conway County	575	2.42	1,388.62
Do	Fayetteville area [b]	408	2.91	1,188.52
Do	Prairie County [b]	81	2.13	172.92
California	Colusa area [b]	612	11.26	6,892.78
Florida	Jefferson County	585	4.56	2,667.79
Indiana	Greene County	225	2.89	649.40
Do	Marion County	99	2.25	223.13
Kansas	Riley County [b]	441	3.07	1,350.78
Louisiana	Winn Parish	807	2.80	2,261.83
Michigan	Cass County [b]	250	1.36	339.34
Minnesota	Blue Earth County [b]	529	2.00	1,056.82
Do	Crookston area [b]	604	1.88	1,133.21
Mississippi	Jasper County	647	3.34	2,162.10
Do	Oktibbeha County	446	5.13	2,288.18
Do	Prentiss County	420	3.44	1,444.96
Missouri	Putnam County	523	1.91	1,000.88
Nebraska	Lancaster County [b]	558	2.03	1,129.75
Do	North Platte area	260	1.53	398.47
New Hampshire	Merrimack County [b]	723	2.12	1,528.73
New York	Dutchess County	55	4.09	224.92
Do	Madison County [b]	379	3.08	1,167.31
Do	Niagara County [b]	539	3.87	2,085.32
North Carolina	Edgecombe County [c]	516	1.91	985.13
Do	Henderson County	47	3.31	155.63
Do	Robeson County [d]	98	3.37	329.79
Do	Transylvania County [e]	372	4.34	1,616.40
North Dakota	Ransom County [b f]	656	1.42	931.31
Do	Williston area [g]	340	3.02	1,027.87
Do	Morton area [h]	108	3.18	343.97
Ohio	Meigs County	443	3.15	1,396.50
Pennsylvania	Center County	120	5.73	687.28
Do	Johnstown area	156	2.05	319.89
South Carolina	Lee and Sumter counties	690	4.12	2,845.67
South Dakota	Bellefourche area	92	6.01	552.84
Tennessee	Giles County	15	4.06	60.91
Do	Grainger County	307	2.18	669.60
Do	Madison County [b]	178	1.62	287.81
Texas	Bastrop County	881	2.65	2,331.25
Do	Brownsville area	189	6.96	1,316.62
Do	Cooper area	625	3.62	2,261.75
Do	Laredo area	156	5.72	889.04
Do	Robertson County	913	2.21	2,014.65
Do	Wilson County	783	2.12	1,661.48
Virginia	Chesterfield County	478	4.09	1,953.96
Do	Montgomery County	40	7.75	309.89
Washington	Whatcom area	23	10.27	236.27
West Virginia	Middlebourne area [i]	125	4.84	605.00
Do	Wheeling area	100	3.55	354.58
Wisconsin	Racine County	78	6.21	483.54
Total		20,560	3.19	65,564.15

[a] This includes the salaries of the men while in the area and their subsistence expenses, but not cost of transportation to and from the area.

[b] The portions of these areas surveyed in the preceding fiscal year were given in the last report.

[c] Of this amount $365 was paid by the North Carolina Department of Agriculture.

[d] Of this amount $129.72 was paid by the North Carolina Department of Agriculture.

[e] Of this amount $734.80 was paid by the North Carolina Department of Agriculture.

[f] Of this amount $270 was paid by the Agricultural and Economic Geological Survey of North Dakota.

[g] Of this amount $263.60 was paid by the Agricultural and Economic Geological Survey of North Dakota.

[h] Of this amount $47.50 was paid by the Agricultural and Economic Geological Survey of North Dakota.

[i] Of this amount $199.98 was paid by the West Virginia Geological Survey.

RECAPITULATION OF SOIL SURVEY WORK FOR THE FISCAL YEAR 1907.

Cost of field work	$65,564.15
Supplies and other expenses	2,714.03
Traveling expenses between areas	3,830.68
Total cost of soil survey	72,108.86
Paid by State organizations	2,010.60
Paid by Department of Agriculture	2,098.26
Area surveyed, square miles	20,560
Cost of work in field per square mile	$3.19
Transportation, supplies, and other expenses per square mile	$0.32
Average total cost per square mile	$3.51
Average cost to Department of Agriculture per square mile	$3.41

SUMMARY OF THE RESULTS OF THE SOIL SURVEY.

ALABAMA.

Butler, Marion, and Talladega counties were surveyed and a great variety of soils and agricultural conditions were found and reported upon. Butler County lies wholly within the Coastal Plain, and the Norfolk, Orangeburg, and Houston series of soils are all represented. Possibilities along the line of a further extension of the production of early vegetables, tobacco (both of the Cuban filler and wrapper types), and grass are pointed out in the report. In Marion County cotton is the principal money crop and there is a lack of that diversification in farm products which is justified by the variety of soils encountered and mapped as types of different agricultural value. An important addition to the transportation facilities of the county is now being made, and it is expected that this in combination with improved methods of farming, greater attention to the adaptation of soils to crops, and a recognition of the benefits of suitable crop rotation may usher in a new era of agricultural prosperity. Talladega County is situated in the more hilly and mountainous section of the State; and, while at present cotton is the principal farm crop, there is a growing demand for a more diversified agriculture which is necessary to supply the food needs of the cotton-mill and mining population of the county. The upland soils are separated into two principal groups, derived from limestone and sandstone, and are adapated to a wide variety of uses.

ARKANSAS.

A soil survey of Conway County was made during the fall and early winter of 1906–7. Nine distinct types of soil were mapped. Special adaptation to fruit is indicated in the case of one of the gravelly upland types, and with increased transportation facilities the development of a profitable industry in the production of apples, peaches, and grapes is forecasted. Some of the alluvial soils in the vicinity of Morrillton are adapted to rice and alfalfa in properly selected situations. Cotton and corn are the principal crops at present grown in the area.

The Fayetteville area is located in the northwestern part of the State, in the Ozark region, and is remarkable as being one of the most important apple-producing sections in the United States. The tree plantings—principally of the Ben Davis, Jonathan, and Wine-

sap varieties—in Washington and Benton counties, portions of which are covered by the survey, surpass in extent any of which record exists. The upland limestone soils of the Clarksville series seem to have here just the climatic environment calculated to fit them for profitable fruit culture. Peaches, grapes, blackberries, and strawberries are also grown quite extensively. The fruit industry is given special treatment in the report upon this area.

The Prairie County area mentioned in my last annual report was completed in 1907.

CALIFORNIA.

The work in California has been carried forward by a survey of the Colusa area. Under irrigation, which is practical over large areas, the varied and fertile soils are well adapted to the intensive cultivation of sugar beets, alfalfa, fruit, and the practice of dairying, poultry raising, and kindred industries. A decided awakening to the advantages of a change from extensive dry farming to irrigation farming is now taking place. The Federal Government has tentative plans for an irrigation project in a part of the valley, and a private company is extending work on a large canal which has already furnished some water to irrigators. It was to aid in this development by furnishing a basis for intelligent utilization of the soils to be irrigated that the survey of the Colusa area was undertaken.

FLORIDA.

The survey of Jefferson County constitutes the work done in Florida during the fiscal year just ended. The soils consist entirely of the lighter types, which though used at present for cotton and corn are much better suited to trucking and other special industries, among which may be mentioned the growing of shade-grown Sumatra and open-grown Cuban tobacco and pecans. A start has been made in these industries, and the delimitation of the soils best adapted to the production of these products should prove of value to prospective growers. It has been shown that the light sandy soils with yellow subsoils (Norfolk sandy loam and Norfolk fine sand) are best adapted to shade-grown tobacco and that the soils of similar texture with red subsoils (the Orangeburg fine sandy loam and the Orangeburg sandy loam) are the types which give the best results with the Cuban tobacco.

INDIANA.

In this State Greene County and a part of Marion County were surveyed. Greene County shows a great diversity of soils, especially along the streams. The brown and black bottomlands are well adapted to corn. The lighter-colored upland soils can be improved by addition of organic matter. Stock raising and dairying, as well as fruit growing, can be profitably extended here.

KANSAS.

The soil survey of Riley County was made at the request of the officers of the Kansas State Agricultural College and Experiment Station. The studies of the soils of this area have developed that the

sandy river-bottom soils are well adapted to truck; that the rolling prairie and creek-bottom soils, which are silty in texture, are especially adapted to corn and alfalfa, and that the broken, stony uplands are best adapted to grazing.

The prairie soils are also well suited to the production of wheat, oats, Kafir corn, etc. The production of these crops, together with the raising and feeding of beef cattle and hogs, constitutes the principal industry of the county.

A detailed large-scale soil map of the experiment farm was also made.

LOUISIANA.

A survey of Winn Parish was almost completed during the past year. The building of several lines of railroad through this parish and the removal of the timber over large areas are offering a great opportunity for agricultural development. A soil survey of this parish at this time will therefore furnish information in regard to its soil resources which will be of the greatest value to prospective settlers.

MICHIGAN.

The work in Michigan comprised a survey of Cass County. The soils belong principally to the Miami series of light-colored glacial soils, although some areas of black prairie soils (Marshall series) and also small areas of swamp soils were found. The loams are best suited to general farming, while the sandy soils are well adapted to trucking, small fruits, and berries. The reclaimed areas of Muck are largely devoted to peppermint, but could also be used for celery.

MINNESOTA.

The surveys of Blue Earth County and the Crookston area, which were described in my last annual report, were completed.

MISSISSIPPI.

Three surveys were completed in Mississippi during the period covered by this report, viz, Jasper, Oktibbeha, and Prentiss counties. Jasper County lies southeast of the center of the State and within the Coastal Plain region. It has three distinct soil divisions—the prairie sections of the north and east parts of the county, the more rolling sandy regions covering the remainder of the county, and the bottomlands found in all parts of the county along the streams. Much of the county is still in forests, and as the lands are cut over wide areas are made available for agricultural use. Cotton and corn are the crops grown. With a great variety of soils, ranging from the rich black soils of the limestone prairie to the light sandy soils of the rolling upland, there is excellent opportunity for the introduction of a diversified system of farming as development takes place.

Oktibbeha County is situated northeast of the center of the State. The soil conditions are much the same as in Jasper County. There is a black prairie region, a rolling sandy section, a stretch of "flatwoods," and alluvial bottomlands. Cotton is the staple, and this

is grown on all types of soil. A wide range in the character of the soils invites a similarly wide diversification of crops, and the agricultural possibilities of the county will never be fully realized until the adaptation of the soils to particular crops is recognized. Already some specialization has taken place. The black prairie lands offer unsurpassed opportunities for dairying, the soils being well adapted to forage crops of all kinds, including alfalfa. Other soils of the county are well suited to the production of fruits and truck crops, while in all parts of the county cotton should be supplemented by the subsistence crops, the farmers now buying many necessaries which they could much better produce at home.

In Prentiss County, which lies in the northeastern part of the State, the soil conditions are very much the same as in the two surveys just described. The black prairie soils (Houston series) and the Norfolk and Orangeburg series are found there. The same opportunities for a diversification of crops exists, and the beginning of a change in that direction has been made. The soil survey affords a basis for the intelligent working out of the many problems to be solved by the agricultural experiment farms and settlers in breaking away from the one-crop credit system now prevailing to the manifest disadvantage of the agriculture of the county.

MISSOURI.

The work in Missouri consisted of a survey of Putnam County. The soils are loams and silt loams, with some areas of black clay in the bottoms. They are adapted to general farming and stock raising, corn, oats, hay, and wheat being the principal crops.

NEBRASKA.

The work in this State consisted in a survey of Lancaster County and part of an area around North Platte. Owing to the fact that Lancaster County is covered very largely by the loess, the soils are rather uniform and consist almost exclusively of silt loams. They are very fertile and well suited to general farming, but the yield could be increased by better methods of soil management. A detailed soil map of the experiment station farm was also made. This will furnish a basis for the study of the influence of differences in soils upon the various crops experimented with.

NEW HAMPSHIRE.

In New Hampshire the survey of Merrimack County, which was referred to in my last annual report, was completed.

NEW YORK.

Surveys of Madison and Niagara counties were completed and one of Dutchess County begun. Madison County possesses a great variety of soils, with marked differences in crop adaptation. The Miami stony loam is preeminently the best soil for alfalfa and is also well suited to corn, cabbage, grass, fruits, and dairying. The fine sands are better suited to truck crops than to general farming, for which they are now used. The Dunkirk clay loam and clay are

best fitted for grains and grasses. The survey has also shown that the "exhausted" soils of the Volusia series are admirably situated for stock raising, which, with a rotation of crops and the introduction of modern methods and good management, would restore them to their former productiveness.

Owing to the large development of the fruit industry in Niagara County, a soil survey was requested to determine the soils best adapted to the production of the different kinds and varieties of fruit. The better drained areas are occupied by the lighter-colored soils of the Dunkirk series, while the black soils of the Clyde series are found in the more poorly drained areas. The Clyde soils are best for corn, the Dunkirk loam for apples, closely seconded by Dunkirk silt loam, fine sandy loam, and gravelly sandy loam, the lighter sandy soils for peaches and cherries, and the heavier soils for grains and grasses.

NORTH CAROLINA.

Surveys of Transylvania and Edgecombe counties were completed, and work was in progress in Robeson and Henderson counties at the close of the fiscal year. Transylvania is a typical mountain county, lying in the southwestern part of the State. Six types of soil were mapped. Four of these are mountain soils of wide distribution, classified by the Bureau as the Porters series. Used at present for general farming, they have a special value for the production of apples, and some other fruits. The region is the resort of many summer tourists, and there is a growing demand for poultry and other products to supply hotels and local markets. With the exception of apple orcharding and cattle raising, which could be developed extensively, the opportunities are those appealing most strongly to the small farmer. Certain European immigrants would find here conditions well suited to their capacity for intensive culture of limited areas. The climate is ideal and the soils productive where proper attention is given to rotation and manuring.

Edgecombe is a Coastal Plain county. Here the surface features vary from broad level to rolling areas, and the soils are mainly sands and sandy loams. The dark-colored soils, containing relatively large quantities of organic matter, belong to the Portsmouth group, and the lighter-colored soils to the Norfolk series, the latter covering the greater part of the county. Edgecombe County is, and always has been, the leading agricultural county of the State. In relation to area it is one of the largest cotton-producing counties in the State. It produces a large quantity of bright tobacco. The peanut crop is also important, and some trucking is done. While conditions are very prosperous, there are still throughout the county areas of undeveloped land to be had at very reasonable prices. Edgecombe is an excellent example of the prosperous conditions to be attained by many other counties in the cotton belt through the diversification of crops.

NORTH DAKOTA.

In North Dakota surveys of Ransom County and the Williston area were completed and work was in progress in Morton County at the close of the fiscal year.

Ransom County, though developed agriculturally only within the last twenty-five years, is already an important factor in the State's output of grain. The survey shows that the conditions are complex, necessitating the mapping of 17 distinct soils. Fifty per cent of the area of the county consists of one type, a rich dark prairie soil (Marshall clay loam), admirably adapted to wheat and giving good yields of flax and other small grains.

The remaining area is distributed rather evenly between the 16 remaining types of soil. Extensive cultivation has been the rule, but the time is at hand when more careful methods will have to be employed. The report gives valuable suggestions along this line. For those desirous of emigrating to this country there is first-class farming land in abundance at very reasonable prices. The types of soil to be preferred at present are the Marshall clay loam, Wabash loam, and the several types belonging to the Fargo series.

The Williston area, lying in the southwestern part of the State, comprises a portion of Williams County. Within the last three years almost all the available land has been taken up by homesteaders, who practice dry farming, growing wheat, flax, and other small grains. Before the discovery that dry farming could be carried on successfully a little land had been irrigated by private ditches, and these ranches have been extended considerably. A Federal project will make water available to irrigate a considerably increased area. In view of the cost of water settlers will not be able to compete with dry-farmed products, and it will be necessary to find new crops. Alfalfa can be grown and no doubt other special crops. The soil survey has shown that the soils vary widely in texture and should aid in developing varied agricultural industries.

OHIO.

One additional area was surveyed in Ohio during the fiscal year just ended, viz, Meigs County, in the southwestern part of the State, along the Ohio River. The survey shows a variety of soils ranging from fine friable silt loams and fine sandy loams to clay loam and clay. The greater part of the county is hilly, but there are important terrace and bottomland areas, which widen crop possibilities considerably. The upland soils make fine bluegrass pasture, and sheep raising has long been the leading agricultural industry. The grazing of beef cattle is also important. Agriculture is well systematized. Rotation of crops, looking mainly to a renewal of the bluegrass pastures, is general. A variety of crops is grown, though potatoes, produced on the river bottom soils, which are well adapted to this crop, form the principal export crop.

PENNSYLVANIA.

Work in Center County and in the Johnstown area, Pennsylvania, was in progress at the close of the fiscal year. These surveys will be completed during the coming year.

SOUTH CAROLINA.

On July 1 soil surveys in Sumter and Lee counties had been nearly completed. In Sumter County 11 types of soil of widely different

texture and crop adaptations were established. The surface features of the county vary from that of a rough hilly section to areas approximately level and in many cases swampy. While the chief industry is cotton production, the diversity of soils would point out the practicability of a much greater diversification of crops. The soils of the Orangeburg series occupy the western and northern or hilly section of the county and are well adapted to the growing of fruit, especially peaches.

The Norfolk and Portsmouth soils occupy the central southern and eastern sections of the county. The Norfolk soils could be used to great advantage for early truck, especially where artesian water is found, which would enable the grower to practice irrigation. The long staple Upland cotton can be grown successfully in this county, and some of the farmers are now cultivating a few acres of this valuable recently introduced variety.

In Lee County the soils are practically the same, although but little Orangeburg clay was encountered. The surface in places is hilly, in others it is level, and there are some swamp lands. The northern part of the county is principally Sandhill and Norfolk sand, which are not very productive at present, but where the clay is near enough to the surface the soils could be used for peaches and grapes, especially the latter.

Level areas of Orangeburg sandy loam occur near Bishopville, which constitutes one of the most desirable upland soils found in the State. In the southern part of the county the Norfolk and Portsmouth soils occur.

In this as well as in Sumter County some tobacco is grown with good results. The Norfolk sandy loam and fine sandy loam are the best soils for this industry. An important problem in both counties is the question of drainage, and ultimately the swamp areas will be brought under cultivation, and their reclamation will greatly increase the resources of the counties in question.

SOUTH DAKOTA.

A survey of the Bellefourche area, situated in the western part of the State, was completed during the year. The region is one in which both irrigation and dry farming are carried on. The area irrigated will soon be extended through work of the United States Reclamation Service now in progress. Soils of residual origin, from shale rock, form the greater part of the territory surveyed. Alfalfa and small grains are the chief crops. Some alkali is present in the soil, although generally in quantities too small to injure crops.

TENNESSEE.

Work in this State was continued by the completion of the Madison County survey and the survey of Grainger and a part of Giles County. Grainger County is situated in the northeastern part of the State, and its surface consists of long parallel ridges with intervening valleys. It possesses a great variety of soils capable of producing many different kinds of crops. Corn is the principal crop, with wheat second. Oats, sorghum, millet, clover, grasses, vege-

tables, and fruits are grown in a limited way. These are planted with little regard to soil adaptation, and it was for the purpose of pointing out the character of soil best suited to the different crops that this survey was undertaken. The map shows the extent of the different soils, and their crop adaptation is emphasized in the report.

TEXAS.

In all six surveys—Bastrop, Cooper, Robertson, and Wilson counties and the Laredo and Brownsville areas—were completed.

Bastrop County shows great complexity of soil conditions, and twenty-three distinct types were mapped, ranging from the stiff, heavy, black clay of the black prairie belt to loose, incoherent white sand. Cotton is the chief crop, with corn, oats, fruits, melons, potatoes, cowpeas, and alfalfa grown in sufficient quantities for local demands. The chance for the development of special industries is unsurpassed. The exceedingly productive soils of the black prairies (Houston series) can be purchased for $10 to $75 an acre, almost equally fertile bottomland soils along the Colorado River for $25 to $75 an acre, and lighter soils, excellent types for cowpeas, melons, fruits, peanuts, sweet potatoes, and tobacco, for $5 to $25 an acre. A little irrigation is practiced along the Colorado River. All the bottomland could be irrigated and a very dependable and profitable trucking industry developed in this part of the county.

The Brownsville area is situated in the southern part of Cameron County. It comprises an area of 218 square miles of land bordering the Rio Grande. The soils, which vary from heavy clays to silty clays, are all closely related, being derived from delta deposits of the Rio Grande. Since the completion of the St. Louis, Brownsville and Mexico Railroad in 1904 the agricultural development of the irrigable lands has progressed rapidly, and the growing of a variety of truck crops for northern markets is now the principal industry. Corn and cotton are also grown successfully both on irrigated and unirrigated land. The region is fast being settled, and the report and map covering the survey should prove of much value in locating the land best suited to cultivation.

The Cooper area, lying in the northeastern part of the State, comprises the southern part of Lamar County and all of Delta County. The region is a high rolling plateau, broken by the valleys of North and South Sulphur creeks. The soil survey showed the predominance of the fertile black prairie soils (Houston black clay and Houston loam), which cover over 230,000 acres, or about 50 per cent of the area surveyed. Cotton and corn are the leading crops. The rich prairie land returns from three-fourths bale to 1 bale per acre. Alfalfa promises to become an important product on these lands.

The Laredo area (part of Webb County) is situated in southwestern Texas, along the Rio Grande, and consists for the most part of rolling land of little present agricultural value, but with a strip of more valuable alluvial land along the river. Agriculturally the area is new, a beginning having been made on irrigated areas in the river bottom in 1891. In 1901 the Bermuda onion was introduced with such marked success that the production has become the main industry of the area. The onions are produced on the silty loam and

silty clay soils along the Rio Grande. The supply of water is ample not only for irrigating the acreage already developed, but for the very much larger area suitable for this crop. Some tobacco has been grown in this region, and it is believed a fine grade of cigar filler could be produced. Cattle from the upland region of the survey form an important article of export.

Robertson County lies wholly within the Gulf Coastal Plain and is situated in the central-eastern part of the State. About 30 per cent of the area is under cultivation. The region consists of level to gently rolling upland, cut by broad bottoms along the larger streams. Twenty-seven distinct soils are shown on the map. Cotton has been and will continue to be the important product of the county, for many of the soils, especially in the Brazos bottoms, are preeminently adapted to this crop. The dark chocolate-red soils (the Miller series) in this situation are no less valuable for the production of alfalfa. Both in the river bottom and in the uplands the opportunities are many for specializing in trucking and fruit growing, in tobacco, and in many other subsidiary crops. Suggestions looking to the diversification of crops and to the utilization of particular soils are given in the detailed report of the survey.

Wilson County is situated approximately 100 miles from the Gulf of Mexico in south-central Texas. The regional drainage is good. Except in the more sandy parts of the county and in parts remote from the railroads the county is comparatively thickly settled. The soil survey shows the existence of 12 distinct types of soil, including 150,000 acres of the heavy black prairie soils, though lighter types of sands and sandy loams predominate. About one-fifth of the county is now under cultivation. Cotton is the dominant crop, and little specializing has been attempted. The soil survey calls particular attention to the great area of soils suited to various lines of agriculture as yet undeveloped and suggests changes in methods of cultivation and in the crops grown.

VIRGINIA.

The soil survey of Chesterfield County was completed in January, 1906. The Coastal Plain deposits overlap the Piedmont in this area, and this causes a wide variation in the soils.

In the northern part of the county the topography is generally rolling. The principal crops are corn, wheat, and oats. A small quantity of tobacco is grown. Very little attention is given to the growing of fruit, although the soils along the higher ridges are admirably adapted to apples, peaches, and grapes, especially the last. The southern part of the county has a level or gently rolling topography, with soils well adapted to the growing of truck and peanuts, as well as for general farming. Interest in the peanut industry is gradually growing, as this has been found to be a very profitable crop. The resources of the county as a whole are subject to great development and the soils offer many opportunities in various lines of agriculture. It is a remarkable fact that with local markets, such as Richmond and Petersburg, just across the river, industries like dairying, the growing of fruit, garden truck, and other special crops have not been developed to any great extent.

WASHINGTON.

A survey around Whatcom is now in progress. This is the fifth survey undertaken in this State.

WEST VIRGINIA.

Cooperating with the West Virginia geological survey, the Bureau finished one survey, that around Wheeling, and was engaged in another, the Middlebourne area, in the fiscal year just closed. The Wheeling area comprises all of Hancock, Brooke, and Ohio counties and a part of Marshall County (in all 315 square miles) or the northern end of the Panhandle of the State. The area is for the most part hilly; and that part which lies close to the Ohio River is steep and broken. Some alluvial areas along the river are well adapted to trucking, and the many mining and manufacturing towns within or near the area cause an active demand for truck and all other farm produce. A system of general farming, in which sheep and cattle raising have a place, is the representative agriculture of the area and should be more generally extended, as the soils are indirectly greatly improved by such a system.

WISCONSIN.

The survey of Racine County showed 12 types of soil ranging in texture from clay loams to light sandy loams. The heavier soils are used for general farming, while the light-textured soils are devoted principally to trucking. The character of the soil is recognized as a very important factor in determining the profits which can be secured from the growing of any crop. The soil survey of this county will furnish valuable information to the large market-gardening interests by indicating the soil best suited to the various crops grown. It has also shown that there are large areas of soils there which need only drainage to enable them to produce abundant crops.

REVIEW OF THE SOIL SURVEY WORK.

From the above brief review of the soil-survey work it will be seen that the cause of American agriculture has been advanced in many States by placing in the hands of the people detailed knowledge of the soils and recommendations as to their crop adaptation. This soil-survey work is so fundamental in its character and its value in this respect is so clearly recognized that the demands for it are increasing far beyond the ability of the Bureau to meet them with its present limited resources. The demands for the soil surveys continue in great number from many different interests. Prominent among these are the requests from railroad and development companies which are interested in opening large tracts of new country to settlement. Exact information about the soils and the general character of crops that can be grown are wanted at once to assist the new settlers in making the right start. Such knowledge frequently saves years of experimental or, to be more exact, haphazard farming, and coming from such a reliable and disinterested source the large de-

velopment companies are especially anxious to secure it. It is often very desirable to make such surveys as soon as possible in order to protect the interests of the incoming settlers in case any considerable part of a new country undergoing development contains poor, unproductive lands. There are so many great tracts of fertile undeveloped soils still found in various parts of the country that no farmer can afford to purchase worthless lands, and the soil-survey should cover all the better lands at as early a date as possible. The most imperative need for such work is in the Southern and Western States, where the extension of new railroads is making available for settlement large areas of undeveloped country. Recognizing the value of the soil surveys in delimiting the extent of certain types of soils peculiarly suited to valuable specialized crops, the demand for such work is increasing in many of the older sections, where tobacco, fruit, truck, or other high-priced crops are successfully grown. For example, if a soil survey is made of a county in which the peach industry has been developed on certain soils, the adjoining counties also want surveys to determine whether they possess soils that can be utilized for peach growing. In some cases it has been stated that the prices of land have materially increased when it was known through the soil survey that a given county contained large areas of certain soil types that would produce high-grade cigar tobacco.

Demands for soil surveys increase from all classes of investigators who are working upon almost every line of scientific agriculture. The peculiarities, or more strictly speaking the individuality, which a given soil type possesses must be taken into account if we are to make progress in plant breeding and selection, in fertilizer practice, in cultivation—in fact, in all work looking to the improvement of cultivated crops. For example, if we by breeding improve the quality of cotton on a certain type of soil, such improvements are frequently lost if we attempt to grow the same cotton on soils markedly different; again, if we work out the best crop rotation for a field or farm, it becomes necessary to know the extent of similar soil for which this rotation may be applicable to derive the greatest good from such work; and in order that their work may have far-reaching results investigators are requesting soil surveys from all sections of the country. The introduction of agricultural instruction in common as well as high schools and the extension of agricultural schools create a demand for knowledge of the soils and of general agricultural conditions of the country contained in the soil-survey reports.

In addition to these and other demands for the regular soil surveys, requests for special soil surveys, such as the surveys of experiment stations and agricultural schools, are increasing. These are desired on a sufficiently large scale to show all minor variations of the soil in order to furnish a satisfactory basis for experimental work of various kinds where the least soil difference will be noticeable. During the last fiscal year the time spent in making such surveys has greatly exceeded that of any previous year.

In contrast to the detailed surveys just mentioned the Bureau is in receipt of requests for reconnoissance surveys which will include large tracts of lands, or in some cases entire States. Where the soils of a large area or State are but little known and it is realized that il maps showing the general soil conditions would assist in the ricultural development it would seem that such requests might be

very properly complied with. Up to the present time the difficulty has been to meet the demands of those asking for the regular soil surveys, since quite frequently very urgent requests have had to wait, the Bureau with its present equipment of men and resources being able to take up the work only after considerable delay.

Cooperation has been continued with many State organizations as heretofore and with the United States Reclamation Service. This has been of great assistance, since in many cases it has enabled the Bureau to accomplish a much greater volume of work than it could have done by means of its own resources. More recently an active interest has been manifested by some of the State legislatures, and steps have been taken to pass bills appropriating a certain sum of money to cooperate with the Bureau until the survey of the entire State is completed. Such a bill has just been passed by the Alabama legislature, appropriating $10,000 annually for such work, allowing the Bureau to have general supervision of the work, including the publication of the maps and reports. The Bureau likewise has set aside a similar sum for work in Alabama, and a number of parties will be maintained continuously in the field until the State is entirely surveyed. Such schemes of cooperation are very desirable for all parties concerned and greatly assist in getting the soil-survey work for large sections of the country completed at as early a date as possible, something which has always been recognized as highly important. To enter into similar cooperative work with many States, however, will materially reduce the survey work in other States, unless more liberal provision is made in the future.

SOIL UTILIZATION.

The progress of the Soil Survey work in the United States, covering as it has a total area of 139,247 square miles, located in forty-eight States and Territories, has placed the Bureau of Soils in touch with many of the most important agricultural problems that confront the American people at the present time, and for which, with the increase in population and with the increasing demand for agricultural lands, there is a growing need of solution. In order that the general facts brought out by the work of the various soil surveys might be brought directly home to the people chiefly concerned with these results, a new division, the Division of Utilization of Soil Resources, was formed in the Bureau of Soils during the present year. This division has for its purpose the long-continued observation, classification, and correlation of soils and crop facts, in order that there may be ascertained by special investigators new uses now unperceived for each and every acre of agricultural land in the United States, so that statistics will no longer report less than one-half of the land area of the country apportioned into farms, and less than one-fifth of that area actually improved and tilled. From these studies, which will result in the development of the laws of soil and crop association, it will undoubtedly be possible in the near future to increase the number of great staple crops above the scant dozen now reported, and to present the great fundamental facts of crop adaptation, soil management, and soil fertilization in such a manner that not only each crop may be produced upon the character of soil best suited

for its production under given climatic surroundings, but that each variety of each great staple crop may be adapted to local peculiarities of soil and the climate. The discussion of soils in the past has been a discussion usually confined to corn soils, wheat soils, cotton soils, grass soils, or the like. Little attention has been paid to the pertinent fact that each of these crops has developed well-marked varieties suited to different soils, different climates, and different agricultural regions. It has become necessary to study not alone tobacco soils, but cigar-wrapper tobacco soils, or cigar-filler tobacco soils. This has been recognized. It is now necessary to emphasize the equally important fact that corn and wheat, cotton, rice and the other great staple crops should be studied as varieties adapted to different kinds of soil under varying climatic conditions.

Some of the great problems that must be taken up at once by the Bureau, and which this new division will investigate, may briefly be stated at the present time:

(1) During the last twenty years vast areas of forest land have been cut over, and their value as forest-producing soils has either vanished or been decreased. Large areas of land in the south Atlantic and Gulf States which have been devoted to the production of naval stores and lumber have been denuded of their pine forests, and the once forested soils are now available for agricultural uses. Within very recent years the value of these soils for the production of annual crops was considered as very low. The study of these soils, which has been extensively conducted by the Soil Survey, shows that under proper methods of tillage, of fertilization, and of crop rotation they have not only a high value for the production of such special crops as winter and spring truck crops, tobacco, and the like, but also for the production of great staples like cotton, corn, and the forage crops. The proper adaptation of crops to soil, the proper preparation and cultivation of these soils, and their proper fertilizing and manuring constitute great problems for study by the Bureau. Not only will it be necessary to study the conditions which actually obtain, and to gather together the facts which have been worked out through the operations of practical farmers, but also it will be necessary to study, by various laboratory and greenhouse methods, the fertilizer and manurial requirements of different crops on these different soils.

Similar problems are presented by areas located in the States adjoining the Great Lakes. The cut-over pine lands and also the hardwood lands of this region are now being offered for agricultural occupation and are being sold to actual farmers. Since these lands have not before been occupied to any extent for agricultural purposes, there is no great body of tradition or of practical experience by which the increasing farm population will be guided in the selection of crops and of cultural methods for the production of these crops.

These two examples serve only to illustrate the necessity for systematic work in the study of the soils, crop adaptations, methods of soil management, and methods of soil fertilization for new agricultural lands which are being occupied, or soon must be occupied, as American farm homes. The same observations are true of other

extensive bodies of land formerly nonagricultural, which are being made available for occupation as farms.

Another group of problems which must be solved by the Bureau, following the fundamental work of the Soil Survey, is that group connected with the utilization of arid and semiarid lands, considerable areas of which are either being placed under irrigation at the present time or are being farmed through new methods of soil management to crops suited to semiarid conditions. Here also a large extent of territory is being developed under conditions of climate, crop and soil adaptation, and soil management which are novel, not only to the majority of American farmers, but are also absolutely unknown to the majority of agricultural immigrants from foreign nations. In order that great waste of effort and money may not occur in the development of certain of these areas, extensive soil surveys should be made to determine the character of these soils, the best adaptations of soils to crops, and the best methods for the tillage and cultivation of these soils. Such surveys must be followed by demonstrations of crop adaptation and soil management.

(2) The previous investigations of the Soil Survey, made over an extended period of years, have shown certain regions in the United States where economic conditions have so changed, particularly with regard to market and transportation facilities and concentration of population, that nice specialization in crop production must be brought about. Farms are becoming vacant or are sinking to a low level of extensive cultivation. This problem is not exclusively confined to any one region, although certain Northeastern States are most directly and immediately affected by these conditions. Throughout these Northeastern States, side by side with farms which have been deserted by their former occupants, are other farms that are known to be in a high state of cultivation and which are yielding to their owners and operators a good living and a good rate of interest upon the land value. It is essential that the Bureau should make a thorough study of crop adaptation, of soil management, and soil fertilization throughout a broad region covering the Northeastern States, in order that the best practical facts actually worked out by these successful farmers may be ascertained, classified, and applied to the individual problems presented by their less successful neighbors. This problem affects not only the welfare of the rural population, but also the ultimate welfare of the consuming population in the great seaboard cities of the North Atlantic coast. If great manufacturing centers are to continue to be fed at a reasonable rate with perishable farm products, which must be raised within a restricted region around such cities, it is essential that the low-priced lands of the Northeastern States should be occupied by farmers who thoroughly understand and faithfully practice the best modern methods of soil utilization and soil management. These same regions can not continue to compete with other regions more favorably located for the production of the great staple crops. A careful study of adaptation of crops to soils and of the proper methods of soil management for the production of new crops must be made in order to enable the farmers in these regions gradually to modify the character of their products, in order to meet changed demands and changed conditions of labor, transportation, and mar-

kets. This work has been successfully started in New York, Pennsylvania, and Ohio.

(3) The region of the Appalachian Mountains, with its included valleys and its adjoining Appalachian Plateau, is one which is coming to be recognized as peculiarly suited to the production of various forms of tree fruits. Within some portions of this region systematic efforts have been made to work out the close adaptation of different varieties of apples and peaches to the widely differing soil conditions and conditions of soil drainage and exposure. A sufficient body of information is available, so that the soils to which the main varieties of winter apples are adapted can be specified in regions where soil surveys have been made. A similar body of information should be secured in regard to other varieties of apples and to the different varieties of peaches, pears, plums, and cherries. Good examples of the close relationships between the character of soil and the variety of apple which can be grown are shown in the Virginia fruit region in the adaptation of the Albemarle Pippin, Winesap, York Imperial, and other varieties to particular soils and particular localities. An effort is being made to accomplish a complete study of these important relationships between soil and fruit variety for the purpose of giving scientific direction to the efforts of commercial and individual orchardists interested in this general section. From the Hudson River to northern Alabama lie extensive tracts of land now occupied by stony pastures or by unremunerative forest remnants which, unless reforested or used for orchard purposes, must continue to have a very low value. The solution of the great problem of the proper development of this territory has been undertaken during the present year.

(4) A study of the cotton soils in the Gulf States has shown that several of the more important varieties of cotton which have been developed through years of careful breeding with a given soil environment and under fixed climatic conditions retain their peculiar characteristics in localities remote from the locality where they were originated and developed only when maintained under the same or closely similar conditions. It has been found, for instance, that one particular variety of cotton grown for twenty years upon loose, coarse sand, thereby acquiring different habits of growth and the peculiarity of early maturity, rapidly reverts to other quite different characteristics when planted successively for two or three years upon bottomland soils or upon upland soils possessing a dense retentive clay subsoil. This fact is typical of a variety of facts which might be cited in connection with the adaptation of different types of cotton to specific types of soil. With the acute competition of present days in the production of all staple crops, it becomes necessary to make a detailed study of the adaptation of the different varieties of cotton to the different varieties of soils and to ascertain what peculiarities of soil preparation and of soil management are necessary for the most economical production of each variety of cotton upon each great type of soil. This work has been undertaken by the Bureau, and should be carried through to an ultimate completion for the benefit not only of the cotton-producing farmers, but also for the benefit of American cotton manufacturers and of the entire people, who universally make use of cotton products in some form or other.

(5) Another of the great needs of the cotton-producing States is a sufficient amount of home-grown grain and forage crops for the feeding of the work stock, cattle, and hogs upon the cotton farms and plantations. It was maintained for years that there were few grasses suited to production upon the peculiar soils and under the peculiar climatic conditions of cotton-growing States. Within the last decade it has become evident that a great variety of forage and grass crops can be raised within this section, and it is evident that they should be raised at home, in order not only that the cost of cotton production could thus be reduced, but also in order to bring about a healthful diversification of the farming industry in a region peculiarly given to the one-crop system.

Within certain States of the cotton belt there exist large tracts of land upon which alfalfa grows to peculiar advantage. Some of the soils of these regions, while not especially well suited to the production either of cotton or of corn, are well adapted to the growing of alfalfa, and this crop has come to be recognized as possessing the greatest possibilities for the production of a large amount of valuable forage upon a limited acreage. Areas of land well suited to the growth of alfalfa have been shown to exist in Alabama, Mississippi, and Texas, and in all of these States practical farmers are now securing high crop values per acre through the successful growing of this crop. As yet only a small percentage of the total area of the typical alfalfa soils has been planted to that crop. The extension of the alfalfa-producing soils should be carefully worked out. With the introduction of this new crop many questions of soil management, such as proper depth of plowing, proper fertilization of the land, and others of similar character will present themselves, not only to individual farmers and to restricted communities, but also to areas which extend through several States. It is necessary that the Bureau should make a thorough study of the soil requirements and cultural methods best adapted to the production of this crop throughout this region. This work is particularly important in portions of Alabama and Mississippi.

(6) A similar problem in regard to the production of corn also presents itself in the South Central, South Atlantic, and Gulf Coast States. In some of these regions there have already been developed varieties of corn well suited to the local soil and climatic conditions, but throughout the major part of these regions the greater part of the seed corn used by the farmers is secured from more northern localities, where it has been bred under entirely different conditions of climate and soil environment. It will be necessary, in order that corn production may be greatly increased throughout these States, to make a thorough study of the adaptation of existing varieties of corn to the known soil types, and the remarks which have been made in regard to cotton varieties and their adaptations to soils apply with equal force to corn.

(7) The existence of extensive tracts of undrained and undeveloped swamp lands east of the Mississippi River has been called to the attention of the American people repeatedly during the past twenty-five years. Not only do these tracts of swamp land serve as a reserve of agricultural territory existing in nearly every State, but frequently they would constitute, when properly drained, some of the richest

soils remaining yet undeveloped in the United States. They may be described as "the cream of the upland" washed down and accumulated in the swamp. The studies of the Bureau of Soils have shown conclusively that the character of these swamp lands varies widely within narrow limits. Not only does the character of soil in the swampy alluvial bottoms differ materially from that in the great pocosons, savannas, and everglades, but within restricted areas adjoining acres or square miles of swamp land vary as widely in their characteristics as do the soil types of the upland. In order that when drained these swamp lands may be economically utilized, it is necessary to conduct a study of the crop adaptations of such swamp lands as are already under cultivation, that such information may be available for application to undeveloped areas. The utilization of these lands is not only of national economic importance, but it is also a necessity in many instances for considerations of health in adjoining uplands. A systematic effort should be made to throw all light possible upon the crop adaptations and methods of soil management suited to the development of these lands.

(8) In the far western States the Bureau has endeavored to determine how the greatest returns may be derived from large bodies of land at present not yielding profitable crops. This work has been carried on by special treatment of the soil to overcome alkali, hardpan, or other unusual soil conditions, or by studying the soils with reference to their adaptation to crops at present not extensively cultivated, but which may be introduced when the soil is properly handled to bring out its greatest producing value.

The Bureau during the past year has concluded the demonstration work in reclaiming small tracts of alkali land by flooding, combined with underdrainage, in five prominent irrigation districts. The successful completion of this work merely strengthens the former position of the Bureau on the alkali question, namely, that damaged lands can be permanently reclaimed at a cost well within the limits of economy. The results of this transformation of alkali-ruined lands into fertile fields producing remunerative crops have recently been published for three of the localities where such work was undertaken, and should prove a valuable guide for farmers contemplating similar reclamation work.

The Bureau has also started a number of experiments in certain parts of California with various crops upon soils containing only moderate quantities of alkali. The final outcome of these experiments will prove very interesting, since, in case they prove successful, large bodies of hitherto waste land can be utilized for crops that will enhance their value very greatly.

Special study of the grape soils of California has shown that the color, depth, and texture of the soil all exert a great influence upon the yield, color, and other quantities that determine the commercial value of the grape for special purposes. It has also been found that many of the soils underlain by hardpan can be used for grapes, peaches, prunes, apricots, and other fruits when strata of sand underlie the hardpan. Blasting or breaking through the hardpan readily allows the roots of vines or trees to penetrate to the sandy layers in search of moisture and food supplies.

On account of the recent interest manifested in planting eucalyptus groves studies have been made of the localities where such work would prove most profitable. Many of the coast valleys of California possess extensive areas of low-priced rolling and broken lands with soils well adapted to this industry. By fallowing prior to planting and by cultivating the young groves for a year or two such lands steadily advance in value, as the growth of wood is quite rapid. In this manner a goodly revenue is derived from cheap lands that are at present only valued for the scant pasturage they afford. The extent and nature of the soils adapted to eucalyptus planting is being determined as rapidly as possible.

(9) In addition to the study of these and of similar specific soil problems, the Bureau has also been represented in several of the educational tours which have been made in different parts of the United States. It has been recognized by the Bureau that the fund of valuable information secured by the field work and by the laboratory investigations of trained specialists should be presented before the people of the United States in its most available form. In order that the information disseminated through the Soil Survey reports, bulletins, and circulars of this Bureau might be vitalized and presented most forcefully, different members of the staff of the Bureau have joined other experts along different lines of activity in the Department of Agriculture in lecture tours through several States. This method of presenting the latest results of agricultural research directly to the people in such form that the hearer may question the speaker, not so much concerning the general principles as concerning the application of those general principles to local conditions, has been found very effective. In almost every case where this line of work has been undertaken there has been an instantaneous demand for direct service from the Bureau to communities and individuals engaged in various agricultural pursuits. It has also been learned that in many cases the publication of bulletins or circulars or reports does not satisfy the demand for specific information in regard to specific farm problems. It is recognized that while fundamental principles may be more or less unvarying throughout broad agricultural regions there are peculiar conditions to be encountered upon each farm or plantation in the United States, and that some method must be devised for applying the particular principle to the particular problem for the benefit of the individual. For example, in the same general region, producing the same crops, the specific point in soil management upon which one farmer may desire detailed information is not at all the point upon which his neighbor would desire to be informed. It has been freely stated to the representatives of the Bureau by farmers and by planters that very frequently the determination of the cause of difficulties in crop production is the very thing in which the individual needs the greatest help. That is, the Department of Agriculture must not only furnish general formulæ for solving farm problems, but must also determine the particular difficulty which is to be treated in general regions, in specified communities, and upon individual farms. In order that the vast amount of research and of resulting information secured by the Bureau of Soils may be made available to the American agricultural public, the Division of Soil Utilization has been charged with

the duty of taking up the study of regional, community, and individual problems of this character, and is devising means whereby the region, the community, and the individual may be directly aided in the solution of the problem presented by each.

In order that the present demands for work of these varying characteristics may be met in any adequate form for the ensuing year, not less than 25 field parties should be maintained in different parts of the United States by the Bureau. Each one of these parties must be charged not only with the study and solution of great National and regional problems, but also with the application of the results of these studies to farm conditions.

SOIL FERTILITY INVESTIGATIONS.

A noteworthy advance has been made during the last year in soil fertility investigations to determine in soils the causes or factors of low crop production, and it has been possible to obtain a broader survey of the effect of organic plant remains and to form a clearer conception of the manner in which these function in the soil. It has been shown that the poor qualities of unproductive soils are not always due to lack of mineral plant food, but often to the presence of substances actually hindering plant growth. The toxic properties of soils have been demonstrated and the existence of toxic bodies is a reality with which it is necessary to deal in future soil studies on the fertility and infertility of our agricultural lands.

Extended investigations have been carried on with infertile soils in determining the presence of toxic conditions, in isolating and identifying these bodies, and in studying their properties. The determination of the exact nature of these bodies is a difficult task, as relatively small quantities seem to be involved and separation by ordinary means is exceedingly difficult. Methods have, however, been devised by which these technical difficulties have been overcome, and gratifying results have been obtained, as several bodies have been successfully isolated and their chemical identities established. The properties of these and related compounds likely to occur in soils have been exhaustively studied with reference to their effect on plant growth, and much valuable information concerning the processes of decay of organic matter in soils has been obtained.

Further investigations into the origin of these substances and the conditions which lead to their formation have been made, namely, whether they are formed by the accumulation of root excreta in a soil where these are not taken care of by natural processes of destruction or decay, whether they are the products of germination, of bacterial or other life processes within the soil, or whether they are formed by the decomposition of vegetable matter under unfavorable conditions in the soil. These various problems in soil physiology have been carried forward and their solution will be of the greatest value to agricultural science; the methods developed and the results already obtained will enable us to unravel the more intricate problems of the soil, furnishing in the end a basis for rational agriculture.

Another important line of investigations has been the study of the conditions and treatment which will attack or destroy these toxic bodies, rendering them harmless to crops. Among these has been the action of fertilizers, the action of plant roots, the effect of

cultivation, with its resulting aeration and oxidation, and also the influence of crop rotation and the action of nonplant-food substances. No less important is the study of the conditions which will prevent the formation in the soil of these bodies, which hinder plant development.

Other lines of work which have been prosecuted during the past year have concerned themselves with the time action of fertilizers, a study of the oxidizing powers of roots and the influence of fertilizers on them, the action of nitrates in overcoming toxic conditions, the study of climatological factors on the products of plant excretions and the action of fertilizers on these, studies on the effect of the organic matter of stable manure, and the processes of oxidation and decay involved in green manuring.

Many of the results of these investigations have already been published in bulletins from this Bureau, and suitable articles published in technical journals. Several other bulletin and journal articles are in press and in course of preparation. Some of the more salient features and results of these investigations are given below:

The toxic bodies found are carbon compounds, and it has been shown that the productiveness of a soil depends largely upon the condition of the organic matter in the soil and the processes which are at work in destroying the plant remains. Several of these toxic bodies have actually been isolated from soils. They are definite chemical compounds, having a characteristic crystalline structure. Prominent among the organic compounds from which these arise are the carbohydrates, proteids, and lecithins, which exist in the living cells of every plant. During the decay of these complex organic bodies a large group of products are formed, many of which are harmful to plant growth.

A great deal of work remains to be done before a thorough knowledge of the significance of these bodies in the soil is obtained. No less important is the knowledge of the best means to overcome their deleterious effects. During the past year many of their properties have been ascertained for many soils, in so far as they influence plant growth. A study has been made of their physical properties, and their effect on the growth, nutrition, or other physiological functions of the plants in the different soils.

Regarding the origin of these bodies, it has been definitely shown that toxic substances arise as the direct result of plant growth and are excreted by the roots of growing plants. Toxic conditions arise if excreted substances from plant roots are allowed to accumulate in the soil. Usually when soils are kept in good tilth by cultivation and continued rotation of crops, toxic root excretions will not accumulate to an extent which will be harmful. But when one crop follows another of the same kind, especially in soils which are in poor physical condition, the excretions may accumulate to a harmful extent. When wheat is grown in close proximity to tree roots it appears to be retarded by excretions from the tree roots. Germinating seeds contain and throw off substances which are detrimental to plant growth if they are allowed to accumulate under unfavorable conditions which do not accomplish their destruction by treatment or by natural processes, such as oxidation or decay.

Another origin of these substances is to be found in the decay of plant remains. During the decay of plants in the soil a large

the duty of taking up the study of regional, community, and individual problems of this character, and is devising means whereby the region, the community, and the individual may be directly aided in the solution of the problem presented by each.

In order that the present demands for work of these varying characteristics may be met in any adequate form for the ensuing year, not less than 25 field parties should be maintained in different parts of the United States by the Bureau. Each one of these parties must be charged not only with the study and solution of great National and regional problems, but also with the application of the results of these studies to farm conditions.

SOIL FERTILITY INVESTIGATIONS.

A noteworthy advance has been made during the last year in soil fertility investigations to determine in soils the causes or factors of low crop production, and it has been possible to obtain a broader survey of the effect of organic plant remains and to form a clearer conception of the manner in which these function in the soil. It has been shown that the poor qualities of unproductive soils are not always due to lack of mineral plant food, but often to the presence of substances actually hindering plant growth. The toxic properties of soils have been demonstrated and the existence of toxic bodies is a reality with which it is necessary to deal in future soil studies on the fertility and infertility of our agricultural lands.

Extended investigations have been carried on with infertile soils in determining the presence of toxic conditions, in isolating and identifying these bodies, and in studying their properties. The determination of the exact nature of these bodies is a difficult task, as relatively small quantities seem to be involved and separation by ordinary means is exceedingly difficult. Methods have, however, been devised by which these technical difficulties have been overcome, and gratifying results have been obtained, as several bodies have been successfully isolated and their chemical identities established. The properties of these and related compounds likely to occur in soils have been exhaustively studied with reference to their effect on plant growth, and much valuable information concerning the processes of decay of organic matter in soils has been obtained.

Further investigations into the origin of these substances and the conditions which lead to their formation have been made, namely, whether they are formed by the accumulation of root excreta in a soil where these are not taken care of by natural processes of destruction or decay, whether they are the products of germination, of bacterial or other life processes within the soil, or whether they are formed by the decomposition of vegetable matter under unfavorable conditions in the soil. These various problems in soil physiology have been carried forward and their solution will be of the greatest value to agricultural science; the methods developed and the results already obtained will enable us to unravel the more intricate problems of the soil, furnishing in the end a basis for rational agriculture.

Another important line of investigations has been the study of the conditions and treatment which will attack or destroy these toxic bodies, rendering them harmless to crops. Among these has been the action of fertilizers, the action of plant roots, the effect of

cultivation, with its resulting aeration and oxidation, and also the influence of crop rotation and the action of nonplant-food substances. No less important is the study of the conditions which will prevent the formation in the soil of these bodies, which hinder plant development.

Other lines of work which have been prosecuted during the past year have concerned themselves with the time action of fertilizers, a study of the oxidizing powers of roots and the influence of fertilizers on them, the action of nitrates in overcoming toxic conditions, the study of climatological factors on the products of plant excretions and the action of fertilizers on these, studies on the effect of the organic matter of stable manure, and the processes of oxidation and decay involved in green manuring.

Many of the results of these investigations have already been published in bulletins from this Bureau, and suitable articles published in technical journals. Several other bulletin and journal articles are in press and in course of preparation. Some of the more salient features and results of these investigations are given below:

The toxic bodies found are carbon compounds, and it has been shown that the productiveness of a soil depends largely upon the condition of the organic matter in the soil and the processes which are at work in destroying the plant remains. Several of these toxic bodies have actually been isolated from soils. They are definite chemical compounds, having a characteristic crystalline structure. Prominent among the organic compounds from which these arise are the carbohydrates, proteids, and lecithins, which exist in the living cells of every plant. During the decay of these complex organic bodies a large group of products are formed, many of which are harmful to plant growth.

A great deal of work remains to be done before a thorough knowledge of the significance of these bodies in the soil is obtained. No less important is the knowledge of the best means to overcome their deleterious effects. During the past year many of their properties have been ascertained for many soils, in so far as they influence plant growth. A study has been made of their physical properties, and their effect on the growth, nutrition, or other physiological functions of the plants in the different soils.

Regarding the origin of these bodies, it has been definitely shown that toxic substances arise as the direct result of plant growth and are excreted by the roots of growing plants. Toxic conditions arise if excreted substances from plant roots are allowed to accumulate in the soil. Usually when soils are kept in good tilth by cultivation and continued rotation of crops, toxic root excretions will not accumulate to an extent which will be harmful. But when one crop follows another of the same kind, especially in soils which are in poor physical condition, the excretions may accumulate to a harmful extent. When wheat is grown in close proximity to tree roots it appears to be retarded by excretions from the tree roots. Germinating seeds contain and throw off substances which are detrimental to plant growth if they are allowed to accumulate under unfavorable conditions which do not accomplish their destruction by treatment or by natural processes, such as oxidation or decay.

Another origin of these substances is to be found in the decay of plant remains. During the decay of plants in the soil a large

number of organic compounds are formed, and under unfavorable soil conditions they may give rise to toxic substances. It is therefore readily understood how processes of oxidation improve soil conditions, since it has been demonstrated by our studies that toxic bodies are converted into nontoxic bodies by oxidation. When the soil is saturated with water or is so packed that a sufficient supply of air is not afforded, the vegetable matter may be imperfectly decomposed, producing toxic substances which temporarily impair the productivity of the soil. When, however, soil is in the proper physical condition it is possible for the beneficial changes known as "humification" to proceed.

It has been shown that the roots of plants have a great oxidizing power and are able to act upon the toxic organic material in such a way that their toxic properties are lost. The large amount of root surface which most plants possess renders this oxidizing power an important one in relation to soil conditions, and especially in relation to the destruction of toxic conditions through crop rotation.

It has been demonstrated that substances commonly used as fertilizers have, in addition to their function as plant nutrients, a well-defined power to overcome and actually destroy toxic bodies. When such substances as nitrate of soda or lime are associated with the activities of growing plants the ameliorating power of the fertilizers is much increased. Some of the most efficient agents in overcoming toxic conditions are substances which add very little mineral plant-food to the soil. These facts are of distinct value in the study of soil and fertilizer problems because it is known that many cases of infertility are simply due to the presence in the soil of toxic bodies.

An important feature in connection with these investigations has been the development of new methods in agricultural research, which has made it possible to attack the intricate problems of the soil. With the methods as developed the laboratories are now engaged in the examination of the nature of the organic bodies causing infertility in soils from various States, covering a wide range of soil types and farm practices, including cotton soils, wheat soils, flax soils, truck soils, corn soils, and grass lands. A special investigation of the infertile silt soils of eastern Maryland is in progress, using the various methods devised in the Bureau. These same methods are being successfully applied, by a party from this Bureau detailed to the Pennsylvania Experiment Station, to the soil problems in connection with the plats which have been running for over twenty-five years under different systems of fertilizer treatment.

PHYSICAL AND CHEMICAL INVESTIGATIONS.

The laboratories have continued to furnish the physical and chemical data necessary for the interpretation of the field studies of the Bureau. The amount of analytical work thus required has continued to increase in spite of efforts to keep it within the smallest limits consistent with the requirements of the field investigations. The increase is further augmented by the growing demands for such data from other bureaus and offices, which are finding that their investigations require a fuller knowledge of the soil. Upward of 2,500 sam-

ples of soils have been analyzed, many of them requiring both a physical and a chemical examination, and about 400 miscellaneous samples of fertilizers, irrigation and drainage waters, etc., have been examined. Besides furnishing such analytical data the laboratories have continued certain fundamental investigations called for by the problems in the field work and necessary to an understanding of the handling of soils and fertilizers. Among the subjects investigated during the past year may be cited the relation of physical condition to moisture content; the management of soils to conserve moisture; absorption by soils of gases and dissolved substances; the solubility relations of the phosphates found in soils and fertilizers; the lime and nitrogen compounds recently come into use as fertilizers; mine tailings and similar waters used in irrigation which carry copper, iron, and similar deleterious substances; apparatus for the determination of organic matter in soils; the chemistry of white and black alkali, with special reference to the action of more soluble salts on gypsum and lime carbonate; the mechanical distribution of mineral plant nutrients in the soil and the minerals from which they are derived; the nature and physico-chemical relations of the organic components of the soil; the significance of the colored iron compounds for soil fertility, etc.

The results of these investigations have been published in part and the remainder will be ready for publication at an early date. The material comprises 7 Departmental bulletins and 22 technical papers which appear in regular scientific journals. From the nature of the case much of this work is of technical interest only, but some of these results having a more popular interest may be briefly mentioned here.

It has been shown that when a soil contains a certain critical amount of moisture, readily recognized by all practical cultivators and designated popularly as the optimum water content, it can be put in a condition best adapted to plant growth. A rigid investigation in the laboratory has shown that the popular opinion that this water content is primarily dependent upon the water needs of the plant is erroneous, and that it is in fact the amount of water at which the soil can be put and maintained in the best possible physical condition for plant growth, practically independent of the nature of the plant; and it has been further shown that the correct principle to be observed in certain methods of intensive cultivation is to maintain the soil at this normal water content rather than to furnish an excess of water periodically, as is commonly done.

In investigations upon the phosphates found in manufactured fertilizers it has been shown that the phosphates do not go into solution in soil water in the form in which they are added to the soil, but are always materially changed into less soluble forms by chemical reactions, whose course has been carefully worked out in these investigations. It has been further shown that the advantages in using commercial phosphates are due to both physical and chemical processes, involving mainly a distribution of the material within the soil, and furthermore, that with the phosphates—as with other fertilizers that have been investigated in this laboratory—the action is mainly upon the soil, and is not dependent directly, as has been hitherto supposed, upon the physiological activities and needs of the plants.

In the work on mine tailings and irrigation waters it has been shown that practical methods of reclamation can be devised where sufficient quantities of lime are available.

During the year an investigation of the distribution of plant food in the clays, silts, and sands of the soils of the United States has been continued, and it has been shown that there is a distinct tendency toward a concentration of the mineral nutrients in the smaller grains; that these mineral nutrients, as well as the minerals from which they are derived, are scattered through the grains of all sizes from sands to clays, and that while the proportion of these minerals varies from soil to soil or from clay to sand, respectively, the common rock-forming minerals are present in all grades of practically all soils.

The absorption of fertilizers containing both organic and inorganic matter has continued to be the subject of investigation during the past year, especially with reference to the distribution of the fertilizer between the solid grains of the soil and the soil solution which forms the nutrient medium for plants. It has been shown that this distribution follows the same laws with soils as with other absorbents, but is complicated by the comparative readiness with which soils are flocculated or deflocculated. It has been shown that in general the absorptive power of soil, either for gases or dissolved substances, is very high, and in the concentrations involved in ordinary fertilizer practice the major part of the added fertilizer is held by the solid particles and not by the soil water. This has an important practical bearing, since it is obvious that a soil should be made as absorptive as possible before adding fertilizers, so that they may be slowly yielded up to the soil water and maintain it at a concentration most suitable for plant growth.

It has long been recognized that the iron compounds in soils have an important significance in determining their crop-producing values. This is reflected in the popular statement that red soils are more productive than yellow soils, and has been the subject of numerous investigations and many publications in geological and agricultural literature. This subject has been taken up and is now under investigation in the laboratories of this Bureau, with the object of determining whether the relative productive power of soils is due to the nature of the iron compounds producing these colors or, as at present seems much more probable, that these colors are symptomatic of present or past conditions, controlling not only the color, but those differences which are directly responsible for productivity.

Certain common soil-forming rocks and rock minerals have been crushed into different-sized soil grains, and the rates of solubility of these different-sized particles have been investigated for the purpose of throwing light upon the rate at which soil minerals can dissolve and supply growing crops with their needed nutrients. It has been shown that with any given mineral or rock the concentration of these solutions rapidly approaches a maximum, the rate depending upon the fineness to which the substance has been reduced, and varying from two or three to about twenty minutes. This has an important bearing in explaining the way in which the concentration of the soil solution is maintained naturally and how the natural process may be modified advantageously by cultural practices.

SOIL MANAGEMENT.

The work of ascertaining the manurial requirements of soils by the paraffined-pot method has been continued during the year, determinations having been made for the principal soil types encountered by the Soil Survey parties in the eastern and southern part of the United States, and the results constitute a part of the published reports issued for each area. The results of these tests are not held to be final, nor are they intended to take the place of field tests, which should follow in order to gather more definite and practical information relative to the amount, time, and manner of applying fertilizer for the different crops grown and the soil conditions that prevail in the widely separated areas surveyed. The results show in general the character of fertilizer, if any, that will prove most efficient on the various soils, and should assist greatly in planning and simplifying any field trials that may be undertaken.

These tests have brought out very forcibly the fact usually recognized by good farmers, viz, that good physical condition and ample organic content are factors of the greatest importance in soil management. They have indicated likewise that the soil requirement for lime, nitrogen, potash, and phosphorus, as determined by the relative growth of plants, bears but little relation to the character or origin of the soil. It more often conforms to the local conditions and the character of the farming. In other words, soils of different types, when in the same locality and subject to like conditions and similar farm practices, usually have like requirements for the mineral constituents, whereas soils of the same type, when widely separated and subject to different conditions and farm practices, often show marked differences in this respect.

An abstract of all experiment-station literature relating to fertilizer tests in the various States fails to show any considerable relation between the character of soil and the efficiency of the several constituents tested. Just as phosphatic limestone varies greatly in its content of phosphorus, or gold-bearing quartz may vary greatly in its gold content, so may soils of the same origin and formation vary greatly in their fertilizer requirements. This variation is not alone the result of differences in climate, but is also being rapidly brought about as a result of the use to which the soil is put by man. While there are some broad generalizations that may be made in regard to the fertilizer requirements of soils and crops, these do not meet the needs of the individual farmer, who should know as accurately as possible what fertilizer formula, if any, should be used on each soil and for each crop, to secure the best returns and at the same time improve the soil for subsequent crops, or at least not admit of its deterioration. This brings us face to face with the fact that each farmer will eventually need to test, on his own land, various fertilizer formulæ, in order to ascertain the one best suited to his purpose. He who continues such tests from year to year will be enabled to meet intelligently the requirements which are sure to change with time.

There are vast areas of land the soils of which, if kept in good physical condition and liberally supplied with organic matter, are not in need of commercial fertilizer for the production of general farm crops. Fertilizers should usually be considered as of secondary importance in relation to the maintenance of soil fertility.

AGRICULTURAL SCHOOL FARMS.

In the State of Georgia representatives of this Bureau have assisted and cooperated with the authorities of that State in selecting a suitable tract of land in each of the eleven Congressional districts for an agricultural school. These tracts, ranging from 200 to 300 acres in extent, were donated by the people of the respective localities. After the selections were approved by the governor and local boards, a detailed soil map was made of each farm by the Bureau, and this was followed by laying out the farms for instructional work, with a view to aiding the study of crop adaptation and soil management. Work similar to that in Georgia has also been carried out in the State of Alabama in cooperation with the local authorities.

ARLINGTON FARM TESTS.

In order to test the effect of substances not usually considered as fertilizers, between 200 and 300 plats were laid out on the Arlington Farm during the spring of 1907. Plats treated with applications of many substances not used as fertilizers were checked with untreated plats and with plats supplied with the usual fertilizer ingredients singly and in combinations. The crops grown on these plats consisted of corn, potatoes, and cowpeas. Wheat, rye, timothy, and clover will be added to the list during the autumn. The effect of the treatments will be measured by the relative growth of the crops, but it is yet too early to report results.

ADVISORY AND COOPERATIVE WORK WITH FARMERS.

There has arisen an urgent demand for advisory and cooperative work with communities and individual farmers along the lines of soil management and utilization, and so far as funds have been available this demand has been met. The work consists in addressing farmers' meetings on matters relating to the crop adaptation of their soils, the crop rotations, methods of cultivation, and manures and fertilizers best adapted to maintaining soil fertility, and in advising personally with farmers on their own farms relative to these and other practical questions. The men assigned to the various districts call on farmers at request and advise with them as to soil problems and the most practical means of meeting them. In the introduction of a new crop like alfalfa, for example, the expert advises the farmer what soil is best suited to it, and as a result of his observations and experience also guides him in the preparation of the soil, the kind of fertilizer or manure, if any, that should be used, and the best time at which to seed, together with the after treatment of the field until such time as the crop can become well established. If there is any question as to the success of such a crop it is started only on a small scale and in an experimental way, if indeed it is undertaken at all.

Work of this character has already been undertaken in Maryland, Delaware, and Alabama, and requests are now on file for additional districts in North Carolina, South Carolina, Georgia, and Tennessee. These requests, coming as they do directly from the people through their representatives, will be met as far as the supply of funds and suitable experts will permit.

The work undertaken under this caption is divorced from investigation or experimentation, and consists chiefly in the practical application of results obtained by prior investigation. The success of this advisory work depends largely on the personnel of the force assigned to the field. Great care is being exercised in this particular to select for the various districts men who not only know the soils with which they will have to deal, but who also have a practical working knowledge of the agriculture common to the district. This knowledge, together with a strong liking for agriculture and a personality which will enable the man to meet and understand the people with whom he is to work, are the chief requisites to his success. When men suited to the various districts have been secured, it is the purpose to continue each man in a particular locality until he thoroughly masters the principal practical problems and is well and favorably known by the people of the district as an authority on soils and related problems. Naturally these men will be asked for help relative to farm problems outside of their specialty, and with which they may not have the knowledge to deal; but, knowing the Department of Agriculture as they should, they will be able to refer these problems to the proper Bureau for the desired information and help.

This class of work promises to be of great value as a means of acquainting farmers throughout the country not only with the work of the Bureau of Soils, but also with the work of the Department of Agriculture as a whole. It will serve to bring the Department into closer touch with the great farming industry and its problems, and open the way for the application of scientific facts that have been discovered as a result of research and investigation. So great is the demand for this popular work that provision should be made for a minimum of fifteen field parties for the coming year.

SOIL-TEST FARMS.

In addition to the popular and practical work, there is a demand for soil-test farms where the crop rotations, methods of tillage, and fertilizers and manures best suited to building up and maintaining soil fertility can be studied in detail for a long series of years. Such farms should be established in each of the great soil provinces. The soil province most urgently in need of such an experimental farm at present is that of the Coastal Plain. This embraces a vast expanse of low-lying land bordering on the Atlantic and Gulf coasts, the soils of which are devoted not only to the staple crops, cotton and tobacco, but produce the bulk of the truck and berry supply of our great eastern cities. It is the one great soil province in which the farmers depend largely upon commercial fertilizers as the chief means of increasing crop production. For this reason it is exceedingly desirable to establish in some parts of this region at the earliest possible date an experimental soil-test farm. The chief work on such a farm would be a study of fertilizers in relation to soil fertility, with special reference to the production of early truck and fruit crops.

SPECIAL PROBLEMS.

There are three special subjects that should be taken up during the present winter and next year. The first is a practical study of the fertilizer requirements of the soils of the principal trucking centers on the Coastal Plain region. Such a study should begin with the planting of the winter crops and be maintained through the growing and marketing season. Reliable information as to the fertilizer giving best results for the various soils and crops should be collected throughout the region and the same issued in bulletin form for practical use for the succeeding year. The second problem is a study of the adaptation of the soils in the vicinity of Chicago for a better local food supply, especially for the production of vegetables, berries, and other perishable supplies. This should embrace an area within not more than 100 miles from the city, and would fall in each of the four States of Illinois, Indiana, Michigan, and Wisconsin. A request for such work has already been received from authorities in the city of Chicago.

A third study is that of greenhouse soils, their adaptation and treatment for the highly specialized crops that are grown under glass in constantly increasing quantities in the proximity of all our large cities. This industry has increased enormously in recent years, and the census of 1900 showed $50,000,000 invested in the industry in the United States. There is a demand for better knowledge regarding the character of soil best suited to special greenhouse crops and the treatment that should be given. Provision should be made to commence work on each of these special problems during the coming year.

SOIL EROSION.

The work of this division relates primarily to the erosion of soils, and generally to the agency of water in connection with soils. An immediate practical consideration grows out of the waste of our soils through surface washing and leaching, not only under natural conditions, but also in consequence of imperfect agricultural methods. Losses incurred through surface washing are enormous and sometimes irreparable. The late Prof. N. S. Shaler estimated the destruction of agricultural lands, chiefly through old-field erosion in the South Atlantic and Gulf States alone, at several thousand square miles; and in portions of this region the waste involves a complete removal of a superficial geologic deposit (brown loam, loess, yellow loam, etc.), well adapted to forming a productive soil, from underlying older formations ill suited to the development of fertile soils and subsoils, in which case the loss is irremediable. Other estimates of soil waste rest on the determination of soil matter transported by our running waters. The most extensive measurements of this kind were those of Generals Humphreys and Abbot, made on the Mississippi over half a century ago. These showed that the Mississippi then carried annually into the Gulf something over 400,000,000 tons of solid matter, in addition to great quantities of earth salts carried in solution and of sand or other coarse material rolled or swept along the bottom. At the time of these determinations settlement in the Mississippi Valley was comparatively limited, and, as shown by local observations on

different rivers, the effect of extending agriculture has been to increase the soil matter carried by the Mississippi fully 25 per cent; while comparative determinations made on several other streams indicate that the rivers of the country outside of the Mississippi Basin carry into the sea about as much soil matter as the great river itself, i. e., that the annual soil wash of the United States aggregates fully 1,000,000,000 tons. A small fraction of the transported matter is coarse (sand, gravel, etc.), but fully 90 per cent consists of rich soil stuff washed from the surface or leached from the subsurface of fields and pastures and (in less degree) of woodlands. Reckoned on the basis of value as fertilizer, the material could hardly be appraised at less than $1 per ton, so that the annual loss to the agricultural interests of the country can hardly fall short of a billion dollars, equivalent to an impost greater than all other land taxes combined and one yielding absolutely no return. This enormous waste has already engaged the attention of the Bureau; but during the closing months of the fiscal year the matter has been taken up specially, with a view to extending measurements of the loss in typical districts, and, at the same time, advising and applying methods by which the waste may be reduced.

REPORT OF THE ENTOMOLOGIST.

U. S. DEPARTMENT OF AGRICULTURE,
BUREAU OF ENTOMOLOGY,
Washington, D. C., August 9, 1907.

SIR: I submit herewith an executive report covering the work of the Bureau of Entomology for the fiscal year ending June 30, 1907, dividing it, in accordance with your instructions, into the following headings:

(1) A summary of the important operations carried on during the fiscal year 1907.

(2) An outline of the plans proposed for work for the fiscal year 1908 under appropriations already made for that year.

(3) Suggestions as to work recommended for the fiscal year ending June 30, 1909, for use in preparing estimates.

Respectfully,

L. O. HOWARD,
Entomologist and Chief of Bureau.

Hon. JAMES WILSON, *Secretary.*

WORK OF THE YEAR.

The work of the Bureau during the year beginning July 1, 1906, and ending June 30, 1907, may be classified as follows:

(1) Work on the Mexican cotton boll weevil and other insects affecting cotton.
(2) Work on the gipsy moth and brown-tail moth.
(3) Importations of useful insects.
(4) Exportations of useful insects.
(5) Investigations of insects damaging forests.
(6) Investigations of insects damaging deciduous fruit trees.
(7) Field-crop insect investigations.
(8) Work on insects injurious to vegetable crops.
(9) White-fly investigations.
(10) Investigations of insects in their direct relation to the health of man and domestic animals.
(11) Work on scale insects.
(12) Work on insects injurious to stored products.
(13) Experimental work with insecticides.
(14) Investigations of insects affecting tobacco.
(15) Inspection work.

(16) Work in bee culture.
(17) Work in silk culture.
(18) Miscellaneous investigations, the exhibit at the Jamestown Exposition, and other work.

WORK ON THE MEXICAN COTTON BOLL WEEVIL AND OTHER INSECTS AFFECTING COTTON.

The work of the Bureau of Entomology on the cotton boll weevil was continued during the fiscal year 1907 under Mr. W. D. Hunter, to some extent along the lines of previous investigations, though new features that have an important bearing on practical control were given attention. In the case of a pest that causes an annual loss of about $25,000,000, falling upon a single industry restricted by climatic conditions to less than one-fourth of the area of the United States, it is evident that the very fullest knowledge of its life history and habits must be obtained and disseminated. Naturally, any means of control must be based upon this information. Partially successful means of control or means of use in restricted regions or under special conditions can not be considered as satisfactory. Continued efforts must be made until the best possible means of control are devised and tested in the field. The problem caused by the boll weevil is made more difficult and more work is required by the fact that the insect is adapting itself to new conditions and changing its habits in ways that interfere seriously with the present means of control. The work conducted by the Bureau of Entomology has been classified under the following heads.

EXPERIMENTAL FARMS.

As in the preceding year, the Bureau has conducted a number of large-scale field experiments. The experimental farms were of from 10 to 65 acres in extent and located in various regions where the weevil problem assumes local aspects. They were primarily of an experimental character, but incidentally of great value as practical demonstrations of the success that may be attained by following the recommendations that have been made by the Bureau. Careful studies and records were made and valuable practical information obtained. The season was abnormal and the necessity for the continuance of such work through a series of years in order to obtain exact information was again demonstrated. The experimental farms were located in the following counties in Texas: Robertson, Navarro, Travis, Dallas, Henderson, Karnes, Hunt, Bowie, Denton, Kerr, Wood, and Llano; and in the parishes of De Soto and Vernon, in Louisiana. Similar work was also conducted near Ardmore, in Indian Territory. The total area covered by these experiments was 378.5 acres. The work was arranged, as has been the case in the past, under a contract which gave the Department practically absolute control of all details. The total cost of this work to the Department was about $800.

In addition to the work under contracts, nearly 500 acres were utilized under a merely cooperative arrangement with farmers in many localities, without any expense whatever to the Department.

SPECIAL FIELD EXPERIMENTS.

In the last annual report attention was called to the necessity for a large-scale experiment in the fall destruction of cotton plants. This practice has been tested on a small scale in many localities and its efficiency has been demonstrated. Nevertheless, there are practical difficulties in the way of a general following of the practice by farmers, who have been slow to take it up. It was therefore decided to conduct a larger demonstration than had been possible in the past. To do so a locality was found in Calhoun and Jackson counties, in Texas, where 25 or more farmers had an aggregate of 410 acres of cotton. This locality was isolated completely from other cotton. On one side was the Gulf of Mexico, on another a broad arm of the Gulf, and on the remaining sides large stretches of swamp lands. The nearest cotton was about 10 miles distant. An agent of the Bureau of Entomology succeeded in inducing all the farmers in this locality to destroy the cotton stalks early in October. Their work was done under contract, which gave the Department authority to see that the work was done quickly and well. During the first ten days in October all of the cotton was uprooted and burned. Examinations that have been made this season show the very great importance of the work done during the preceding fall. Up to the present time (July, 1907) there has been virtually no weevil infestation in the area where the cotton was destroyed and where the same crop was planted this season under the usual conditions. In fact, for some time it appeared that the weevils had been absolutely exterminated. However, in June it was found that a very few of the insects had come from hibernating quarters in a hedge near one of the cotton fields. This resulted in an extremely slight local infestation. A large area of cotton growing across the bay, at a distance of about 15 miles, has been used as a check on the experiment. In the case of this check, the cotton stalks were not destroyed until December and January, which is the usual practice in that region. The plants were uprooted and destroyed only as an incidental step in the preparation of the land for planting. On this area in June an infestation of at least 50 per cent of the fruit on the plants was found. The prospects of making a crop are consequently very small, while on the experimental area it is scarcely possible that any conditions can now interfere with making a very large crop. The early destruction of the plants practically eliminated the boll weevil as a factor in cotton production for this season. In addition to the practical demonstration just referred to, a large amount of data was obtained from practical cotton growers in many localities who have practiced the fall destruction of plants. All of this information will be embodied in a special report that will be issued during the present season.

It has frequently been urged that it might be possible to control the boll weevil more effectively by late planting of cotton than by the early planting which has been recommended by the Bureau of Entomology, and which has come to be generally practiced. It has been supposed that the lengthening of the hibernation period by deferred planting rather than by the fall destruction of plants would be as effective as that process and much easier to place in operation on the average farm. In order to test this matter fully a number of

special field experiments was arranged. These experiments were located at four places in as many agricultural provinces in Texas and at one place in Louisiana. The latter work was done in cooperation with the Louisiana crop-pest commission. The results of these experiments have been referred to in an article in the Yearbook of the Department for 1906. In brief, the fallacy of late planting was proven beyond any possible doubt. In not one of the four cases in Texas was any appreciable amount of cotton produced. The plants grew well, but the boll weevil appeared in such numbers as to destroy practically all of the crop. The fields used were extremely isolated, and there could have been no invasion of weevils from outside. It is therefore certain that the insects may survive long enough to attack cotton planted as late as the middle of June and destroy it. This work is a complete refutation of the theory that has been proposed, and the publication of the results will undoubtedly prevent the useless expenditure of money by many farmers.

WORK ON THE CONTROL OF THE WEEVIL DURING THE HIBERNATION SEASON.

Many details connected with the proper procedure in the fall destruction of the cotton plants can only be determined by special field experimentation. One of these points is the approximate time in the fall when the work should be done. In order to obtain the necessary information the Bureau of Entomology conducted three large experiments at Victoria, Calvert, and Dallas, Tex. At each of these places large cages (20 by 50 feet) were erected over cotton growing in the fields. Each of these cages was divided into ten sections. Early in October the plants were removed from one of the sections at each of the places mentioned, while the weevils were allowed to remain. In order to make the results more satisfactory numbers of weevils collected in the field were placed in these sections immediately after the removal of the plants. In all, over 70.000 weevils were utilized. At regular intervals subsequent to the removal of the plants from the first cage, other sections were treated likewise. In the cage experiments, of course, accurate notes have been made regarding the number of weevils that have survived the winter. In this way it will be possible to determine exactly what benefit a farmer may obtain in southern, central, or northern Texas by the destruction of the cotton plants at various dates through the fall and winter. This work will give the farmers exact information as to what they may accomplish by the destruction of the plants at different times in the fall and will probably emphasize the supreme importance of the earliest possible destruction.

As has been the case in the past, a considerable fund was set aside by the Bureau of Entomology as a reserve to be used in the eradication of isolated colonies that may be expected at any time. With the increase in infested area and the proportionate increase in the amount of farm commodities shipped from it to regions where the boll weevil does not occur, the danger of the occurrence of isolated colonies has recently increased enormously. In one instance an isolated outbreak was completely eradicated by the Louisiana State authorities, and there is no reason why similar results might not be obtained in case, for instance, a colony should be found in South Carolina. If it were discovered in time energetic work would save hundreds of thousands of dollars to the State concerned.

WORK DIRECTED TOWARD THE PRACTICAL UTILIZATION OF THE PARASITES AND PREDACEOUS ENEMIES OF THE BOLL WEEVIL.

By all means the best method of controlling injurious insects is the encouragement of the natural checks provided for them—that is, parasites and predaceous enemies. Most conspicuous examples of effective entomological work have involved the use of this method. In the case of the boll weevil there are many difficulties. One of these is that the insect works within the tissues of the plant in all stages, except one, so that it is better protected from its enemies than many others. Another obstacle lies in the fact that the boll weevil is a new insect in the United States, having left behind the parasites that control it in its original home, and until very recently there has not been sufficient time for the native parasitic agencies to come into operation. An important line of work undertaken in the fiscal year 1907 was a careful study of this matter. It was first necessary to examine many thousands of squares and bolls from various localities in the infested area to determine what different parasites and predaceous insects were present in different quarters. It was also necessary, when parasites were found, to ascertain the source from which they came. This involved much careful investigation of insects related to the boll weevil infesting various plants growing in and about cotton fields. It was found that fifteen different insects which attack the boll weevil in its immature stages are now at work to a greater or lesser extent in the infested territory. The number is undoubtedly increasing, and will continue to do so as the boll weevil invades regions where parasites of other weevils are present. That the matter is not one of small importance at present is indicated by the fact that in a field near Waco, Tex., it was found that fully 40 per cent of the weevils had been killed by the combined work of several species of parasites.

Practical results of the work on parasites are already in sight. Among them may be mentioned the feasibility of the collection and propagation of parasites and their distribution in regions where the same species are either absent or present in but small numbers. In an experiment performed in the summer of 1906 a number of parasites were taken from Waco, Tex., and liberated in a cotton field near Dallas, Tex. Apparently by this means the mortality rate due to parasites was raised in a few weeks by about 9 per cent. Another practical point that has been brought out is that, by the elimination of weevils related to the boll weevil by the destruction of their food plants in or about cotton fields, the farmer may force the parasites to transfer their attention to the boll weevil. It was, of course, only after very careful studies of the weevils of various species occurring about cotton fields that the information necessary for this procedure could be obtained. Now, however, as a result of the work that has been done, it may be pointed out what plants are infested by weevils the parasites of which may attack the boll weevil and the exact time when these plants should be cut down. Other practical points and field tests remain to be undertaken.

The studies of the parasites of the boll weevil have brought to light many matters that have a general bearing on the control of injurious insects everywhere. The results obtained up to the present time have been submitted for publication in a bulletin which will shortly appear.

In addition to the parasites referred to in the preceding paragraphs, at least one very important predaceous enemy of the boll weevil has been found, namely, the native fire ant, *Solenopsis geminata*. This insect is not to be confused with the Guatemalan ant. It occurs throughout the cotton belt and has been found to be a very important factor in controlling the boll weevil in its original home in Central America. In this country it is rapidly acquiring a habit of feeding upon the boll weevil. In order to determine exactly what work is being done by this ant and the conditions most favorable for it, large numbers of squares were examined from cotton fields in various parts of Texas. The importance of the ant's work was clearly shown as a result of these examinations. At Beeville, Tex., for instance, in August, 1906, out of 874 weevil stages found, 684 had been destroyed by ants. The studies conducted showed the comparative effectiveness of control by the ant in various localities in Texas and Louisiana, and also the special conditions in any one locality which favored the work of the ant. Information of this kind in many cases can be made of practical use in the location and management of cotton fields. The whole matter will receive careful attention in a publication of the Department that is about to be issued.

MISCELLANEOUS WORK.

In addition to the principal lines of investigation referred to, considerable work has been necessary to determine the status of the boll weevil at different times. There is a constant and legitimate demand for information as to the probable damage by the pest, and reasonably safe predictions may be made from the field examinations early in the season, provided they can be extended over sufficient territory. During the fiscal year 1907 several general examinations were made. These involved the work of eight or ten entomologists for about ten days' time. The first examination was made in June, and the results which were published indicated clearly that the damage to be expected from the boll weevil during the year would be much less than normal. This prediction was verified later by the very large crops produced in the infested territory.

There is also great demand for information regarding the additional territory that becomes infested by the boll weevil from time to time. To supply this information men were placed in the field to determine the exact extent of the dispersion of the insect, and the results were expeditiously published in the form of maps.

As in preceding years, a number of preparations designed to destroy the boll weevil were tested at the laboratory at Dallas. Many mechanical devices were also investigated. This line of work is absolutely necessary to refute the claims of overenthusiastic persons and thereby to prevent the useless expenditure of money by farmers. Many addresses were delivered at meetings of farmers, and many special articles were written for agricultural papers on matters of local or general concern. As usual, a large amount of information was disseminated through correspondence.

The work in cooperation with State experiment stations was continued. One man was detailed to the Texas experiment station and three were detailed to the crop-pest commission, which is virtually a part of the experiment station organized in Louisiana.

WORK ON THE COTTON BOLLWORM AND OTHER COTTON INSECTS.

The bill appropriating for the expenses of the Department of Agriculture for the fiscal year 1907, in its emergency appropriations, did not contain the same specific mention of the cotton bollworm as did that of the previous year, and in fact the work of the previous year had practically completed the investigation. Seven demonstration experiments, however, were carried on, based upon the information gained by the work of the previous years—five in Texas and two in Louisiana. The results of the entire work have been carefully summed up in Farmers' Bulletin No. 290, and it seems obvious that by following carefully the recommendations given in that bulletin cotton planters can reasonably expect to escape serious damage by this destructive insect.

The incidental work on other cotton insects has also been carried on in cooperation with the Texas State Agricultural Experiment Station. An assistant has been stationed at the State college, as in the previous year, carrying on certain experimental work with the cotton insects of minor importance, and particularly with the cotton aphis, as indicated in the last report.

WORK ON THE GIPSY MOTH AND BROWN-TAIL MOTH.

As indicated in the last annual report, under the head of "Proposed work for the fiscal year 1907," headquarters for this work were established in Boston; Mr. D. M. Rogers was placed in charge of the work, a large force of laborers was engaged, and energetic work was begun immediately when the appropriation became available. Under the terms of the appropriation, the efforts of the Bureau have been directed toward preventing the further spread of the gipsy moth and the brown-tail moth. As previously shown, there is a radical difference in the possibilities of effective work to prevent the spread of these two insects. The brown-tail moth is a ready flier, and at the time the work began had already covered a great extent of territory, reaching from Amherst, Mass., to a point high up on the Maine coast. At the time of its annual flight it is carried by prevailing winds, often for hundreds of miles from its place of birth, and an effort to prevent its spread seems almost hopeless except by the active cooperation of every property holder in the infested territory. The campaign against this insect has therefore been begun as an educational campaign, and the importance of local effort has been shown as forcibly as possible. An illustrated farmers' bulletin has been published and distributed widely throughout the infested territory, and State and local officials have been urged to do everything in their power to induce the destruction of the winter nests. The States of Maine, Connecticut, Rhode Island, and New Hampshire, in addition to the State of Massachusetts, have passed laws based upon the Massachusetts law and have made appropriations for State work. While these appropriation laws include the gipsy moth with the brown-tail moth, the brown-tail moth is receiving from the outlying States perhaps more attention than the gipsy moth.

The conditions are quite different with the gipsy moth. The female can not fly, and the species is distributed by the caterpillars, which, spinning down from trees overhanging the roadsides, are

carried long distances by automobiles, carriages, trolley cars, and other vehicles, and shorter distances by pedestrians. The species was known to occur, at the time when work was begun, in a rather definitely restricted region, including the eastern portion of Massachusetts, one locality in Rhode Island, one in Connecticut, and several in the southeastern portion of New Hampshire. Within this territory the caterpillars were to be found in the forest land, in public parks, in orchards, and upon the street trees of cities and roadside trees in the country. Two methods of work were obvious—one to work upon the outer border of the infested territory and gradually retract the line of spread toward the center. This method, however, was deemed inadvisable for the reason that the principal spread is surely from the interior to new points beyond the line by means of vehicles, as just indicated. Therefore the second method was adopted, which consists in working along the thoroughfares leading from the most seriously infested localities, and this work was prosecuted in the summer time and autumn months of 1906. A strip of about 100 feet wide on each side of the road was cleared up; all underbrush was cut out; poor trees were removed, and the remaining ones were pruned; all débris was burned. Such work has been done during the year in Malden, Melrose, Saugus, Wakefield, Lynnfield, Peabody, Woburn, Lexington, Burlington, Waltham, and Belmont—in all about 65 miles of road, 100 feet on each side.

In the fall of 1906, after the gipsy moth had deposited its eggs, selected men were taken from the force and sent over the 100-foot strips, treating all egg clusters with creosote oil. This work was continued until May, 1907, when the eggs began to hatch. During the latter part of April and the first part of May the trunks of the trees in all of these strips were banded with sticky bands to prevent the ascent of caterpillars which might have hatched from broken egg clusters or which might come from the territory back of the 100-foot strips. The same trees were also banded with strips of burlap above the sticky bands, so that such caterpillars as might hatch in the trees above the bands could be caught in the burlap hiding places.

About the first of June spraying operations were begun. Four spraying machines operated by gasoline engines were used, and the spray consisted of arsenate of lead in the proportion of 10 pounds of poison to 100 gallons of water. This spraying continued until the close of the fiscal year and later.

The work was done entirely in the State of Massachusetts, since outlying colonies have all been shown to have originated from the section included in this work. But in addition to the Massachusetts work, an arrangement was made with the authorities of Rhode Island whereby the force of men employed by that State, on the lapsing of the Rhode Island appropriations, was transferred to the Bureau on July 23, 1906. These men were kept at work until May 15, 1907, and on the passage of the Rhode Island appropriation bill were retransferred to State authority on May 16. This force examined every tree and most of the shrubbery and thousands of buildings and fences in the city of Providence, destroyed all the gipsy-moth egg clusters that could be found, treated all trees having cavities which could be used as hiding places for the caterpillars, located the egg clusters, and cleaned up all around the infested places in Cranston, Johnston, North Providence, East Providence, Pawtucket, and

Barrington. The work was so well done that it is difficult at this date of writing to find a gipsy-moth caterpillar in the State. At the beginning of the work the gipsy moth was thought to be confined to the city of Providence, but as it progressed it was found in the six additional localities above mentioned. Some scouting was done in northeastern and southern Rhode Island, but no gipsy moths were found; the brown-tail moth, however, was discovered in Woonsocket, Cumberland, Central Falls, and Pawtucket.

A small gang of men was sent to Connecticut March 20, 1907, to scout in the territory about the gipsy-moth colony at Stonington. A thorough examination was made of this town and some scouting was done in the towns of Groton and North Stonington, but no insects were found except in the immediate vicinity of the territory already known to be infested, which is about 1 square mile in area and is being cared for by the State.

Early in the fall of 1906 scouting operations were begun in New Hampshire, at the southeastern corner of the State, where the gipsy moth had been discovered the previous year. This scouting was continued until June 30, 1907, and the gipsy moth was discovered in 35 of the 77 towns that were inspected.

In November, 1906, scouting was begun in Maine, and was continued until May 25, 1907. Thirty-five cities and towns were examined, and the gipsy moth was discovered in eight. With the exception of a single egg cluster found at the Soldiers' Home at Togus, Chelsea, Me., the known infestation is confined to the extreme southwestern portions of the State, in the towns of Kennebunkport, Kennebunk, Wells, York, Kittery, Eliot, and South Berwick.

As above stated, all of the New England States in which the gipsy moth is known to occur have appropriated funds and have enacted laws directed toward the gipsy moth and the brown-tail moth during the past winter. Maine appropriated $30,000 for 1907 and $30,000 for 1908; New Hampshire appropriated $25,000 for the two years 1907 and 1908; Rhode Island and Connecticut each appropriated $10,000, or so much thereof as may be necessary.

The laws of the infested States, if enforced, will probably be effective in keeping the pest in check in the residential sections, but the forest lands will suffer greatly unless sufficient appropriations can be secured to care for them, or unless the parasites imported from Europe, which will be mentioned in a later section of this report, multiply sufficiently to reduce the insects to a minimum in such sections.

The work that has been done under the auspices of the Bureau has been careful and thoroughly effective. The experienced superintendent of the Massachusetts State work, Mr. Kirkland, states that he has never seen more careful and thorough work done.

IMPORTATIONS OF USEFUL INSECTS.

The work of the Bureau in importing useful insects has been devoted almost entirely to continuing the importation of parasites of the gipsy moth and the brown-tail moth. During the early part of the fiscal year packages containing parasitized caterpillars of both species continued to be received from European agents. These

were cared for, as stated in the last report, in the laboratory at North Saugus, Mass. Parasites of a large number of species were reared; some were liberated in the open, and others were studied in confinement in larger or smaller breeding cages. Following the experience of the previous winter, when good results were obtained by the importation of large numbers of the hibernating nests of the brown-tail moth, from which in the early summer were reared parasites belonging to species which infest both the gipsy moth and the brown-tail moth, during the winter of 1906–7 more than 111,000 hibernating nests of the brown-tail moth were brought over from different portions of the European range of this species. These were placed in specially constructed cages, and from them large numbers of parasites were reared. They issued mainly during the month of May. As it happened, the month of May in New England, as well as in other parts of the United States, was phenomenally cold and wet. As a result of this unlooked for condition very many of the parasites refused to leave the nests until they were so weakened as to be unable to survive the close confinement and careful scrutiny to which they were necessarily subjected in order to eliminate the danger of introducing secondary parasites. As a result a smaller number of this group of parasites (Pteromalus) was colonized than in the summer of 1906, but 40,000 specimens were put out in several localities, the principal colonies consisting, respectively, of 13,000, 11,000, and 7,000 individuals.

In this important work with the introduced hibernating nests of the brown-tail moth it was early found most difficult to preserve the health of the laboratory assistants. The irritating and poisonous hairs of the brown-tail moth larvæ, of which the nests are full, soon penetrated the skin of the assistants handling them, entered their eyes and their throats, and the atmosphere of the laboratory became almost filled with them. It was necessary that the laboratory rooms should be kept thoroughly closed; double windows and screens were used, and the doors to the rooms were darkened in order that a possible secondary parasite becoming accidentally liberated should have no chance of escape. This made the rooms very warm and increased the irritating effect of the larval hairs. Some of the assistants employed could not stand the work and resigned. One of the best and most experienced was induced to continue the present year only upon promise that he should be relieved from this especial class of work. Spectacles, gloves, masks, and even headpieces were invented to avoid this difficulty, but these, while greatly increasing the suffering from heat, were not entirely effective. The most serious result of this trouble was the breaking down in health of Mr. E. S. G. Titus, in charge of the laboratory, who was obliged to resign in May, 1907, on his physician's advice, in order to save his life. The difficulty in Mr. Titus's case was the intense irritation to his lungs from the entrance of the barbed hairs. Mr. W. F. Fiske was sent from Washington to replace him, and has since had charge of the laboratory. New methods of handling the brown-tail nests have been invented, and it is hoped that this difficulty will be measurably obviated in the future.

The Chief of the Bureau visited Europe again during May and June, 1907, engaging new voluntary assistants among European entomologists and establishing a very effective corps of observers in Russia, a country which has not before been called upon. At Kief,

Kishenef (Bessarabia), and Simferopol (Crimea) stations were established and much good and new material has been sent in. At Kief a large experimental orchard was engaged for scientific observations and for the purpose of collecting and caring for parasitized larvæ in large numbers. New collections were made in Germany, and an experimental station was established near Rennes, in France. Observers in many parts of Europe were found who have taken a deep and enthusiastic interest in the experiment, and as a result of the trip so much material has been received at the North Saugus laboratory as to demand a great extension of laboratory space.

Especial efforts were made during the late spring and early summer of 1907 to arrange for the importation of larger numbers of the egg parasites of both species, and to introduce in living condition the important parasites of the genus Apanteles, which, according to the writer's field observations, are among the most important of the European enemies of the gipsy moth. Previous importations of these parasites had failed, owing to the fact that the parasites emerged and died on the journey. The present year, however, specific directions were given to agents to send in young larvæ of the second age, and by this means living specimens of the parasites in considerable numbers have been reared at North Saugus. These on issuing laid their eggs in the gipsy-moth larvæ in their first stage. From these caterpillars were secured the cocoons and adults of a second generation, which was reared through all of its stages on American soil. It is hoped to repeat this experience on a more extensive scale next year, and thus to secure a very large number of the adult parasites for colonization.

Moreover, the important experiment has been tried this summer of rearing from the imported brown-tail nests a very large number of caterpillars which gave out in their later growth a second lot of parasites entirely different from those reared in May from the very young hibernating larvæ. Among these were at least two species of the important parasites of the genus Apanteles.

Another important result of the work of the early summer is the rearing from imported brown-tail nests of a parasite of the genus Meteorus. From the larger caterpillars a second generation has been reared after a very brief interval, the cocoons appearing in about ten days in cages in which the adult parasites were confined with their host insects. This indicates a very short breeding period during the summer time, and although this parasite has not been reared in great numbers its quick breeding indicates that it is a very desirable introduction. Probably the same species was occasionally found in boxes in which the nearly mature brown-tail caterpillars were shipped, and a few emerged from some of these caterpillars, which arrived alive and in apparently a healthy condition. After the parasite emerges the larger caterpillars seem as though they were not fatally affected by the work of the parasitic larva, but all have died without transforming. The species of this genus Meteorus on occasion may become very effective; a native species, for example, has been known to destroy 90 per cent of the larvæ of a native moth infesting the western pines.

In addition to the sending of brown-tail hibernating nests above referred to, during the fiscal year ending June 30, 1907, there was received from Europe a total of 1,375 boxes containing the matured

caterpillars and pupæ of the gipsy moth and the brown-tail moth. Of these, 872 boxes of the brown-tail were received during June, 1907, and 82 of the brown-tail and 425 of the gipsy during July and August, 1906. The percentage of parasitism varies considerably, according to the different localities from which the nests were sent, but it must be remembered that in these European localities the percentage of parasitism is constantly fluctuating, being smaller in some years and almost exterminative in others. A part of the parasites sent over do not emerge from the caterpillars or pupæ until after they arrive at North Saugus; others are found in the boxes in the pupal condition, and a few, especially toward the latter part of the season of sending, transform into adults and die on the journey.

Of these parasites, about 90 per cent have been tachinid flies, and perhaps 12 species have been reared from the two host insects, most of them being common enemies of both species. About 40 per cent of these flies emerge as adults at nearly the time of the emergence of the moths of the species which they attack, while the remainder pass the winter in the pupal condition, emerging the following spring. Seventeen hundred adult tachinids were colonized in July and August, 1906, and more than 2,000 during June, 1907. It is now obvious that a very large number will be on hand hibernating during the winter of 1907–8, and the problem of caring for them is a serious one. They are considerably parasitized by hymenopterous, secondary parasites, so that it will be necessary to keep them well protected, at the same time under conditions as near the normal as possible. At the close of the fiscal year between 6,000 and 7,000 puparia were already on hand. With one of the smaller species of tachinids breeding experiments were very successful, and the species reproduced freely under these conditions, indicating that it will be the part of economy to handle it in this manner, liberating only after having bred large numbers.

The large predatory beetles of the genus Calosoma, referred to in previous reports, have been successfully introduced in considerable numbers. *Calosoma sycophanta* was discovered in several of the field colonies in the spring of 1907, having established itself, survived the winter, and reproduced. It is a valuable importation, but whether it will prove in itself sufficient to reduce the numbers of the gipsy moth and the brown-tail moth to an appreciable extent is undetermined.

In the report for last year the writer drew particular attention to two species of the genus Pteromalus, small parasites of the superfamily Chalcidoidea. Some 60,000 were reared in the early summer of 1906, and the great majority of them were liberated. That the species has established itself, at least temporarily, has been shown by the fact that specimens were bred in the spring of 1907 from nests collected in colonies of the year before. Throughout a considerable portion of the territory directly north of Boston, within which all of the larger colonies were planted last year, the caterpillars of the brown-tail moth died very generally from a fungous disease, and as a result there was a scarcity of the hibernating nests. Therefore, it was not considered desirable to collect for breeding purposes many of these nests, and it is confidently expected that the species will be found more abundantly in the collections of nests made next winter.

Several new colonies have been planted in quite widely separated localities.

The difficulty of determining the exact names of these European parasites, nearly all of which are very common members of the European fauna, is scarcely to be believed. The two species of Pteromalus, for example, mentioned in the last report have been a source of great difficulty. The writer was unable to find them represented in the large museums at Vienna, Dresden, Berlin, Brussels, and London, nor did they occur in the type collections of Ratzeburg at Eberswalde, where, on account of that writer's important work on the parasites of European forest insects, one would naturally expect to find them. At last, in the Museum of Natural History in the Jardin des Plantes at Paris, specimens of both species were found that had been reared many years ago by the French entomologist Sichel and had been named for him by the eminent authority on parasites, Arnold Foerster, of Germany. They will, therefore, in the future be known definitely as *Pteromalus nidulans* Foerst. and *Pteromalus egregius* Foerst.

OTHER IMPORTATIONS.

What may prove to be an important egg parasite of the imported elm leaf-beetle has been discovered in France, and through the courtesy of two French correspondents, Dr. Paul Marchal, of Paris, and Mr. Ch. Debreuil, of Melun, egg-masses were sent to this country in the hope of establishing the parasite on this side of the ocean. Both sendings, however, were started too late in the year, and the parasites issued during the journey, dying before they could be liberated.

As happened last year, several species of European Coccinellidæ, beneficial in habit, were imported and liberated in the vicinity of the parasite laboratory at North Saugus, Mass. No progress is to be reported in regard to the older importations, the status being practically that of a year ago. During the last European trip of the Chief of the Bureau, arrangements were made for the importation of the European enemies of the codling moth, and these should begin to arrive the coming autumn.

EXPORTATIONS OF USEFUL INSECTS.

The official entomologists of European countries have been so helpful to the United States Department of Agriculture in assisting in the various importations of beneficial insects from abroad, and especially in the work on European parasites of the gipsy moth and brown-tail moth, in all cases refusing material compensation, that it is a pleasure for the Bureau to find that it can be of assistance in the way of return favors of like character. During the past year various exportations of certain important parasites of *Diaspis lanatus*, an injurious scale-insect found upon peach, cherry, pear, lilac, and other trees and bushes in the United States, but which is much more injurious in southern Europe, where it attacks the mulberry upon which the prosperity of the silk industry depends, have been made to Italy, where they have been received and cared for by Prof.

Antonio Berlese of the Royal Station for Agricultural Entomology at Florence, and by Prof. F. Silvestri at Portici. Several species of these parasites have been bred in Italy, and it is the expectation of our Italian correspondents that they will be of assistance in holding the mulberry scale in check.

An even more interesting experiment of this sort has been entered into in order to assist the French Government to stamp out a dangerous disease of the dromedary in Algeria. The disease in question is caused by a trypanosome inhabiting the blood, and it is conveyed by tabanid flies. The natural enemies of the tabanid flies in Algeria are not effective, owing to a decidedly diverse period of abundance in the two forms. The United States Department of Agriculture has therefore been appealed to for advice in regard to the sending of American species inimical to the tabanids, which may possibly develop in Algeria in such a way as to control the disease-carrying species. Efforts were made toward the close of the fiscal year to send to France for immediate transportation to Algeria large shipments of *Monedula carolina*, a sand-digging wasp common in the Southern States and which is an effective enemy of American tabanids.

INVESTIGATIONS OF INSECTS DAMAGING FORESTS.

The work on forest insects carried on under the supervision of Doctor Hopkins, the entomologist in charge, has been largely in the line of continued work on the projects mentioned in previous reports. Very satisfactory progress has been made, both in acquiring and diffusing information of practical value to the forest interests of the country.

WORK ON THE INSECTS THAT PREVENT FOREST REPRODUCTION.

It was found that the principal damage by insects to forest reproduction is caused by certain scolytid beetles which bore into the new cones of the western yellow and other pines and prevent the normal development of the cone seeds. Certain caterpillars belonging to different genera are also found to destroy the new cones or the seed in the old cones of pine and fir; and certain seed parasites of the genus Megastigmus often cause an entire failure of the seed crop of the Douglas fir, the balsam fir, and other species. The combined depredations of these insects frequently destroy the seed crop and prevent natural reproduction. There are also numerous enemies of the saplings, including the destructive white-pine weevils, which contribute to the failure of young growth to replace the old. Much has been learned concerning the life histories of these insects, and some of the results have been published in Circular No. 90 of the Bureau and elsewhere.

WORK ON INSECTS INJURIOUS TO FOREST PRODUCTS.

The lumbermen and manufacturers in this country, and the consumers in other countries, of certain export material, have shown a great deal of interest in recent years in an insect injurious to crude, manufactured, and finished products. Especial attention has been drawn to the insects affecting seasoned stored and finished hardwood material and the woodwork in dwellings and other buildings. These injuries are caused by a class of insects called powder-post

beetles and are very severe. During the year data have accumulated concerning the habits and life histories of these insects, and much has been accomplished toward the determination and practical application of successful methods of control. These involve the proper management of the material to prevent injury, the destruction of worthless infested material at the proper time to destroy the insects, and the proper and liberal use of pure kerosene both as a destructive and preventive agent—all of which, however, must be adjusted to meet the requirements of the different kinds of wood, classes of material, and species of insects involved. Circular No. 55 gives some preliminary information on the subject, and a special bulletin will be published as soon as some of the important details of the work have been completed.

WORK ON INSECTS OF THE BLACK HILLS NATIONAL FOREST.

The work on insects of the Black Hills National Forest was continued during the season of 1906 mainly in completing the study of the seasonal history and habits of the Black Hills beetle and observations on the extension of its ravages; also in the testing of a recently invented tool for the removal of infested bark from standing timber.

Methods had already been recommended by the Bureau to the Forest Service for the control of the ravages of the beetle. These measures would have been effective if carried out. The depredations, however, had extended over such a wide area and such a large proportion of the material was infested that at least 200 men, working several months, would have been required and a much larger expenditure of money, in addition to that derived from sales of timber, than was practicable with the available force and funds at the disposal of the Forest Service; therefore the work was stopped. Unless the necessary radical and rather expensive methods now required are adopted, it seems useless to expend the small amount of money available; and unless some natural enemy appears within the next year or unless radical artificial measures can be adopted at once, practically all of the merchantable timber of the entire forest will be destroyed.

WORK ON BENEFICIAL FOREST INSECTS.

A thorough study has been made of the natural enemies of forest insects and a large amount of material has been brought together; interesting and important facts have been ascertained concerning their life history and the possibility of their practical use. The knowledge of this phase of the subject has advanced to a stage where much of important practical value is available for immediate utilization in the introduction of natural enemies or in the adjustment of forest management and business methods for the protection and promotion of these natural enemies.

OTHER WORK.

Studies have been made on the relations of environment to injury to forest trees by insects, such, for instance, as the relation of storm-felled trees to multiplication of the insects; the relation of soil and climate to insect depredations, and the relation of drought to the

same subject. The relations of insects and forest fires in the destruction of forests has also claimed especial attention. The contributing of insect-killed timber to the starting and spread of forest fires is an important subject, and studies made indicate that the damage attributed to fire alone may be directly chargeable to insects, although not necessarily in all cases.

A great deal of work has been done on the bark weevils of the genus Pissodes; on insects affecting hickory and ash; on insects affecting the black locust; and in the forests of the Northwest, the Pacific coast, the Southwest, the northern section of the Rocky Mountains, as well as in the South and East, special insects have been studied and special problems have been under the observation of field agents. In cooperation with the Forest Service, special explorations have been made of National Forests and private forests, the knowledge possessed by forest rangers being utilized in a number of instances.

Systematic and economic studies of special groups of forest insects have been begun and carried on, and during the winter time field assistants returning to Washington have been engaged in the systematic investigation of problems relating to such special groups of insects.

INVESTIGATIONS OF INSECTS DAMAGING DECIDUOUS FRUIT TREES.

The work on insects damaging deciduous fruit trees has been in the main a continuation of the investigations already in progress at the close of the last fiscal year, though additional projects have been undertaken, and the tests of the lime-sulphur washes and other insecticides for the San Jose scale have been concluded.

FIELD STATIONS.

The plan of maintaining field stations in parts of the country devoted to the growing on a large scale of deciduous fruits has proved to be a most excellent one, and in this way it has become possible thoroughly to study under perfectly normal conditions the insects which are under investigation, and to conduct tests of remedies on a commercial scale. The work at the respective field stations in the study of a given insect pest and in tests of insecticides, so far as is possible, is carried out according to a uniform plan, so that the results are entirely comparable and calculated to show any variations in the life and habits of the species and what changes, if any, should be made in the use of remedies on account of climate, location, etc.

The field station at North East, Pa., has been continued and two additional men have been assigned to assist the field agent in immediate charge. This increase in force became necessary on account of taking up additional work with certain grape insects to be presently mentioned.

The field station which was maintained during 1906 at Myrtle, Ga., for the study of peach insects was discontinued at the close of the growing season for that year, and the agent there located was transferred in the spring of 1907 to Olden, Mo., to continue investigation of peach insects in the peach-growing regions of the Ozarks.

The field station at Nebraska City, Nebr., for codling-moth experimental work, maintained during 1906, was also transferred to Olden,

Mo., in the spring of 1907, where better facilities are afforded for work on this insect by reason of a larger and more convenient orchard acreage. The uniting of the two lines of work at Olden also resulted in a more complete equipment of the laboratory and of spraying apparatus.

Demonstration spraying in the control of codling moth and apple diseases in cooperation, as during the last calendar year, with the Bureau of Plant Industry of this Department, was begun in the spring of 1907 in southeastern Nebraska and in the Ozark regions of Missouri and Arkansas and in Virginia.

The practically complete destruction of the fruit crop in Nebraska and Missouri by late spring frosts after the work was well under way necessitated an immediate change of plans, and the codling moth experimental work for the Middle West was transferred to Siloam Springs, Ark., where a sufficient apple crop was found. The peach insect investigations in the Ozarks were, on account of the lack of fruit, abandoned. A temporary field station has been located in southern Ohio, where important observations have been made on various deciduous fruit pests.

CODLING MOTH INVESTIGATIONS.

The experimental work on the codling moth, beginning May 1, 1906, at Nebraska City, Nebr., was continued to the close of that season, and embraced a thorough life-history study of the insect for that section, and the spraying of a series of plats to show the relative value in controlling the insect of from one to six applications of spray made at various times during the season. The codling moth investigation has been continued, beginning with the spring of 1907, along about the same lines as for 1906, though considerably extended. A detailed life-history study of the insect and investigations of its parasites, etc., with tests of sprays designed to show the number and times of applications which may be most effective, are under way. The transfer of work to Siloam Springs, Ark., on account of the destruction of the fruit crop at Olden, Mo., will not, it is believed, seriously impair the investigations planned.

This insect is also being investigated at the northern field station at North East, Pa., along approximately the same lines as in the South, and also in the vicinity of Washington, representing a more central latitude. This species will also be made the subject of special investigations, beginning the first of the fiscal year 1907-8, on the Pacific coast, as explained under plans for that year.

In addition to the purely experimental work on this insect above indicated, this Bureau, in cooperation with the Bureau of Plant Industry, is carrying out demonstration sprayings in control of the codling moth and apple diseases. This work, under way at the close of the last fiscal year, was continued during the remainder of the season of 1906, and included spraying apple orchards on a commercial scale in several localities in southeastern Nebraska, in Missouri, and Arkansas, the principal results of which have been published in Farmers' Bulletin 283. The work in general resulted in a much greater reduction of losses from codling moth than the growers in these respective sections were accustomed to obtain, and also has

resulted in a great improvement in the methods of preparing and applying sprays on the part of orchardists.

The demonstration spraying planned for the spring of 1907 for the Middle West was much modified on account of the loss of the fruit crop in southeastern Nebraska and Missouri, and the work has been restricted to several points in Arkansas. Similar work, however, is being done in one locality in Virginia, in southern Ohio, and also at North East, Pa. These necessary changes of location in the Middle West interfered with the timely application of the first one or two sprays, but it is hoped that the final results will not be seriously modified.

PLUM CURCULIO INVESTIGATIONS.

Next to the codling moth, this small snout beetle is perhaps the most serious of the insects injuring deciduous fruits in the United States, attacking principally plums, peaches, and apples, causing in the aggregate losses of several millions of dollars each year. This species has been under investigation the past two years, especially as an enemy of peaches, the work being conducted at the different field stations and at Washington, but particularly in the Fort Valley section in Georgia, where it is a very important pest of the peach crop. The transfer of the southern station from Georgia, where it had been maintained for two years, to the peach region of the Ozarks, as previously explained, was effected in the spring of 1907, and the work was well begun when the loss of the crop in this section made it necessary to abandon the work for the present. The practical destruction of the peach crop in the orchards available in the vicinity of Washington has also prevented the carrying out of the study of this insect as planned. This project, which it was hoped could be concluded by the close of the growing season of 1907, should be continued another season.

PEACH BORER INVESTIGATIONS.

The life history of the peach borer has now been quite fully investigated in the South Atlantic States (Georgia), the Middle Atlantic States (Maryland and Virginia), and the Northern States (western New York and northwestern Pennsylvania), and the period of emergence and oviposition of the moths determined. Similar studies are now being made in Texas, Arkansas, and southern Ohio, the work in Texas being in cooperation with the entomologist of the Texas Agricultural Experiment Station. These studies have shown important differences in the times of appearance of moths in the respective sections and forcibly illustrate the desirability of studying according to uniform plan the same species in different parts of the country. When similar data shall have been secured for the more central of the middle Western States, it is believed that it will be practicable to indicate quite exactly for all parts of the United States covered by its distribution the best period to apply washes and other remedial measures. Along with the life-history studies of this species has gone the testing of numerous washes and other methods likely to be valuable in protecting trees from its ravages. To be reliable, however, and to determine possible injury from their application to the trees, conclusions as to the efficacy of washes must be based on several years' tests.

SAN JOSE SCALE INVESTIGATIONS.

Work with the San Jose scale has been confined to further tests of various formulas for the lime-sulphur wash, to determine an efficient and economical formula which may properly be recommended for adoption as a standard, as well as many other points connected with its preparation and use. This work was concluded in the fall of 1907 and a formula has been decided upon as best for recommendation, namely, lime 20 pounds, sulphur 15 pounds, water to make 50 gallons, and cooked for one hour. The more important conclusions are included in an article on "Lime-sulphur washes for the San Jose scale," in the Yearbook for 1906, and a more detailed report is now in the course of preparation.

These tests, made in widely separated localities, show that in general a wash properly made and applied is equally effective in all latitudes in the Eastern States and constitutes a cheap and efficient treatment for this pest, which but a few years ago seriously threatened the fruit-growing industry in the East.

Other scalecides have been tried, including the principal proprietary preparations, such as the so-called miscible oils, and some attention has been given to devising washes less troublesome to prepare than is the lime-sulphur spray; but thus far nothing has been found so effective or cheap as the well-made lime-sulphur wash.

The investigation of numerous practical chemical questions concerning the lime-sulphur wash, undertaken in cooperation with the Bureau of Chemistry, has been concluded and reported upon by Mr. J. K. Haywood, in Bulletin No. 101, of the Bureau of Chemistry.

OTHER WORK.

The testing of various arsenicals on peach foliage, alluded to in the report of last year under the head of "Plum Curculio Investigations," indicated the need of further investigations along this line, and a more extensive study has been undertaken in cooperation with the Bureau of Chemistry, tests being made especially of arsenate of lead and the ingredients used in the preparation of the same to determine if possible the conditions under which injury to the fruit and foliage of the peach is likely to occur, and how if possible this may be avoided. Thus far there is no arsenical or effective poison which it is safe to recommend unqualifiedly for spraying peach trees, and such a preparation is greatly to be desired for the control of the plum curculio.

During the past two years a small moth (*Enarmonia prunivora* Walsh) has frequently been bred from apples from various parts of the country, and an investigation of the habits of the larva shows that in many respects these are quite similar to those of the codling moth; it infests the blossom end of the apple, and the second brood especially eats out patches and burrows on the side and in the blossom end of the fruit, greatly disfiguring it. From the observations already made it is certain that the larva of this species and its work have been mostly confused by entomologists and others in the United States with the larva of the codling moth and its work. This insect must therefore be added to the list of those injuring the fruit of the apple in the United States. A careful study of the species is now being made. It appears probable that the measures effective in controlling the codling moth will also keep this species in check.

The demonstration work in canker-worm control mentioned in the last report has been concluded and a report prepared. An investigation of a lepidopterous borer (*Synanthedon pictipes* G.& R.) of the peach and other plants, heretofore mostly confused with the true peach borer, has been concluded and the manuscript prepared for publication.

FIELD-CROP INSECT INVESTIGATIONS.

The work on field-crop insects, under the especial charge of Prof. F. M. Webster, was continued during the past fiscal year with excellent results. Field work was devoted to the carrying on of the Hessian-fly and joint-worm investigations of the previous year, and owing to a serious outbreak of a grain aphis in the Southwest in the spring of 1907 the investigation of this last insect assumed great importance.

HESSIAN-FLY INVESTIGATIONS.

The wheat-sowing experiments indicated in previous reports were increased during the year in cooperation with the New York, Pennsylvania, and Tennessee experiment stations. These sowings, now numbering over 800, are being carried on at present in eleven States. Exact data are being continually accumulated, showing that it is possible to evade the most serious portion of the fall attack of the fly by seasonably late sowing in the fall. These experimental sowings, which are carried out almost exclusively by the very best farmers, are veritable object lessons, are attracting much attention, and are carefully watched by the farmers throughout the sections where the experiments are conducted.

Work on the Hessian fly in the spring-wheat sections has been continued, and last year's results have been verified. Many new facts have been secured regarding the life of the pest in this new region, and the chief parasite—a Polygnotus—has been followed through its life round. The possibility of the practical use of this parasite has been shown in two interesting cases. Early sown plats at Lansing, Mich., and Marion, Pa., were very seriously attacked by the Hessian fly, but when examined carefully at a later date fully 90 per cent of the "flaxseeds" (pupæ) were found to have been stung by Polygnotus and to contain its developing larvæ. A field of wheat near Sharpsburg, Md., was found to be infested by the fly, and examination indicated the absence of the parasite. On April 8 a large number of the parasitized "flaxseeds" from Marion, Pa., were brought to Sharpsburg and placed in the field. On July 8 an examination of the Sharpsburg field showed that the parasites had taken hold to such an extent that of the large number of "flaxseeds" taken and brought to the laboratory for investigation not one was found which had not been parasitized. Careful observations of the habits of this parasite in Kentucky, Tennessee, and Alabama have been made, and the observations and collections made in the autumn of 1906 in western Kentucky and northern Alabama have been of material aid.

INVESTIGATIONS OF THE SO-CALLED "GREEN BUG."

The insect known to the farmers in the Southwest as the "green bug" is really an aphis known as *Toxoptera graminum*. It occasion-

ally appears in enormous numbers and causes great damage to small grains. Early in January the insect was reported from eastern central Texas as attacking fall oats. In the area mentioned the temperature was 9° to 12° above the normal. About the same time, as was later shown, it began to breed rather rapidly in fall-sown oats in southern South Carolina, the temperature at the time being from 6° to 9° above the normal. During February the region west of the Mississippi and the Great Lakes was warmer than usual, and during this month much damage seems to have been done in Texas. On March 6 the insect was first reported from Arkansas, and an agent was immediately sent to the field to experiment with measures for destroying the insects in the field, especially over the spots where they seemed to be most abundant, and to determine what could be accomplished in checking the ravages of the pest by the early introduction of its natural enemies into the infested fields. On March 18 several boxes of parasites reached the Arkansas fields from an agent of the Bureau in Texas, but local parasites were already there in great numbers, and further importation of parasites was useless; the "green bugs" were evidently about to be destroyed. The agent then proceeded to various points in Oklahoma, but at Chandler and Guthrie the local parasites were already practically in control. At Kingfisher the parasites were found less plentiful, and parasites were at once introduced in great numbers from Texas and Oklahoma. Proceeding farther, the agent reached Wellington, Kans., on March 30. In the next week thousands of parasites were brought from Oklahoma and liberated. On April 9 it is estimated that more than two and a half millions of parasites were liberated in a single wheat field near Wellington. This was done in order to make a decisive test as to whether it is possible to aid in protecting fields in this manner along the advance line of invasion of the "green bug." The weather was still cold, and it was thought that if the artificial introduction of parasites would, with the return of warmer weather, hasten the control of the Toxoptera, the introduction of a large number would clearly demonstrate this fact; and if such an introduction on a large scale proved favorable it would show a reasonable ground for a more general introduction of parasites in lesser numbers. The weather during the whole of April was generally cold, with an occasional storm that is known to have killed many of the parasites, and though there were brief periods of warm weather during which the parasites would increase rapidly, the Toxoptera was not overcome in southern Kansas until about the middle of May. The weather conditions were almost universally unfavorable to the parasite and therefore favorable to the development of the "green bug." Two agents stationed near Wellington and in northern Oklahoma were constantly watching a wide range of country, and the results indicated that the local parasites developed in other places, aside from the experimental field near Wellington, about as rapidly as in the field where the two and a half millions were liberated. No benefit in this field was indicated above other fields, near or remote, where no artificial introductions were made. Minor introductions were made at McPherson and at other points, and in no case was there a field of the hundreds examined in southern Kansas where the number of parasites natively present did not outnumber by many

thousands or hundreds of thousands those liberated artificially at a time when weather conditions had become such that the liberations could have had any benefit. When weather conditions became favorable, parasites were abundant in equal numbers in all fields. The weather is the important influence, and without favorable weather artificial introduction of parasites does little good in the case of this insect.

On May 13 Professor Webster visited the field and conducted a further experiment in this direction, with a view to hastening the work of the parasites during favorable weather by large introductions. Two fields of oats near Manhattan, each containing 4 acres, were selected. These fields were sufficiently widely separated. One of them was used as a check, and into the other were introduced very great numbers of parasites sent from Wellington. Careful count showed that in these fields the percentage of native parasitism at the beginning of the experiment was from 3 to 7. On May 18 many hundreds of thousands of parasites were liberated in one of these fields. On May 23 in this field the parasitism had increased only about 2 per cent, whereas in the check field, in which no parasites had been liberated, it had increased 12 per cent. On May 27 the percentage of parasitism in the field into which the parasites were introduced had reached 27, while in the check field it was 32. It was thus clearly demonstrated that, even under weather conditions favorable for the development of the parasites, an introduction to the extent of millions carried out under field conditions does not indicate enough efficiency to afford any encouragement for the use of this measure in the protection of the grain fields in case of future attack. It seems that with all the artificial introductions of this parasite that were made in the spring in grain fields of Kansas and the adjacent States and Territories there is no probability that a single bushel of grain was saved by such introduction. Similar substantiating experiments were conducted in North Carolina and Virginia. Careful study was made of the life history of the most important of these parasites, a minute braconid of the genus Lysiphlebus.

Extensive experiments were made with mechanical artificial remedies. Owing to the fact that the insect usually makes its appearance numerously in spots and spreads rapidly from these places, it becomes desirable to know some method of quickly destroying it in the spots first attacked, even at the sacrifice of that portion of the crop in order to protect the rest of the fields. It was shown that these spots can be treated successfully by plowing under and then harrowing and rolling the surface of the ground, by spreading straw over them and burning, or by treating with a 10 per cent solution of kerosene emulsion. In the southernmost regions infested by this pest, however, the greatest difficulty does not seem to arise from these isolated spots, which seem to extend outward from day to day, but from the fact that, after their food supply has become either largely destroyed or the grain is too old and tough for them to feed upon, immense swarms of winged adults are produced, and these drift in general northward with the advance of the season and infest the grain fields of entire sections of the country much earlier and more completely than would be possible from the scanty stock natively present. This habit is also seen in the behavior of the pest

in its original home, in Europe. It may therefore prove that the country north of the Red River may be more or less protected if the pest can be early overcome in northern Texas.

JOINT-WORMS AND OTHER GRAIN INSECTS.

Some work has been done with an important enemy of the wheat joint-worm, and investigations of the timothy joint-worm have been continued. It is shown that the damage to the seed of timothy by the action of this insect is greater than the damage to the hay crop. Rotation of crops seems to be the most practical preventive measure with both of these insects.

Further investigations have been made on the seed-corn ground-beetle and the corn root-aphis and a number of other insects belonging to this group.

WORK ON INSECTS INJURIOUS TO VEGETABLE CROPS.

The work on insects injurious to vegetable crops, under the charge of Dr. F. H. Chittenden, has been somewhat developed during the past year. Especial attention has been given to insects affecting this class of crops in the Southern States and to the insect enemies of the sugar beet in the West.

INVESTIGATIONS IN THE SOUTHERN STATES.

A special agent was sent to southern Texas in March to establish headquarters in Corpus Christi, where work was begun upon such prominent southern pests as the bollworm in its occurrence upon tomato and other truck crops. The onion thrips was the subject of special study in its occurrence on onions. Cooperative demonstration work against the melon aphis was carried on as in the previous two years with the Texas Agricultural Experiment Station, and studies were made of three species of leaf-beetles which affect cucurbitaceous and other truck crops.

A similar line of investigations was conducted by an agent in Florida, who, however, did not begin work until May, and whose investigations must be considered simply as preliminary. The species which have so far formed the subject of special investigations in this region are the pickle worm, imported cabbage webworm, and the melon aphis. A study has been begun of the natural enemies of the melon aphis, looking to a possible exchange with the Texas Agricultural Experiment Station, provided insect enemies are found in one State that do not occur in the other.

Study was also begun of the cabbage looper, the grass worm in its occurrence on sweet corn, a destructive cutworm, plant-bugs, flea-beetles, and certain other species.

ENEMIES TO THE SUGAR BEET.

The scope of the investigation of the insect enemies of the sugar beet, which have been under continuous observation for a number of years, was augmented by the employment of a special field agent in cooperation with the Utah State Agricultural Experiment Station to study the principal pests found in Utah, Idaho, and Colorado. A destructive leaf-hopper (*Eutettix tenella*), known in that region as the white fly or blight and as the supposed author of "curly leaf"

from the effect of its injuries to beets, has received special attention, and an extensive account of its life history and habits has been prepared and is available for publication. The publication when completed will contain also short notices of related species occurring in the same regions, together with suggestions for the control of leafhoppers.

In the autumn of 1906 a temporary field agent was employed to investigate the local conditions of sugar-beet insects of southern California. Especial attention was given to the beet aphis, flea-beetles, and the leaf-beetles.

OTHER INVESTIGATIONS.

A number of other important species occurring upon truck crops have been under observation, and a bulletin has been published on the asparagus miner and the asparagus beetles.

WHITE FLY INVESTIGATIONS.

For some years there has been a desire on the part of important interests in Florida to have the Department undertake a new and thorough investigation of the injury by the white fly to citrus fruits in that peninsula. The white fly has for many years been one of the greatest obstacles to the success of the citrus industry in Florida, and has been studied by the Bureau of Plant Industry from the standpoint of the sooty fungus which follows it, and by this Bureau from the life history side and means of control. A preliminary survey of the territory was made in 1905, but no appropriation for extended work was available until the fiscal year beginning July 1, 1906, when Congress specifically designated $5,000 for this investigation. This work has been under the direction of Mr. C. L. Marlatt, Assistant Chief of the Bureau, with Mr. A. W. Morrill, special agent, in field charge, with headquarters at Orlando, Fla., assisted at various times by men temporarily transferred from other investigations, and by a special appointee, Mr. Stephen Strong, for two months as fumigation expert from California.

The white fly is an important pest throughout the Gulf region, and this year has been found fairly well established about Marysville, in California. This California outbreak was entirely unexpected, as the climate of the Pacific orange districts is distinctly unfavorable to this pest. The white fly requires a considerable rainfall or humidity, and there is reason to hope, therefore, that the California outbreak is a temporary one, induced largely by a season of exceptional rainfall and moisture in the region designated. As a matter of fact, radical measures instituted by the State Horticultural Commission have apparently eradicated the pest.

The work done during the year with the white fly in Florida includes (1) life history studies; (2) natural control, i. e., by parasitic insects or fungous diseases; and (3) control by the use of insecticides or by "gassing."

While the life history of the white fly has already been pretty carefully worked out in its main details in the earlier work done with this insect, still much information of distinct value is resulting from the present more thorough and detailed study. The greater part of the year covered in this report was one of unusual drought in Florida,

and it has had the general effect of greatly reducing the abundance of the white fly and is confirmatory of the fact, stated above, of the dependence of this pest on a considerable amount of moisture. With the return of normal conditions, however, the pest is now rapidly increasing to its usual status.

One of the most important factors for the natural control of an insect like the white fly is parasitic enemies; but unfortunately the white fly in Florida seems to be devoid of true parasites. Efforts are being made, however, to obtain parasites of other species of the same genus (Aleyrodes) to which the white fly belongs, and to introduce these into Florida in the hope that some of these may eventually become important means of control. There are many species of Aleyrodes, and some of these in different parts of this country and in foreign countries seem to be controlled by parasites. Several native predaceous insects have been found to prey upon various stages of the white fly, but thus far they produce no important check.

The most useful natural-control agencies are parasitic fungi, which have, especially in the southern range of the white fly, been often of very great service in checking it and which sometimes almost exterminate it for a period. In Manatee County, where the two important species of fungous enemies have been longest established, they result on an average of one year in three in checking the white fly sufficiently to free the trees and fruit from the sooty mold which follows white fly attack, and all the time reduce the amount of injury very much. The investigation of these fungi, and particularly the determination of means of experimentally increasing their range and efficiency, is one of the most important of the problems connected with the white fly work. The benefit from them is especially noticeable in regions with a high degree of humidity, but from the present examination of the subject it does not seem likely that they can ever be made equally effective in the drier citrus regions in Florida.

A good deal of insecticide work has been done in Florida in former years against the white fly, principally, however, with liquid sprays, such as resin wash and kerosene emulsion. No such work, however, against the white fly is effective unless it is general, as the insect flies readily and is carried by winds from one orchard to another, so that it spreads much more quickly than is the case with scale insects. While spraying has been practiced to a great extent in Florida, it has been irregular and often fails to give satisfactory results. A thorough investigation of the use of liquid sprays is in progress.

The use of hydrocyanic-acid gas has not been adopted in Florida to any extent, but the necessity of thorough work on trees would seem to indicate the great desirability of this method of control of the white fly. To take advantage of the large amount of practical experience which has been gained during many years in California in gassing citrus trees, the services of Mr. Stephen Strong, one of the horticultural commissioners of Los Angeles County, were secured for two months last winter to introduce and superintend the hydrocyanic-acid gas fumigation in Florida. The results already reached from these experiments indicate that under favorable conditions—isolation from other infested groves or where concerted action can be had—fumigation is more economical than spraying, and much more certain in its results than reliance on natural enemies.

There has been no official publication during the year giving the results of the investigation, but articles by Mr. Morrill covering special features of the work have been published in the agricultural press of Florida, and a paper was presented before the Southern States Association of Commissioners of Agriculture and also before the Florida State Horticultural Society.

INVESTIGATIONS OF INSECTS IN THEIR DIRECT RELATION TO THE HEALTH OF MAN AND DOMESTIC ANIMALS.

MOSQUITOES AND HOUSE FLIES.

Work has been continued on the Monograph of the Mosquitoes of North and Central America and the West Indies, and a skilled agent has been sent to Panama, in cooperation with the Isthmian Canal Commission, to study the mosquitoes of the Canal Zone, with especial reference to the geographic distribution and breeding conditions of the species that carry disease.

No further work on the house fly has been done, but extensive correspondence has been carried on with individuals and with boards of health. A revised edition of Circular No. 71 of the Bureau has been published and widely distributed.

WORK ON THE TEXAS CATTLE TICK.

The importance of the extermination of the cattle tick has recently been brought prominently to public attention. Absolute extermination seems feasible. The work on the life history and habits of the tick, on which means of eradication or control must be based, falls naturally within the province of the Bureau of Entomology, while the eradication or control work itself is carried on by the Bureau of Animal Industry. Some good work on life history and habits has been done by a few of the State officers of the South, but this work has been far from commensurate with the magnitude of the problem. As indicated in the last annual report, a beginning was made in the study of the tick at the urgent request of many experiment-station officers and cattle raisers of the South. This work was done in connection with the cotton boll weevil investigation, and necessarily could not be of an extensive character. Nevertheless the experiments and observations made during the year revealed many points of practical importance. The results are soon to be published in a bulletin by the Bureau. The work under way is designed to show the variations in the development of the tick on the hosts and the duration of the period passed on the ground. The interrelationship between these periods is the most important matter that must be taken into consideration in formulating plans for control. The principal work under the Bureau is being done at Dallas and Victoria, Tex. The longevity of seed ticks is being tested and the probable duration of the egg stage under various conditions. Cooperation has been obtained with experiment stations, and notably with the Tennessee station.

In connection with the study of the cattle tick, it has been possible to make observations on a number of other species of ticks that are now of considerable importance as animal parasites. Some of these

may assume much greater importance if they are found to be concerned in the transmission of disease. In this work several species not known previously to occur in the United States have been taken by agents of the Bureau, and notes have been made on their life history and means of control. Other species known to occur in the United States, but which have not been carefully studied, are receiving attention.

WORK ON SCALE INSECTS.

The principal scale pests are in evidence every year, and even the San Jose scale has become so thoroughly well known and understood that its steady extension causes no special excitement. Practical control by remedies is becoming more efficient every year. Some special work with insecticides against it has been referred to in another place. The requests for information on this and other orchard scale pests are a steady and considerable factor in the correspondence of the Bureau. Among the scale pests which are not strictly orchard or small-fruit species several have been especially complained of during the year. For example, the magnolias in the Gulf States seem to have been badly infested with a Lecanium soft scale, *Toumeyella turgida* Ckll. Another species of this genus, *Toumeyella pini* King, appeared in injurious numbers on young seedling pines in several eastern nurseries. The soft scale of the tulip tree is reported to be damaging tulip and magnolia trees in various localities in the Eastern States. A common West Indian scale pest, *Asterolecanium pustulans* Ckll., is gaining a foothold in the vicinity of Miami, Fla., on oleander, fig, mango, and other plants. *Pulvinaria pyriformis* Ckll., also a West Indian scale affecting guava, cinnamon, and Persea, has been found in Florida on cinnamon trees, this being the first record of the species for the United States. The cottony maple scale (*Pulvinaria innumerabilis*), referred to in a former report as having been so generally prevalent during the last three years, seems in great measure to be under the control of its natural enemies, and very few complaints have been received this year of damage by this insect. This native species, as pointed out in earlier reports, is one that seems to have a periodic habit produced by the action of natural enemies. Just now, fortunately, we are apparently entering into a period when such natural control is efficient.

EXPERIMENTAL WORK WITH INSECTICIDES.

With the broadening of the work of the Bureau and its separation into definite investigations, the experimental work with insecticides becomes naturally more or less divided and assigned to the different fields of entomological research.

The profit from insecticide applications is marked in the case of the insect enemies of the deciduous orchard fruits and of small fruits, and the following experimental work in this field is under way or has been completed: (1) A careful testing of various formulas of lime-sulphur washes for the San Jose scale, carried out in three distinct latitudes and extending over a period of two years. In connection with this work several other substances of possible value against the San Jose scale have been tested, including the

miscible oils. (2) A thorough testing of the effect of various arsenicals, with and without lime, on the foliage of peach, was begun in the spring of 1906, and is being continued this year. (3) In cooperation with the Bureau of Chemistry, an examination is being made of as many brands as possible of arsenate of lead collected from various sources in the open market, and also an investigation of the method of preparation and proportions of the ingredients. (4) In connection with the investigation of the codling moth, the peach borer, and other fruit insects, washes commonly employed are being tested, together with various new combinations.

As already stated, the white-fly investigation of the Bureau in Florida has led to an examination of the possibilities of introducing into Florida the gassing method so long the standard means of controlling scale insects on citrus fruits in California, and some very careful preliminary experiments have been made. The results are very favorable, and the outlook now is that gassing can be made effective against the white fly. This work, however, has only been begun, and the investigation will be continued the coming fall and winter. The work in Florida will be conducted in cooperation with and as a check on the careful investigation of the whole question of gassing citrus trees which is to be instituted with the fiscal year beginning July 1, 1907, in southern California.

The effect of gassing on the eggs of such scale insects and aphides as hibernate in the egg stage, or pass a considerable resting period in the egg stage, is a subject of the greatest practical importance, and particularly in the fumigation of nursery stock and of new or other plants imported from foreign countries. Hydrocyanic-acid gas has been demonstrated to be the most effective and sure means of destroying scale and other insects on nursery stock or other shipping plant material; but unless it also kills the eggs under the conditions noted the protection is necessarily faulty. This whole subject has been taken up for careful investigation, and some preliminary experimental work has been done with the scurfy scale and the oyster-shell scale, and the apple aphis, all of which winter in the egg stage. Results indicating the requirements of fumigation for this purpose will probably be reached by the end of the next fiscal year.

In connection with the other special lines of work of the Bureau, more or less insecticide investigation has been carried on with stored grain pests, insects affecting cereals, and those affecting shade trees and ornamental plants.

The examination of new remedies for insect pests, and the reports thereon, which are presented to this office from all parts of the United States and from foreign countries with almost every mail, is a part of the regular routine. The active work being done with the boll weevil, the gipsy moth, and the San Jose scale evokes innumerable suggestions, very generally, however, from people who have had no acquaintance with the underlying needs, and therefore in ninety-nine cases out of a hundred these suggestions are either valueless or a repetition of methods already in common use.

INVESTIGATIONS OF INSECTS AFFECTING TOBACCO.

In the bill making appropriations for the Department for the fiscal year ending June 30, 1908, a clause was inserted providing for investi-

gations of insects injurious to tobacco in the dark-tobacco belt of Tennessee and Kentucky. Unwilling to wait until the beginning of the fiscal year before commencing this apparently important investigation, the Bureau sent an expert assistant to the region late in May to make a preliminary examination of the field. He visited Springfield, Tenn., and made examinations along the road from Springfield to Clarksville, Tenn., at Hopkinsville, Ky., and along the road from Guthrie, Ky., to Russellville, Ky.

Some studies were made of the tobacco flea-beetle, which seems to have been especially injurious this year, of cutworms, of aphides, and of a few other species. Experimental plats in Springfield and Clarksville, Tenn., were arranged for, and cooperation with the Tennessee and Kentucky experiment stations was also arranged. A permanent special agent was placed in the region in question at the beginning of the present fiscal year.

INSPECTION WORK.

The Department of Agriculture, through the activities of the Bureau of Plant Industry, has become perhaps the largest importing agency of new stock in the United States. Much of this material comes from quarters of the world which have never been explored entomologically and from which there has been naturally very little commerce in plant material, and therefore all such material is very apt to harbor insect pests new to this country. The worst insect pests of America are those of foreign origin, as illustrated by the San Jose scale, the codling moth, and the black scale in California. To prevent, therefore, the introduction of new important pests, all the plant material imported by the Department of Agriculture is given most rigid inspection by Mr. J. G. Sanders, who has been put in charge of this work. During the year, 916 lots of imported plants were inspected for dangerous insects, the largest of these containing over 5,000 plants. Many of these lots of plants and seeds have been fumigated, and whenever fumigation was impracticable or for any reason inefficient the shipments found infested have been destroyed.

All plants imported from foreign lands or home-grown sent out by the Department of Agriculture are inspected, fumigated, and cleaned, if necessary, before a certificate is granted. Since July 1, 1906, 581 certificates have been issued for the shipment of plants from the greenhouses of this Department.

In connection with this inspection it was very interesting to find the San Jose scale (*Aspidiotus perniciosus* Comst.) very scatteringly present on twigs of pear and apple which had been shipped to the Department from the interior of northern China, notably from Manchuria, by Mr. Frank Meyer, agricultural explorer. The finding of this scale insect scatteringly on these plants is an important confirmation of the results of the exploration by Mr. Marlatt and the determination by him of this very region as the original home of this great pest. The scattering nature also of the infestation would indicate the control locally of the scale by native parasites and predaceous enemies or diseases, and makes it desirable at some future time to have this whole region carefully explored for parasites or other means of natural control of the San Jose scale.

On twigs of pear from Manchuria was found a peculiar new species of Parlatoria which, from the known habits of the group of scale insects to which it belongs, might easily prove to be as bad a pest as the San Jose scale. To preclude any possibility of the introduction of this dangerous scale, all the infested scions were burned, and all other woody material strongly fumigated three times.

WORK IN BEE CULTURE.

During the past fiscal year the work in apiculture has been reorganized, Dr. E. F. Phillips having been placed in charge, and the facilities for the work materially increased.

The chief problem taken up was the investigation of the brood diseases of bees. The principal hindrance to the greatest possible advance of apiculture in this and other countries is the fact that the bee is subject to several diseases, which are widely distributed, and which constitute often a prohibition and always a hindrance to progress. It therefore has seemed best to devote considerable time to this investigation.

At the very beginning of the year the apicultural expert took an extended trip through California, Wisconsin, and Michigan for the purpose of studying the spread of the disease and the methods used by various practical men in its treatment. It was quite evident that there was need for a short publication outlining the symptoms of the various diseases and the treatment, and consequently Circular No. 79, The Brood Diseases of Bees, was prepared and has been widely distributed.

Dr. G. F. White, then of the Bureau of Animal Industry, offered for publication a paper entitled "The bacteria of the apiary, with special reference to bee diseases," which had been prepared by him as a thesis at Cornell University. This paper deals with bacteriological work on the brood diseases of bees, and also contains an account of the normal bacterial flora of the apiary. It was published as Technical Series No. 14.

The work of Doctor White, as well as that of other investigators, made it desirable to take up for consideration the names to be used for the various diseases. Much confusion existed and still exists in some quarters. After consulting by correspondence with some of the leading bee keepers of the United States, it was finally decided to adopt the name American foul brood for the prevalent brood disease of the United States which had hitherto been called simply foul brood and the name European foul brood for the disease known as black brood. These names have been adopted by the bee journals of the United States.

To bring about greater cooperation among the official inspectors of apiaries as well as to spread knowledge concerning the brood diseases of bees, a meeting of inspectors of apiaries was held at San Antonio, Tex., November 12, 1906, under the auspices of this Bureau. This meeting was well attended and attracted considerable attention among persons interested in bee-disease work. The proceedings of this meeting have just been issued as Bulletin No. 70 of this Bureau.

At the San Antonio meeting the Bureau of Entomology was requested to make a study of the workings of the various laws now in force for the control of bee diseases. To aid in this work a list of questions was sent out to all the official inspectors asking them

about the results obtained by them under various provisions of the law; information has also been gathered from all other possible sources. This material is now being gathered together.

Following the San Antonio meeting a similar meeting of the California inspectors of apiaries was held, December 8, 1906, under the auspices of this Bureau.

Whenever possible the apicultural expert and the special agent in California have gone out with the inspectors on their trips. Some new points may always be gleaned from the better inspectors and these are in turn given to those less able to control the situation. While this has been done only incidentally, it has seemingly resulted in considerable good.

Several investigators in Europe have been at work on bee diseases, but because of inadequate descriptions of the diseases and of the organisms found in them great confusion exists. It is essential that the organisms causing bee diseases in this country be known. To provide for this part of the work a small bacteriological laboratory was installed in the spring. The first problem to be taken up was the devising of media suitable for the cultivation of microorganisms which are present in diseased material; the usual laboratory media are not entirely satisfactory and certain of the organisms found fail to grow on them. A medium of filtered bee larvæ has been made on which *Bacillus larvæ*, found in American foul brood, grows freely. This bacillus does not grow on media made of beef. It was also necessary to devise methods for making test inoculations, and in this respect also the results are proving satisfactory. It has been determined that *Bacillus larvæ* is the cause of American foul brood. For the first time this disease has been produced by feeding pure cultures. The details of the media and inoculation methods, as well as the results of the preliminary inoculation experiments, have been published as Circular No. 94 of the Bureau. In connection with this work a large number of samples of diseased brood have been received, and information has been sent out as to the kind of disease present.

The work on "paralysis," a disease of adult bees, has been continued in California. To test the theory that this disease is caused by poor strains of bees, some apiaries in the diseased district have been stocked with queens of good strains. It is too early to tell what result may be expected. So far no evidence of the influence of a microorganism has been found.

The distribution of breeding material of the various less known races of bees was carried on during the summer of 1906, with the result that these races are now offered for sale by various competent breeders. This method of distribution is much more satisfactory than was the promiscuous distribution of former years, which was greatly misunderstood by bee keepers. For the present this distribution on the part of the Bureau has been discontinued.

The work on honey-producing plants has been continued at the substation in California as far as time would allow. Several valuable honey-producing plants have been sent to various parts of California to be tested under the direct supervision of the special agent. Arrangements have also been made to send some of the principal honey-producing plants of the West to the Hawaiian Islands for testing.

To test the comparative value of the various races of bees in fertilizing red clover, a series of cages has been erected to exclude all other bees. This experiment is of interest not only in regard to clover fertilization but also in studying various things connected with the habits of bees.

A list of the honey-producing plants of the United States has been begun which will prove very valuable in future investigations along this line.

The enactment of the food and drugs act, June 30, 1906, proved of great interest to bee keepers and promises to be of great assistance to them in preventing, or at least limiting, the amount of adulteration of extracted honey. In the Hawaiian Islands there was last year produced about 400 tons of "honey-dew honey." Previous to January 1, 1907, this product was sold as honey and with no qualifying clause. During the present calendar year this office had considerable work to do in regard to the method of selling this product in the United States markets, and finally a satisfactory arrangement was made whereby it is to be sold as "honey-dew honey." Several other important problems connected with bee keeping in the Hawaiian Islands have been considered, and more work will be done during the fiscal year 1907–8.

To further the work of detecting the adulteration of honeys, a large number of samples of pure honey from known sources has been collected by this Bureau and has been analyzed by the Bureau of Chemistry of the Department. The results of this work will be published shortly by the Bureau of Chemistry.

In order to find out the status of bee keeping in the New England States the Bureau is engaged in a detailed study of bee keeping in Massachusetts. Every bee keeper whose name can be obtained is asked to answer certain questions regarding the industry in his own town and to give certain information regarding his own apiary. The percentage of replies is extraordinarily large. This not only enables the Bureau to get detailed information which could otherwise be obtained only at great expense, but it has aroused considerable interest in the industry and promises to result in considerable good by putting the publications of the Bureau into the hands of the proper persons. In advancing bee keeping as an industry it is quite desirable to make the persons now engaged in the keeping of bees better bee keepers rather than to induce a greater number to engage in apiculture.

That bee keeping could be carried on to a much greater extent in many sections of the country is quite obvious; it is also a well-known fact that the United States does not now produce enough honey to supply its own market. It is very desirable, therefore, that the industry be advanced by the introduction of the latest and best methods. The work which the Bureau is now doing in Massachusetts is demonstrating the discrepancy between apiculture as it now is and as it may be, and further, it should show how much good may be accomplished by communicating directly with interested persons to bring to their attention desirable information.

This work is being done in Massachusetts because of the fact that it was possible for the Bureau to get as a collaborator in this work Mr. Burton N. Gates, who has been for some time interested in the industry in that State. If the future results are what they now

promise to be, an effort will probably be made to extend the work to other States. At any rate the work will demonstrate the possibilities of the method.

A detailed study of bee keeping in the Hawaiian Islands has recently been begun by Mr. D. L. Van Dine, entomologist for the Hawaii Experiment Station. This work was begun by Mr. Van Dine as an official of his station, but it is to be continued under this office. There are certain things connected with the industry on these islands which make the work of interest not merely to the bee keepers of Hawaii, but equally to bee keepers of the mainland, and it is desirable that this be done under this Bureau.

WORK IN SILK CULTURE.

No changes have been made in the methods that have been followed for some years in the effort to encourage the production of silk in the United States. The interest during the past fiscal year, judging from correspondence, has fallen off. It has been retained to a considerable extent in New York, Pennsylvania, California, Illinois, Missouri, and Texas, but in the other States the interest in this line of work has lessened. It is probable that this falling off in correspondence is due to two factors. The first is one that was pointed out last year—the lack of newspaper and syndicate articles which tend largely to advertise silk culture. Heretofore there has been an abundance of such articles spread from one end of the country to the other, but this year not a single syndicate article appears to have been published. The second factor is lack of interest, furthered by the prosperous condition of the country, which makes larger returns from other lines of work a natural consequence. The returns from silk culture are necessarily small, and it has been the aim of the Department to interest mainly individuals otherwise nonproductive, or those who might make it a small side issue to other farming operations. Should there come a check to the country's prosperity, it is probable that interest in silk culture would immediately revive.

PURCHASES OF SILKWORM EGGS AND THEIR DISTRIBUTION.

Eighty-five ounces of bacologically examined eggs were imported from Italy for distribution to applicants in the spring. The shippers carefully marked the package to be delivered to the Government dispatch agent in New York, and placed it in the hands of the steamship agents to be kept in cold storage en route. Instead of following directions, the steamship agents delivered the package to their own house, and after a week's delay in warm weather forwarded it in bond to the Georgetown custom-house, where there was another week's delay in the delivery of the eggs to the Department. They were found, on examination, to be practically ruined, and the matter was placed in the hands of the Department's law officers in order to recover damages, if possible, from the steamship company. A duplicate order was cabled to Europe immediately, and on February 2 the second shipment arrived by the proper channels and was found to be in excellent condition. There were 13 pure and 8 crossed races, making rather a close resemblance to the importations of previous years. They were placed in cold storage and were drawn in small

quantity from time to time as required. One ounce of eggs of four different varieties was purchased from a French dealer, and 1 ounce of Turkish eggs raised at the American Orphanage at Harput, Turkey, was presented by the United States consul at that place. These special lots of eggs were placed in the hands of experienced rearers who have not yet reported. All of the eggs received, with the exception of the first shipment, seemed remarkably healthy and absolutely no complaints have been sent in. There seems to be no pébrine disease existing among the silkworms in the United States at the present time. The previous year it existed at one locality in Cuba.

There seems to have been a certain amount of home production of eggs in spite of the recommendations of the Department that no eggs should be used except those guaranteed free from disease.

The total sendings of silkworm eggs from the Department this year number 343, as against 413 last year. The geographic distribution of the sendings follows rather closely the lines indicated in the discussion of the silk-culture correspondence, California, Kentucky, the District of Columbia, Georgia, Illinois, Indiana, Kansas, Massachusetts, Maryland, Michigan, Missouri, Nebraska, New Jersey, New York, Ohio, Pennsylvania, and Utah receiving the largest numbers. About 74 ounces in all were thus distributed before the close of the fiscal year.

DISTRIBUTION OF MULBERRY STOCK.

As in the previous year, seedlings of the best white mulberry from Lombardy and Sicily were distributed to all applicants during the late fall and spring, none being sent out during freezing weather; 10,850 in all were sent out. This is a falling off from the sendings of last year, but to a certain extent some silkworm raisers have received all the seedlings they require or have room for planting. The shipments have been made mainly in lots of from 25 to 50, with occasionally one of a hundred or of several hundreds. Two thousand seedlings were sent to Hawaii. Two kilograms of a good variety of seed were purchased from Milan as a basis for next season's supply of seedlings. These seeds were turned over to the Department's farm at Arlington for planting, in the same manner as previous lots, and are reported to have shown a good germination test.

From all over the country reports of injuries to the mulberry foliage by cold weather have been received. In most cases the foliage was starting well and was then cut off by frost. As a consequence many persons have lost their silkworms through lack of food, and this has had a serious effect upon the quantity and quality of the cocoons offered for sale to the Department, as will be shown later.

SALE OF REELED SILK.

During the year several ineffectual efforts were made to sell the raw silk which had been produced by the Department reels and which has been accumulating for some time. In June a bargain was made with Belding Brothers & Co., and the total amount on hand, 253 pounds, was sold at $4 a pound, bringing a return of $1,012. This amount was immediately deposited with the Treasury

Department in compliance with the regulations. The price of raw silk has been steadily advancing for six months past, and by June of the present year ranged from $3 to $5 for Italian silks, Japanese silks, however, selling for something over $6. The bulk of the product at the Department was Italian silk, the proportion of Japanese silk being very small. It is therefore thought that $4 a pound represents a very fair value, considering that the reeling was done by American women of very short experience. All attempts to dispose of the waste products (frisons, pierced and double cocoons, and so on), have been ineffectual; there seems to be little demand for this material.

COCOONS PURCHASED.

American-raised cocoons have been purchased during the past year whenever offered, at rates of $1.15, $1.05, and 90 cents per dry pound for first, second, and third class cocoons. The Department has continued to assume the expense of transportation, providing for the purpose Government franks sent on application. While the standard of quality has been fully maintained, there has been a considerable falling off in the quantity of cocoons offered for sale, and it has amounted to hardly a third of that offered last year. This loss is to be attributed to some extent to the heavy spring frosts, which destroyed the mulberry foliage, and also to the fact that the eggs sent out a year ago were slightly below standard; but it was evidently due in part to a falling off in interest among producers for reasons already stated. Under ordinary conditions, the cocoons of the new crop begin to come in in straggling lots in May, and during the month of June they are usually being freely offered. During June of 1907, however, the end of the month showed the cocoons coming in but slowly, and the bulk of the buying ran over into the present fiscal year.

REELING OPERATIONS.

Reeling has been conducted as in previous years, only one of the two 4-basin Berthaud reels being operated. There is no available space for setting up the second machine, and no necessity for its use even if there were enough available cocoons to make its operation desirable. At the end of the last fiscal year 3 operators were actively employed in reeling. Their number was increased in July to 5, with the addition of an apprentice serving without pay. The 5 were employed until the end of December, when the reels were closed down for the year.

Four threads have been used exclusively, except in rare instances, when 5 and 6 were employed.

MISCELLANEOUS INVESTIGATIONS, THE EXHIBIT AT THE JAMESTOWN EXPOSITION, AND OTHER WORK.

As in previous years, several additional investigations have been entered into during the year, and some of the principal ones may be mentioned briefly here.

The investigations of the insects affecting stored products have practically been completed. A few questions of a nature not discussed in Farmers' Bulletin No. 45 are occasionally asked in corre-

spondence, necessitating continued investigations of a minor character.

A special agent in Florida has investigated some of the principal insect enemies of the pecan in that State, especially the budworms, which are credited as being the most destructive of the pecan insects in this country. Some elaborate work on the insects affecting acorns of the different species of oak has been begun looking toward a somewhat complete consideration of the subject. Investigation of insects injurious to shade trees has been continued, as in the previous year, and the increasing importance of some species, such as the imported willow curculio, will necessitate further observations with a view to discovering better methods of control than have hitherto been devised and employed. This insect is now very generally distributed throughout the Northern States, from Maine through New England, New York, Pennsylvania, and Ohio to Wisconsin, Minnesota, and North Dakota. It is a pest on poplar and willow, and is especially troublesome to nursery stock.

Much study has been given during the year to the important parasites of scale insects, and a technical bulletin has been published describing a number of forms new to science that either have been imported into the United States or have been sent here for study by the entomologists of foreign countries.

The exhibit of the Bureau of Entomology at the Jamestown Tercentennial Exposition occupied the time of one of the trained assistants of the Bureau for a portion of the year. It was arranged in sections so as to facilitate the location and study of any particular pest in the collection. The following subdivisions comprised the main part of the exhibit: Insects injurious to southern field crops; Insects injurious to fruits; Various insect pests; Parasites of domestic animals; and Household insects. A prominent place was given to the enlarged models of the malaria mosquito and the life history of the protozoan parasite carried by it. Large models of the yellow-fever mosquito and the salt-marsh mosquito were also exhibited, and the large models of the codling moth, the San Jose scale in all stages, the chinch bug, the Hessian fly, the house fly, and others attracted much attention from the visitors to the building.

The correspondence of the Bureau was increased over the previous year, necessitating a still further enlargement of the clerical force. The routine work in the insectary has also increased, and biological studies have been made of a large number of species not hitherto investigated. The work of determining the specimens for the entomologists of State experiment stations and other workers has also increased over the previous year. Many thousands of specimens have been received from these workers, and a considerable part of the time of a number of expert assistants was taken up in this way. This work is important and is a proper function of the Bureau, although it is barren of immediate practical results.

PROPOSED WORK FOR THE FISCAL YEAR 1908.

Work for the fiscal year is now well under way, and naturally, for the greater part, it consists of a continuation of the lines of investigation just indicated. Several new lines of work, however, have been added during the present fiscal year at the direction of

Congress. The first of these is an investigation of the insects injuring tobacco in the dark-tobacco sections of Tennessee and Kentucky, and some reference to this work has already been made in the body of this report. The second new investigation consists in a study of the depredations of the grape root-worm in the Erie grape belt of Pennsylvania with a view to carrying out demonstration work in its control. Provision was made to begin this work in the spring of 1907 on account of the necessity for an early start well before the beginning of the new fiscal year. Series of experiments and demonstrations are now in progress, including tests of sprays, timely cultivations, and the renovation of vineyards already seriously injured by the grape root-worm. Together with this work other important grape pests are being investigated, such as the grape berry moth, the grape leaf-hoppers, rose chafer, and others. This work is limited practically to the Erie grape belt and is carried out in connection with other investigations of deciduous fruit pests at the field station at North East, Pa.

Another new line of work consists in an investigation of the depredations of deciduous-fruit pests in California. The large fruit interests in that State and the recent attack of the pear thrips in the Santa Clara Valley led to a provision by Congress for the establishment of a field station in that State for this purpose, beginning with the fiscal year 1908. Two well-trained men, familiar with California conditions, have been assigned to the work, and attention will be at once given to the more important insect pests, such as the pear thrips, codling moth, California peach borer, grape Phylloxera, and others.

Attention was called in the last report to the desirability of establishing a field station on the Pacific coast for the investigation of insects injurious to grains. With the added funds appropriated by Congress this has become possible the present fiscal year, and an expert assistant has been placed in northern California to study all cereal and forage crop insects of the far West. Had this station been established during the last fiscal year, it would have been possible, by the transfer of parasites of the Hessian fly from the East, to bring about results of practical value, since the damage done by this insect in northern California during the summer of 1906 was severe.

Another new project taken up with the beginning of the fiscal year 1908, at the especial request of several of the horticultural commissioners of California and at the instance of Members of Congress representing the principal citrus districts, is the investigation of hydrocyanic-acid gas fumigation in southern California. The fumigation of citrus trees with this gas to control scale insects has been in California the standard means of control for years. The methods now followed are the outgrowth of these years of experience and give, as a rule, satisfactory results. There occurs, however, from time to time serious damage to trees and fruit. The use of this method has increased enormously with the betterment of the citrus market during the last few years, and it becomes of great importance to all citrus growers to have fumigation placed upon an exact basis to give it its greatest efficiency and to remove or greatly lessen the likelihood of any bad results. This investigation will be carried out during the fiscal year 1908 in southern California under the direct supervision of Mr. C. L. Marlatt, and will include a thorough survey of existing

conditions from the insect side, and also an examination of current practice throughout the district. In the fall and winter there will be conducted field tests of fumigation to discover the best formulas and methods from the standpoint of efficiency and the freedom from ill effects of trees and fruit. In this investigation the Bureau of Entomology will have the cooperation and assistance of the Bureaus of Chemistry and Plant Industry of the Department.

With the boll weevil, the reduction in the appropriation for the investigations by this Bureau prevents the work of this fiscal year from being conducted on as broad lines as was intended, but many of the important lines that have been under way and that have been suggested by recent investigations will be continued. The experimental field work now going on is located at seven points in Texas, one in Arkansas, two in Louisiana, and one in Indian Territory. Two hundred and thirty-eight acres will be utilized under contract, and the use of about as much more has been granted by private parties. The work is all being located in regions where the greatest damage may be expected. The general work of the investigation is divided into 26 distinct projects, to which different men are assigned and for which they become responsible. Among these projects are a further study of the flight of the boll weevil and its bearing on control and quarantines; life-history studies in the Red River Valley in Louisiana sufficiently comprehensive to reveal points which will necessitate changes in the system of control perfected in Texas; the exhaustive investigation of insecticide control in the light of discoveries recently made; a study of the possibility of attracting the weevils in the fall or in the spring by food supply and shelter; a study of the climatic control of the weevil with reference to probable future damage; an investigation of cultural practices in relation to control of the weevil; a continuation of experiments and observations on the most favorable time for fall destruction of plants, and the relative effectiveness of this operation at different times; study of new types of machinery designed for weevil control, and other lines of equal or lesser promise. Special efforts will be made in the practical utilization of the information that has been obtained regarding parasites and predaceous enemies of the weevil. Shipments of parasites will be sent from Texas to the infested region in Louisiana. In cooperation with the Louisiana crop pest commission, an agent has been stationed at Shreveport, La., to assist in this work. A series of special experiments will be carried out in Texas in inducing parasites of related weevils to attack the boll weevil. Cooperative work is under way, in connection with the Mexican authorities, having a bearing upon the study of the parasites, and Mexican parasites will be sent to the United States in a much more systematic way than has been possible in the past.

The work against the gipsy moth is at this time of writing well under way, and consists in the continuation of the methods adopted for the previous fiscal year. Following the spraying work, the cleaning up of roadsides will continue, and as the winter approaches scouting and the destruction of egg clusters will follow.

With regard to parasites, arrangements have been made so that European material will continue to be received practically through-

out the year. With the conclusion of the gipsy-moth caterpillar season in Europe, brown-tail moth eggs will be received; the predatory Calosomas will continue to come up to autumn; gipsy-moth eggs will be received during the autumn; and brown-tail moth nests during the winter. With the opening of the season will begin shipments of larvæ of both brown-tail and gipsy moths. A further effort will be made to introduce the Japanese parasites by correspondence, and, if necessary, with the cooperation of the Massachusetts State authorities, an agent will be sent to Japan for this purpose. The parasite laboratory at North Saugus, under the control of the Massachusetts State authorities, will be changed in location and much enlarged, in order to accommodate more workers and in order to handle the greatly increased amount of parasitic material coming from Europe under the joint auspices of the Bureau of Entomology and the Massachusetts officers.

The work in regard to forest insects has been carried on almost entirely in the direction of projects already begun, and the same may be said for the work on grain insects, with the exception of the new Pacific Coast station referred to above. An investigation of alfalfa insects will be included.

With regard to the white fly, the investigations of the past year have laid a good foundation for an exhaustive study of the whole problem with a satisfactory outlook. The general work of the present fiscal year will follow the lines already indicated, but the increased funds provided by Congress will make it possible to conduct the experimental field work on a much larger scale and thus secure practical results of much greater value. Measurably conclusive results from experimentation with means of control, both by spraying and gassing, should be reached within a reasonable length of time, and possibly by the end of the next year's work. The work with fungous diseases will take more time, in all probability, and the introduction of parasites will also require additional time. The absence of parasites and important natural means of control other than fungous diseases in the white-fly districts of the Gulf region warrants the expending of considerable effort to promote the introduction of parasites, particularly as the horticultural conditions of Florida are such that concerted action with the usual remedies will be very difficult.

In bee culture bee diseases will continue to be the subject of most importance for investigation. The bacteriological work which has been begun so favorably will be continued, and detailed studies will be made of the various micro-organisms found. Inoculation work will be continued on a large scale, and an attempt will be made to determine the cause of European foul brood. All of these investigations will point toward improved methods of treatment. A bulletin on the practical control and inspection of bee diseases will be presented during the year. Investigations looking toward the discovery of the cause of swarming and leading to work on swarming control will be undertaken, and experimental work upon queen mating will also be undertaken.

The other work of the Bureau will consist in carrying on the investigations already begun.

SUGGESTIONS AS TO WORK RECOMMENDED FOR THE FISCAL YEAR ENDING JUNE 30, 1909, FOR USE IN PREPARING ESTIMATES.

As the work upon the various projects entered into continues, opportunities are seen in many instances where more assistants can be used to advantage in the hastening of important results, and with the employment of further assistants comes the necessity for larger funds for expenses. It therefore seems most desirable that the fund for general entomological investigations be increased from $113,800 to $150,000. This will enable additional men to be employed and will extend these important investigations in a way to insure greater efficiency, and thus, naturally, increase the speed in the accomplishment of practical results. Should this additional appropriation be made, the increased amount will be divided among the different lines of work in the directions in which such increase is seen to be most needed.

With regard to the boll-weevil investigations, it is not considered by the Bureau that the problem is by any means completely solved. It is believed that more effective means of control than those now known may be discovered. In regions that are now being invaded or almost to be invaded there is urgent need for methods to meet the new conditions. The pest has caused the actual abandonment of land in some parts of Texas, and where this has occurred the conditions approach those in regions now being invaded. The work already done along some lines, notably with parasites and predatory enemies, has just reached the stage where most important results may be expected. This work, in the nature of the case, must go slowly, but it should be prosecuted until every possibility has been exhausted. Isolated colonies ahead of the territory that will be reached naturally in several years are increasingly likely to be found, and the immediate eradication of one of these would mean a saving of many thousands of dollars to the locality concerned. For the reasons given above, it is considered that the situation urgently demands a continuance of the present appropriation of $40,000, and that it would be wise to provide an additional amount of at least $10,000 to be used in case isolated advance colonies should come to light.

In the work of preventing the spread of the gipsy moth and the brown-tail moth, the results obtained have been so excellent as to show thoroughly the practical value of this appropriation by the General Government. The spread could be still more effectively checked and the infested area be more rapidly reduced in direct proportion to the expenditure of more money. It is the urgent desire of the inhabitants of the infested region that more work should be done by the Government. In view of results, this desire seems reasonable, and an increase of $100,000 is therefore recommended in the sum to be devoted to preventing spread of moths—$250,000 instead of $150,000.

In regard to salaries, I respectfully urge that two additional clerks of Class 3 be added to the statutory list. Prior to 1905 one such position was contained in the list, but was dropped that year. The object of this recommendation is to establish on this roll a proper opportunity for promotion which does not exist at present. Owing to the increased activities of the Bureau a larger clerical

force is needed, and the lower positions made vacant by promotions could be filled with new employees. There are on the roll at present two skilled stenographers of long service and of the most deserving character who should have been promoted to the third class before this. The addition of these two clerks will therefore allow a sufficient increase in the clerical force and at the same time permit the deserved promotions. I further recommend that the salary of the chief clerk of the Bureau be raised from $1,800 to $2,000 per annum. This will place the salary of this employee more nearly on a par with the corresponding positions in other Bureaus, and the promotion is thoroughly deserved. I also respectfully urge that the salary of the Chief of Bureau be increased to $5,000. The importance and scope of the work conducted in the Bureau are such as to warrant this increase.

REPORT OF THE CHIEF OF THE BUREAU OF BIOLOGICAL SURVEY.

U. S. DEPARTMENT OF AGRICULTURE,
BUREAU OF BIOLOGICAL SURVEY,
Washington, D. C., August 10, 1907.

SIR: I have the honor to transmit herewith a report of the work of the Biological Survey for the fiscal year ended June 30, 1907, with outline of work for 1908, and recommendations for 1909.

Respectfully,

C. HART MERRIAM,
Chief.

Hon. JAMES WILSON, *Secretary.*

THE WORK OF THE BIOLOGICAL SURVEY.

The work of the Biological Survey as laid down by Congress is conducted under three general heads: (1) Investigation of the economic relations of birds and mammals to agriculture; (2) investigations concerning the geographic distribution of animals and plants with reference to the determination of the life and crop belts of the country; (3) supervision of matters relating to game preservation and protection, and the importation of foreign birds and animals.

ECONOMIC ORNITHOLOGY AND MAMMALOGY.

No part of the work of the Survey is of more immediate practical importance than the study of the relations of birds and mammals to agriculture. Our growing population, due to the natural increase of our own people and to the army of immigrants coming to the United States in ever-augmenting numbers, will soon require that every acre of available land be devoted to the raising of crops. The need of a vast quantity of foodstuff for home consumption is still further emphasized by demands from abroad. In response to the necessity for additional food supplies, irrigation is now making available thousands of acres hitherto classed as worthless for cultivation and of but little value even as grazing lands. New and valuable food plants are being introduced from every quarter of the globe. Unfortunately new insect pests also, like the boll weevil, find their way into the country and threaten the prosperity of whole regions. In the war against such pests birds have always played an important part. That they will play a still more important part in the future can not be doubted, and it is desirable that the farmer shall understand the exact nature of their services; for while some

birds are always the farmers' friends and do no appreciable harm, others ofttimes display injurious traits, and there are still others whose habits require careful investigation in order to determine whether on the whole they are to be classed as friends or foes and whether the farmer should protect or destroy them.

Moreover, from a variety of causes, the useful birds of the United States are not increasing in numbers. On the contrary, in many sections they are diminishing with sufficient rapidity to cause apprehension on the part of those who have the future prosperity of the country at heart. The destruction of nesting sites when large forested areas are cut for timber, or devastated by fire, the destruction of vast numbers of birds for millinery purposes and for food, the wanton destruction of birds by boys provided with cheap firearms, together with the robbing of nests (a far commoner practice than is generally understood); these causes, together with the English sparrow, which is rapidly driving away swallows and other useful birds, all tend to one end—a reduction in the numbers of our useful birds—and this at a time when they are becoming of more and more value to the farmer. Hence the necessity for careful study of all available means of protecting birds, of methods devised to attract useful kinds to the farm, and of means of increasing their numbers in every way possible.

The practical problems in relation to the wild mammals of the United States are no less important. Certain mammals, as bats, skunks, weasels, foxes, and moles, are either wholly beneficial or so nearly so as to permit their being classed as such for practical purposes. A much larger class, including nearly all the smaller rodents—rats, mice, gophers, ground squirrels, and rabbits—is everywhere injurious, as also are wolves and panthers. It is to the study of the best and cheapest methods of accomplishing the destruction of these pests that the assistants of the Survey are devoting much time and attention.

PREVENTIVE MEASURES AGAINST MAMMALS.

Experiments with poisons to destroy coyotes, rabbits, ground squirrels, rats, and mice have been continued during the year. Experiments have been made in cooperation with sheep owners in the West for the purpose of fencing sheep from coyotes. Owing to lack of funds it was found impossible to carry out these experiments on the desired scale, and they were temporarily discontinued. The subject, however, is assuming new importance, owing to the ravages of both coyotes and wolves over large areas in the West, and during the coming year practical tests will be made, in connection with the Forest Service, of a fence which it is believed will not only prove an adequate protection from both wolves and coyotes, but will be cheap enough to insure its adoption in wolf and coyote infested districts.

WOLVES.

As stated last year, the problem of ridding the National Forests and cattle ranges of the West of gray wolves was taken up by the Biological Survey at the request of and in cooperation with the Forest Service. As the result of investigations by one of the assistants of

the Survey, a preliminary bulletin was issued, followed later by a circular setting forth practical methods of reducing the number of wolves. Both these publications were widely distributed to forest rangers, ranchmen, hunters and trappers in the wolf-infested regions.

The depredations of wolves are not limited to the western stock ranges. So numerous have timber wolves become in the upper peninsula of Michigan and in northern Wisconsin and Minnesota as to threaten extermination of the deer. At the request of owners of large tracts of forest land and of sportsmen, an assistant of the Survey visited the region for the purpose of studying the problem on the ground and of devising methods to abate the evil. As a result, practical suggestions for destroying wolves were set forth in a circular which has been widely distributed in the above-named States.

Following the adoption of the methods recommended, especially that of destroying the pups in the breeding dens, so many wolves have been killed that the saving of stock this year amounts to at least a million dollars, and it is believed that persistent efforts will result in a permanent reduction of the numbers of these destructive animals, if not their practical extermination in the cattle country. Their absolute and final extermination will probably not be practicable so long as extensive tracts of wild land remain to afford them harborage.

HOUSE RATS.

One of the most important pieces of work of the year is an investigation of the most practical methods of destroying house rats. Despite the incessant warfare waged against them for centuries, these destructive rodents continue to thrive and multiply almost unchecked in every civilized country. The damage they do in the United States is very great, and amounts to millions of dollars every year. As a result of experiments with various traps and poisons it is believed that practical means of reducing the numbers of the pest have been found, and a bulletin on the subject has been prepared and issued.

BACTERIAL DISEASES.

The study of bacterial diseases for the destruction of mammals, in cooperation with the Bureau of Animal Industry, has been continued. This is a comparatively new field, with few precedents to serve as guides in overcoming the difficulties in the way of immediate success. Nevertheless the field is a promising one. It is known that within a few years successive epidemics in various parts of the United States have so decimated the ranks of rabbits and ground squirrels that for several years these animals have ceased to be pests over wide regions. After an epidemic has run its course the particular rodent affected gradually increases in numbers till it once more becomes an economic factor of importance. The purpose of the present investigation is the discovery of the epidemic disease peculiar to each species of rodent, with a view to its utilization in reducing the numbers of crop pests wherever they occur. Such studies have been carried farther in European countries than in our own, and one of several bacterial cultures which have been placed on both the home and the foreign market and widely advertised has been carefully experimented with, chiefly in the laboratory, to test its efficacy on some

of our American rodents. The results of laboratory experiments have been fairly encouraging, but up to the present time field experiments have been disappointing. When fatal results have followed the placing out of infected food, the effects seem to be limited wholly to the individuals eating the infected bait and little or no tendency to spontaneous spread of the disease is exhibited. Thus limited, the disease as a means of destroying rodents is in no wise superior to mineral and other poisons, and in some respects, as certainty of action and the power to retain virulence in hot weather, is decidedly inferior.

Cultures from only one native disease have thus far been obtained. Several years ago this greatly reduced the numbers of one of the smaller ground squirrels of Washington. Since the prevalence of this epidemic the animal has again vastly increased, until now the damage to wheat by its depredations amount to many thousands of dollars yearly. During the present year extensive field experiments were made with cultures of this disease in cooperation with the State experiment station at Pullman, but so far the object arrived at—the production of an epidemic over the extensive area infested by ground squirrels—has not been attained.

Pending the discovery of additional epidemic diseases native to this country, and of methods for their practical utilization in the manner indicated, the best means of keeping rodent pests in check are by the use of poisoned food and of gases for killing the animals in their burrows. Careful experiments have been made along these lines with a view to the discovery of the most effective and the cheapest agents. In States where poison is used annually by thousands of pounds, economy of dose is important. A report setting forth the results of experiments will soon be ready for distribution.

EXAMINATION OF BIRD STOMACHS.

Field investigations and laboratory examinations of the food of birds are carried on simultaneously for the double purpose of ascertaining exactly what each bird eats and of furnishing field assistants valuable hints as to the birds most profitable to study. With the small force now available it is impossible to do much more than keep abreast of the current work, and a large number of stomachs that have accumulated from year to year still remain to be examined. It is hoped that additional funds will enable the force of this department to be increased.

Field observations of the habits of birds, however carefully made, are not wholly reliable, especially when the food consists of small insects, among which are some of the most important pests of agriculture. Final judgment of the value of a bird's services can be rendered only after the examination of the contents of an adequate number of stomachs. This is the court of final appeal. It is hoped that with the aid of additional examiners the work may be pushed as rapidly as its importance demands.

Professor Beal, chief assistant in this branch of the work, returned in December from California, where he had been engaged in investigating the food habits of birds in the fruit districts. The essential purposes of this work are to make exhaustive studies of the food habits of such birds as live in or near orchards, in order to discover to

what extent, if at all, these species injure fruit; and also to learn which birds render important aid to the orchardist by feeding upon insects known to attack fruit and fruit trees. The final object is to discover means of preventing the injuries of the harmful class and of augmenting the numbers of the useful class. A bulletin containing part of the results of these investigations has been published, and the second and final part is now far advanced toward completion.

COTTON BOLL WEEVIL.—Investigations of the relation of birds to the cotton boll weevil were continued during the past year with excellent results, and several additional species were found to feed upon the pest. In all 43 species of birds are now known to feed on the weevil, and the combined assaults of this number, some of which evince a decided taste for the beetles, can not fail to have an important influence in checking the spread of the pest and ultimately in reducing its numbers. A report on the subject has been prepared which contains important suggestions for increasing the numbers of swallows, which prove to be among our most valuable allies in the war on the weevil. During the year two circulars were issued having the same general end in view. In one the attention of the northern farmer is called to the importance of the several species of swallows as general insect destroyers and to their special value to the cotton planter at this particular time, when the most important of southern industries is threatened by the boll weevil. The cooperation of residents of the Northern States is asked in order that the number of swallows in the North may be increased, to the end that after the birds have finished their work in the North, as they migrate to their winter quarters, they may serve the Southern States by attacking the boll weevil.

The second circular is addressed to residents of the Southern States and sets forth the nature of the services rendered by swallows in warring on all flying insects, but more particularly the boll weevil, and explains how the birds may be induced to extend their range over larger areas of cotton-producing territory and also how their numbers may be increased in districts which they already occupy. By the means suggested it is thought that the number of swallows, both in the North and in the South, can be substantially increased, resulting in a corresponding decrease in the number of weevils and other noxious insects.

FOOD OF WILD DUCKS.—Investigations of the food of wild ducks continue, with a view of aiding legislation in the establishment of a proper open season for this important group of food birds. Final conclusions are delayed by the difficulty of securing for examination the required amount of material. Considerable progress in the work has been made during the past year, and up to the present time over a thousand duck stomachs have been secured, rather more than half of which have been examined.

NUMBER OF STOMACHS EXAMINED.

During the past year 5,822 bird stomachs were received and 2,186 examined and their contents tabulated. In addition the stomachs of 1,533 birds from Texas were examined with reference to the number of boll weevils they contained.

SCALE-EATING BIRDS.

The usefulness of birds in warring upon the destructive scale insects has been so generally overlooked that special investigations have been made for the purpose of determining how many species of birds feed upon scales and to what extent these insects constitute the food of such species. As a result 57 species have been found to feed on scale insects—insects whose small size and sedentary habits might be supposed to adequately protect them. From the number, however, found in the stomachs of certain birds, like the grosbeaks, they seem to be specially relished and are regularly hunted for. No doubt further investigations will considerably increase the list of species that destroy scales.

Among the scales detected in the stomachs of birds are some of the most dangerous and destructive of the group. More than 30 kind of birds have been found to eat the black olive scale, perhaps the most dreaded of the family. An article on this subject was published in the Yearbook for 1906.

GROSBEAKS.—Work on the economic relations of the grosbeaks, begun in 1905, was completed during the past year, and a report on the subject is now in the hands of the printer. Some of the species are known to do more or less harm to certain crops, but taken all in all the grosbeaks are found to be an important group, the services of which to the farmer are of great value and entitle the birds to careful protection.

MEANS OF ATTRACTING BIRDS.

So long as our native forests continue to dwindle and as wild land is broken up for tillage, so long will certain of our native birds decrease in numbers, owing to the lack of food and of breeding grounds. It is important to counteract these and other baneful influences by providing in other ways for the welfare of our insectivorous birds. One of the more important of these is by furnishing an increased food supply by planting about houses and gardens fruit-bearing trees and shrubs, such as mulberries, cherries and others. Besides furnishing additional food for useful birds, such trees provide an economical means of protecting valuable fruit from the attacks of birds. Pending the publication of a report upon the subject, practical information as to the best kinds of trees for the purpose, under various climatic conditions, will be furnished on application.

GEOGRAPHIC DISTRIBUTION.

When the Survey began to investigate the economic relations of birds and animals, the recorded information as to the habits and distribution of even the commonest species was found to be surprisingly meager. Since a knowledge of the animals which collectively make up the fauna of a country is a necessary preliminary to a study of their economic habits, the Survey was confronted by the necessity of accumulating this information. One of the results of extensive field work was the surprising discovery that hundreds of previously unknown mammals and a considerable number of unknown birds inhabited North America. Since practically every

species has potential capabilities for good or harm to mankind through its relation to agriculture, it became necessary to classify the newly discovered birds and mammals as well as to study their habits and distribution. This pioneer work of laying the foundation for the more strictly economic investigations to follow has naturally decreased in amount year by year until comparatively little now remains to be done. The resulting publications, treating of special groups of animals, or special geographic areas, have proved of great educational value, are everywhere accepted as authoritative, and have done much to promote the intelligent study of our native faunas. The demand for copies is far in excess of the editions printed.

The field assistants engaged in studying the geographic distribution of animals and plants do not confine themselves to this feature of the work, but also collect as much information as possible in regard to the habits of the various mammals and birds in relation to agriculture and forestry. They are also detailed from time to time to make special investigations of a purely economic character. Thus, during the year, Vernon Bailey, in charge of the work on geographic distribution, made two special field trips to study the wolf problem—one at the request of and in cooperation with the Forest Service; the other at the request of residents of northern Michigan, Wisconsin, and Minnesota.

Arthur H. Howell made two trips to Texas, in fall and spring, to study the relation of birds to the cotton boll weevil.

W. H. Osgood was sent to Maine and adjoining parts of Canada to investigate the subject of fox farming and the rearing of other fur-bearing animals in that region.

H. C. Oberholser was engaged during a large part of the year in the preparation of an economic report on the birds of Texas.

E. A. Goldman was sent to the Salton Sea and Tulare Lake region of California to ascertain what species of waterfowl breed in these areas.

DISTRIBUTION OF TREES.

The extensive field work of the Biological Survey has resulted in the accumulation of an unprecedented fund of information as to the physical conditions and the distribution of plant and animal life in most parts of North America. This information has proved of value to other bureaus of the Department. During the present year, at the request of the Forester, the Chief of the Biological Survey has turned over for publication by the Forest Service a large amount of detailed information on the distribution of forest trees in California and Oregon. These data served to increase vastly the present knowledge of the geographic range of many trees of economic value.

LIFE ZONES AND CROP ZONES.

Extended field work has enabled the Biological Survey to demonstrate the existence and to define the boundaries of several distinct faunal and climatic belts extending roughly in an east and west direction across the continent and turning north and south along the flanks of the higher mountain ranges. Each of these belts is characterized by the presence of certain species of animals and plants, which are more *or less strictly* confined within its limits. The practical

utility of a knowledge of these belts depends upon the fact that a crop which is successfully grown in one section of one of these areas will do equally well under similar conditions elsewhere in the same belt. These belts are called life and crop zones.

In this undertaking the zone maps of the United States already published serve an important practical end. They are of great service also in an educational way in demonstrating the principles which should govern crop introduction.

In addition to zone maps of States and Territories, there is need of more detailed maps on a larger scale of particular areas within which special crops may be grown. The desert region extending from Salt River Valley in Arizona to the Salton Sea district of California is an example of such an erea. When funds are available, it is proposed to prepare maps of this and other special areas for the information both of the resident farmers and of those whose attention has been attracted by the agricultural possibilities of the region and who desire information as a guide to the selection of lands and of crops suited to these lands.

CALIFORNIA.—Field work in California has been continued by the Chief of the Bureau and two assistants. It is planned to issue a life and crop zone map of this State, which is remarkable for the diversity of its climate and its capabilities for varied crop production.

NEW MEXICO.—The field work in New Mexico necessary for the preparation of a crop and zone map is approaching completion. This work is in charge of Vernon Bailey, who, during the present season, has been temporarily assigned to other work.

COLORADO.—Field work in mapping the zones of this State has been continued by Merritt Cary, and efforts will be made to complete it during the coming year.

DISTRIBUTION OF NORTH AMERICAN SHORE BIRDS AND BIRD MIGRATION.

Much preliminary work in the preparation of a bulletin on shore birds has been done by W. W. Cooke, who also has collected and classified a large amount of data on the migration of North American birds.

In addition to the work already mentioned, an advance has been made in digesting and arranging the accumulated data bearing on the distribution and habits of birds and mammals and putting it in condition for immediate reference. Work on the distribution maps has been pushed as rapidly as the exigencies of other and more pressing work permitted.

During the past year, at the request of colleges, museums, and private individuals, many specimens of birds and mammals have been identified to serve for educational purposes, for exhibition, and for study. Many county officers, when in doubt as to the identity of scalps of wolves and coyotes presented for payment of bounty, have forwarded the scalps and skulls to the Survey for positive identification.

GAME PROTECTION.

To the Office of Game Protection are assigned the duties arising under the Lacey Act of 1900, the Alaska game law of 1902, and the

egg act of 1902. These duties embrace (1) supervision of the importation of foreign wild animals and birds; (2) administration of Federal bird reservations; (3) protection of game in Alaska; (4) publication of information concerning game and various phases of game protection; and (5) enforcement of provisions of the law governing interstate commerce in game. The steady increase of work under the several lines makes greater and greater demand upon the limited force of the Office, and an increase will add greatly to its efficiency.

IMPORTATION OF FOREIGN MAMMALS AND BIRDS.

Careful supervision of the importation of mammals and birds into the United States has been maintained, and slight changes have been made during the year to secure greater efficiency. Each collector of customs is now notified by card of the issuance of a permit for an entry at his port, and all permits are made returnable to the Department by the collector if used and by the holder if not used, thus permitting more accurate check of entries. A personal examination of conditions governing importations at New York, Philadelphia, and New Orleans was made, and conferences were held with some of the leading importers.

The provisions of the law prohibiting the importation or interstate transportation of the mongoose, English sparrow, starling, and flying fox or fruit bat have become widely known, and vigilant scrutiny has revealed no attempt to introduce these proscribed species. Early in July, 1906, information was received that a consignment of strawberry finches had been landed in New Work without permit. Investigation through the Treasury Department disclosed the fact that the birds in question, 160 in number, had been brought over by a native officer on a vessel from Calcutta, and had been surreptitiously landed at night and sold to a bird dealer in New York City. A fine of $400 was imposed on the master of the vessel.

The importations of the year include a number of birds and mammals of unusual interest. The opening of the new bird house of the New York Zoological Society at Bronx Park was the means of bringing to the United States many rare birds, some of them for the first time, including 3 Sze-chuan pheasants (*Phasianus satschenuensis*). During the year two consignments of Prince of Wales pheasants, 4 nobilis pheasants, and 42 refulgent monsul pheasants, species rarely brought in, were entered at New York by dealers. A notable increase in the number of common species of pheasants imported was observable, owing chiefly to the great demand for English and ringneck pheasants for stocking purposes. More than 2,000 of the former were imported by the State game warden of Kansas. The stocking of depleted covers with imported game birds was responsible also for a large increase in the importation of European partridges and a slight increase in that of capercailzie and black game.

The importation of eggs of game birds for the purpose of stocking covers seems also to have grown in favor. While the number of eggs entered during the year (5,910) was not greatly in excess of that of the previous year, the spread of interest in this experiment is shown by the fact that the number of consignments received was 39 as against 5 in 1905–6.

The total number of permits issued was 494, an increase of 61, as compared with last year's issue. The year's importations numbered 708 mammals, 351,407 canaries, 5,248 pheasants, 4,867 other game birds, 47,010 miscellaneous birds, and 5,910 eggs of game birds. In addition, 876 mammals, 10,915 canaries, and 18,085 miscellaneous birds were brought in without permits, none being required by law. Of the miscellaneous birds 12,543 were parrots. For convenient comparison the importations under permit of the past five years are shown in the following table:

Year.	Number permits.	Canaries.	Pheasants.	Other game birds.	Miscellaneous birds.	Eggs.	Mammals.	Total.
1903	387	201,527	1,565	7,561	43,980	2,000	629	257,262
1904	318	205,400	661	5,646	35,323	2,858	1,470	251,358
1905	390	230,682	1,147	2,405	36,603	2,270	200	273,307
1906	433	274,914	1,528	5,215	40,640	5,564	654	328,515
1907	494	351,407	5,248	4,867	47,010	5,910	708	415,150

It is interesting to note certain fluctuations in the import trade in birds. A large decrease in the number of Australian birds brought in is noticeable owing to interruption of the trade at San Francisco by the earthquake and fire of 1906. An exception appears in the case of the attractive Lady Gould finches, of which the number imported increased from 4 to 68, received, however, at New York via Europe. The number of Cuban parrots imported under permits advanced from 1,000 to 2,800. The Java sparrow also shows a growth in favor, 9,808 having been entered during the year, as against 6,285 in 1905-6. Other notable increases in numbers over last year's importations were as follows: The African gray parrot advanced from 160 to 388; the Brazilian gray cardinal from 455 to 760; the cordon bleu of Africa from 200 to 462; and the rarer edelsinger from 11 to 22. On the other hand, the popular Japanese robin seems to have slightly lost favor as the number dropped from 4,539 to 2,752.

HAWAII.—Twelve permits were issued for the entry of 66 birds at Honolulu. The importations included 4 canaries, 6 parrots, 4 pheasants, and 52 miscellaneous birds.

BIRD RESERVATIONS.

Thus far seven bird reservations have been established by executive order, as follows:

PELICAN ISLAND.—The brown pelicans on this island in Indian River, Florida, were carefully guarded through the year. As usual the reservation was visited by several parties, attracted by the wild life. A growing interest is manifested in the opportunity afforded of observing so many of these singular birds pursuing their daily lives in a state of nature, and in time Pelican Island is destined to become one of the important attractions of Florida. Nesting began on November 1, 1906, somewhat earlier than usual, and during the season there was a second brood, as there had been in the previous year, although the first hatching, unlike that of the preceding season, was unusually successful. The second nesting of the present year was a failure. The eggs hatched and the young passed through the

first stages safely, but on April 2–4 there was a cold storm accompanied by high water which flooded the island, drowned all of the second brood, and killed some of the old birds as well. Within a week or ten days after this disaster the pelicans began nesting for the third time during the season. By June 1 there were about 100 nests with eggs and young. For some reason, however, in the middle of June all the old birds left the island and the abandoned young perished. As the first and only successful brood consisted of more than 2,000 birds the net result of the season's nesting was a substantial increase in the colony.

Breton Island Reservation.—The islands composing this reservation were visited and somewhat damaged by a severe tropical hurricane that swept the Gulf of Mexico in 1906. Breton Island, 6 miles in length, was split into three parts, and although normally standing 12 feet above water, was flooded throughout its whole extent. Many thousands of pelicans were destroyed by being dashed to the ground by the wind. A beneficial feature of the storm, however, was the extermination of the raccoons and muskrats, which had infested the island and which annually wrought considerable havoc among the nesting birds.

Stump Lake Reservation.—There was some poaching on this reservation during the fall of 1906, and it was found expedient to secure the appointment of the warden as a deputy United States marshal that he might have full power to arrest poachers. Three poachers were indicted at the May term of the court at Fargo, and later pleaded guilty and paid their fines.

PROTECTION OF GAME IN ALASKA.

Early in 1907 a bill making radical changes in the present Alaska game law was introduced in Congress. By its terms the issue of permits to ship trophies was placed in the hands of the governor of Alaska. Hunting licenses were provided for, and other changes shown by experience to be advisable were made. The bill passed the House, but was not called up in the Senate until too late for consideration. In consequence of this failure to establish a license system and relieve the Department of the supervisory duties assigned it by the act of June 7, 1902, the policy in regard to the issue of export permits remains unchanged. During the year 18 permits were granted—3 for the shipment of live specimens for exhibition and domestication, 8 for specimens collected for scientific purposes, 1 renewing an expired permit, and 6 for shipment of trophies secured several years previously or in remote regions of the Territory. During the year 3 shipments passed through the custom-house at Seattle, 2 of which were under permits issued during the fiscal year ending June 30, 1906 (permits to export trophies from Alaska usually expire at the end of the calendar year, and it frequently happens that such as are issued in the spring are not used until the following autumn). As 10 shipments were received at Seattle in the last fiscal year, there was a marked decrease in this year's transactions. No permits were issued to parties desiring to make hunting trips to Alaska or for the shipment of trophies from the Kenai Peninsula.

INFORMATION CONCERNING GAME.

Under authority conferred by the Lacey Act, requiring the collection and publication of useful information concerning the propagation, use, and preservation of game and other birds, various investigations have been continued, the results of which have been, or will be, published in the form of circulars or bulletins. The more important of these investigations are as follows:

GAME LAWS OF THE UNITED STATES AND CANADA.—The annual summary of the game laws of the United States and Canada was revised and a section showing the bills introduced in the various legislatures but which failed to pass was added. As usual prior to the opening of the hunting season, posters, showing close seasons and other incidental provisions relating to the hunting of game in the United States and Canada, were issued.

INDEX OF GAME LAWS.—Work on the index of game laws of the United States from the earlist colonial times to date was continued. During the year the game laws of Alabama, Florida, Montana, Utah, and Viriginia were indexed.

HUNTING LICENSES.—A special circular relating to the hunting-license system was issued, bringing the subject up to date.

HISTORY OF GAME PROTECTION IN FLORIDA.—A brief résumé of the growth and present status of game protection in Florida was published.

As the work of indexing the game laws of the different States progresses and more complete information is received game protection in other States and Territories will be similarly reported upon.

QUAIL DISEASE.—Within a year or two a highly contagious and rapidly fatal disease, closely resembling the dreaded grouse disease of Europe, has appeared among the quail of the United States, and has caused great mortality in consignments of quail from infected localities in Alabama, Kansas, and Indian Territory. In consequence of this outbreak an investigation of the disease was undertaken by the Bureau of Animal Industry in cooperation with the Biological Surevy. The preliminary results of the investigation appeared in Circular 109 of the Bureau of Animal Industry.

CAGE-BIRD TRAFFIC.—An investigation of the conditions governing the cage-bird traffic of the United States was made and the results appeared in the Yearbook for 1906.

GAME COMMISSIONERS AND WARDENS.—The third part of the series of publications relating to the preservation of game and birds has now been completed. It discusses the establishment and maintenance of officers and enforcement methods, and will soon appear as Bulletin No. 28. An article on the subject appeared in the Yearbook for 1906, entitled "The game warden of to-day."

GAME PROTECTION IN 1906.—The general review of game protection for the calendar year, which was prepared for the Yearbook as usual, for the first time included the number of wardens on duty in 30 States, statistics concerning wardens' compensation, and a list of important sentences inflicted for violation of game laws.

GAME PRESERVES.—All obtainable laws relating to the establishment and regulation of game preserves in the British colonies in Africa, Australia, and America have been collected and copies of them have been made for future use. Information concerning the management of these and other foreign game preserves has been secured, especially in relation to the sources of funds for maintenance of supervision. The work of listing the private game preserves of the United States and of securing information as to location, area, and so on, has made much progress during the year.

THANKSGIVING GAME.—As heretofore, information was secured from game wardens and others showing kinds and amounts of game and prevailing prices in the markets immediately prior to Thanksgiving Day.

HUNTING ACCIDENTS.—An investigation has been begun of the number and causes of fatal hunting accidents. Much material has been secured, which will be published in the form of a circular.

BIG GAME.—The damage to crops in New England from deer has received considerable attention. Much material has been secured showing the present distribution of this animal east of the Mississippi River. The restocking of New Jersey with deer and the conditions governing the shipment of deer in Maine during the hunting season also have been made subjects of special investigation.

IMPORTATIONS.—A card index of importations has been brought practically to date. Data on the earliest importations of various birds prior to 1900 (the date of the passage of the Lacey Act) will be secured for reference and for future use. The parrots and most of the game birds have been already covered.

WILD TURKEYS.—Special investigation has been made of the occurrence and distribution of wild turkeys in the Southern and Eastern States.

COOPERATIVE WORK.

Much attention was devoted to cooperative work with Federal and State officers and private organizations. Aid was rendered the customs officials at New York in determining the question as to whether imported guinea fowls should be classed as game or poultry. Bird reservations are always policed in cooperation with the National Association of Audubon Societies, which also furnishes boats for the use of wardens—one launch for Pelican Island, two launches for Passage Key, and a sailboat for Breton Island reservation. Without this aid protection of the bird colonies on these islands would be out of the question, and it is only proper that the Department should bear a larger share of the expenses of the reservations.

Most of the cooperative work performed, however, is in connection with the establishment and maintenance of efficient game and bird protection by State game commissioners and wardens and others interested in preserving game and birds. By special request facts were presented to the Alabama legislature derived from the experience of the Department in matters relating to game protection. Special trips for similar purposes were made to Connecticut, Delaware, New Jersey, New York, Tennessee, Virginia, and Vermont.

Assistance was rendered also to California, Missouri, Texas, and Wisconsin. Two visits were made to Pennsylvania, on request of the State game officials, in connection with a prosecution for selling cardinals (or redbirds) and mocking birds in violation of the State law. Two purposes are subserved by work of this character—the hands of State officials are strengthened by the support of the Department, and the Department is brought into closer relationship with State officers and organizations.

INTERSTATE COMMERCE IN GAME.

The seizure in Los Angeles in November, 1906, of a carload of hides and horns of elk afforded evidence of the wholesale manner in which animals have been slaughtered for trophies or for tusks in some of the Western States in recent years. The Department was at once appealed to for assistance, and through the cooperation of officers of the Forest Service, the State wardens of Idaho and Wyoming, and the county warden of Los Angeles County, Cal., considerable evidence regarding the operations of the hunters was brought together. Two noted tusk hunters had been arrested at the time of the seizure and were held for the action of the Federal grand jury in Idaho on charges of shipping the trophies from St. Anthony and Sugar City, Idaho, to Los Angeles, in violation of the Lacey Act. Indictments were obtained at the April term of court at Pocatello and the two defendants entered pleas of guilty and were fined $200 each, the maximum fine under the Lacey Act.

The case, however, brought to light violations of several other laws besides the Lacey Act, including the Yellowstone Park act, the Wyoming law prohibiting killing and export of game, the law of Idaho prohibiting shipment of hides from the State, and the California law prohibiting possession of elk. Vigorous prosecution of these offenders under the various laws will doubtless go far toward discouraging such violations of the law.

The warden of Stump Lake Reservation having reported that he had placed under arrest three of the poachers who had been operating on this reservation, the matter was taken up with the Department of Justice and pushed to a conclusion. The offenders were promptly convicted and were fined $25. It is hoped that this action will materially aid in preventing further poaching on this reservation.

Investigation of conditions in the Southwest has not yet been made, stress of other work and the lack of funds making impossible a much-needed personal study of the principal field of illegal shipments of game. If possible, however, the investigation will be made this year and means will be devised to lessen, if not entirely stop, the illegal trade now prevailing.

ROUTINE WORK.

As the field work increases and includes new lines of investigation, the amount of routine work increases correspondingly. This consists of correspondence; the preparation of reports and bulletins on special subjects for publication; the identification and labeling of specimens, including those collected by our own assistants and also

those sent in for identification by colleges, museums, and various individuals; the storage and care of field collections; cataloguing and identifying the contents of bird stomachs; tabulating field reports; sorting and filing published matter for future reference; mapping distribution of birds, mammals, and plants; supplying the needs of field assistants; developing photographic plates and making prints therefrom; compiling game laws; issuing permits for the entry of foreign mammals and birds, and for the export of trophies and specimens from Alaska, and cooperation in enforcing the various provisions of the act of Congress of May 25, 1900. The letters received during the year numbered about 7,400; the letters written during the year numbered 6,200, and about 700 migration schedules were sent out to observers. During the year nearly 900 negatives were made, illustrating and furnishing a most valuable supplementary record of the field work of the Survey. The collection now numbers about 11,000 negatives.

PUBLICATIONS.

The publications for the year include 1 number of North American Fauna, 2 Bulletins, 4 Yearbook articles, 2 Farmers' Bulletins, 8 Circulars, the Report of the Acting Chief for 1906, and 9 reprints of former publications.

The number of North American Fauna (No. 26) contains a Revision of the Skunks of the Genus Spilogale, by Arthur H. Howell.

The Bulletins are: No. 26, Distribution and Migration of North American Ducks, Geese, and Swans, by Wells W. Cooke; No. 27, The North American Eagles and Their Economic Relations, by Harry C. Oberholser.

The Farmers' Bulletins are: Methods of Destroying Rats, by David E. Lantz; Game Laws for 1906, by T. S. Palmer and R. W. Williams, jr.

The articles in the Yearbook are entitled: Cage Bird Traffic of the United States, by Henry Oldys; Birds that eat Scale Insects, by W. L. McAtee; The Game Warden of To-day, by R. W. Williams, jr.; Game Protection in 1906, by T. S. Palmer.

The titles of the Circulars are: No. 53, Directory of State officials and organizations connected with the Protection of Birds and Game, 1906, by T. S. Palmer; No. 54, Statistics of Hunting Licenses, by T. S. Palmer; No. 55, Directions for the Destruction of Wolves and Coyotes, by Vernon Bailey; No. 56, Value of Swallows as Insect Destroyers, by H. W. Henshaw; No. 57, Birds Useful in the War Against the Cotton Boll Weevil, by H. W. Henshaw; No. 58, Destruction of Deer by the Northern Timber Wolf, by Vernon Bailey; No. 59, Game Protection in Florida, by R. W. Williams, jr.; No. 60, List of Publications of the Biological Survey.

The reprints of former publications issued are as follows: Bulletin 21, The Bobwhite and other Quails of the United States in Their Economic Relations, by Sylvester D. Judd; Yearbook articles: Four Common Birds of the Farm and Garden, by Sylvester D. Judd (two reprints); Federal Game Protection, by T. S. Palmer; Birds as Weed Destroyers, by Sylvester D. Judd; The Blue Jay and Its Food, by F. E. L. Beal; Meadow Mice in Relation to Agriculture, by D. E. Lantz; The Danger of Introducing Animals and Birds, by

T. S. Palmer; Some New Facts about the Migration of Birds, by Wells W. Cooke; Game Protection in 1905, by T. S. Palmer.

Reprints of the following Circulars were issued: No. 17, Bird Day in the Schools, by T. S. Palmer; No. 56, Value of Swallows as Insect Destroyers, by H. W. Henshaw; No. 57, Birds Useful in the War Against the Cotton Boll Weevil, by H. W. Henshaw.

In addition to the above a report, entitled "Wolves in Relation to Stock, Game, and the National Forests," was prepared by Vernon Bailey, at the request of and in cooperation with the Forest Service, and published as Bulletin No. 72 of that Bureau.

OUTLINE OF WORK FOR 1908.

ECONOMIC ORNITHOLOGY AND MAMMALOGY.

Work in economic mammalogy will be continued along much the same lines as in previous years. It is intended to continue experiments with a view of preventing or greatly limiting the damage to stock by wolves and coyotes, including experiments for the purpose of devising a cheap and effective wolf and coyote proof fence.

Owing to the sudden irruption of enormous numbers of field mice in some of the alfalfa fields of western Nevada, the discovery of a cheap and effective method of destroying these pests by wholesale is important. Hence field experiments with traps, poisons, and gases will be conducted for the purpose of ridding the infested areas of these animals. Laboratory and field experiments in cooperation with the Bureau of Animal Industry, to test the efficiency of an imported virus for the destruction of rats and mice, will be continued. In connection with this work, attempts will be made by means of field investigations to obtain cultures of diseases known to prevail at irregular periods among rabbits, field mice, and other rodents. The field and laboratory experiments with a bacterial virus for the destruction of grain-eating ground squirrels, in cooperation with the State experiment station at Pullman, Wash., will be continued, as also experiments with mineral and other poisons for the same purpose.

Three preliminary reports on the relation of birds to the boll weevil have been issued. The work will be continued in Texas and Louisiana, and will be extended into Mississippi, should the pest reach that State, as now appears probable.

Field work in connection with the investigation of the food of California birds, with special relation to the protection of fruit-bearing trees, has been practically completed for the northern part of the State, and examination of the stomachs necessary for completing Part II of the final report on the subject is progressing satisfactorily. Part I is now in press and will be issued during the year. Work of the same nature will be pursued in Oregon and Washington.

Supplemental investigations in relation to the English sparrow are being carried on and will be continued during the year. It appears probable that the pest has about reached the limits of its extension. The limit of its increase in the regions where it has become established also seem to have been reached. Apart from its destructive raids on small fruits and grain, the bird everywhere does much harm by driving away our insectivorous birds, and requests

are constantly being received from farmers and other landowners asking for means for destroying it on a large scale.

Of late years the diminution in the numbers of our game and water birds has been the occasion of much concern among sportsmen and others interested in the wild life of our country. An increasing number of those who seek needed recreation in the pursuit of game, and the demand for game as food, which constantly increases with increasing population, are chiefly responsible for this poverty of game birds in regions where formerly they teemed. As a result of the pressing demand for more agricultural land, projects are now being formed for the drainage of extensive swampy areas, as the Dismal Swamp of Virginia, the Everglades of Florida, and other similar tracts. The conversion of swamps into land fit for agriculture is sure to result in still further reducing the numbers of certain species of ducks, geese, and waders, and in greatly hastening their threatened extinction, both by destroying their natural food supply and their nesting grounds. It is important that a study of the local faunas of these regions and of local conditions should be made with a view to the discovery of means of averting the threatened harm to our native waterfowl. In this connection attention is directed to extensive irrigation projects now being carried out in the Western States. Lakes are being formed as feeders to irrigation canals, and it may prove practicable to offset in part, at least, the destruction of present breeding grounds of ducks and geese by the utilization of artificial lakes. The problems presented are likely to prove comparatively simple and of easy solution. By planting certain rushes and grasses around the margins of artificial lakes conditions may be produced closely approximating natural ones. The presence of suitable nesting sites, a supply of natural food, and protection from man are all that are necessary to assure the colonization of such lakes by waterfowl. In this way irrigation ponds and lakes may be made natural preserves and resorts for our waterfowl and waders, and the threatened extermination of certain species may be averted.

Beaver farming.—The beaver, formerly one of the most widely distributed of our mammals and numerous over extensive regions, has everywhere diminished in numbers and in many localities is extinct. Its fur became a valuable article of commerce almost from the time of the first settlements, and it is no less valuable now than formerly. Several States already have laws protecting the beaver, and the natural results of protection are seen to follow in a speedy increase of numbers. No doubt, under protective laws carefully enforced, the animal in time can be induced to reoccupy much of its old territory and thus become a permanent source of profit. So few and small have the colonies become, however, owing to ruthless and persistent trapping, that to insure the perpetuation of this valuable fur-bearing animal, it will probably be necessary to go further than mere protection and to colonize suitable ponds and streams. Experiments in this direction by private parties on a small scale have already proved successful, and in view of future commercial possibilities it is believed that the industry is of sufficient importance to warrant the comparatively small outlay necessary for experiments on a larger scale.

In addition to its commercial value, the beaver may prove of service as an aid in the storage of water along the courses of tributary mountain streams, owing to its well-known habit of damming such streams for the express purpose of forming artificial ponds and lakelets, which act as natural storage basins.

FOX FARMING AND MINK FARMING.—The value of our fur bearers constantly increases as the natural supply of furs diminishes under an ever-increasing demand. Many experiments have been made from time to time in raising foxes for their skins. Some of these have been rewarded with a fair measure of success. Others have failed from lack of capital, failure to supply the proper food, want of the necessary care, or other causes. Several of the fox farms of Maine and the Canadian provinces were visited during the past season by an assistant of the Survey, with a view to a thorough study of the problem. It is believed that the raising of foxes for their fur is entirely practicable and that it can be made lucrative in many localities. It is intended to continue this investigation and to undertake practical experiments in the rearing of mink in confinement for their furs. While by no means so valuable as the higher grade of fox skins, the fur of the mink is sufficiently valuable to insure good profits from their culture. Most of the experiments in raising mink have proved unsuccessful, more, however, from lack of the proper food and care of the animals in confinement than from difficulties inherent in the nature of the undertaking.

DIKE BORERS.—In cooperation with the Reclamation Service it is intended to investigate the nature and extent of the damage done to dikes by certain rodents, such as muskrats and gophers, with a view to the discovery of methods of prevention. Much damage to irrigation dikes has already been done by these animals, and extensive irrigation projects now under way in various parts of the West invest the subject with growing importance.

GEOGRAPHIC DISTRIBUTION.

Field work will be continued in several of the Western States and Territories. The surveys of New Mexico and California already are well advanced. The survey for a zone map of Colorado also is approaching completion. In addition, field work is planned for the present year in parts of Arizona, Oregon, Montana, and North Dakota.

Several assistants will be detailed to continue investigations already begun of special economic problems. These include the relation of birds to the boll weevil in the cotton belt; the distribution and abundance of water fowl in the marshes of California; an economic report on the birds of Texas; and continued cooperation with the Forest Service in the study of the wolf problem on the stock ranges. Work on a report on the shore birds will be continued, and it is hoped will be ready for the press before the end of the year. The compilation of data on the migration of birds regularly received from a large number of correspondents and from published records will be continued. Whenever time can be spared from other work the mapping of the distribution of birds and mammals will be carried on.

In addition to the lines of work already detailed there is another which each year takes more time. This is the examination and identification of specimens sent in for the purpose by colleges and museums, by farmers, fruit raisers, and others interested in knowing the names of the birds and mammals that live about their homes, and which in many instances are beneficial or injurious to their crops.

GAME PROTECTION.

IMPORTATION.

The plan of making every unused permit returnable to the Department within thirty days, put into operation at the end of the year, will be continued, and in combination with the return by collectors of customs of used permits, adopted last year, will afford a serviceable check on the number of birds and animals entering the country. The consolidated card index of species imported since the Lacey Act became effective, June 1, 1900, now practically completed, will be kept up to date and will furnish a valuable record.

Attention will be devoted to improving the service on the Pacific coast. Withdrawal of the direct line of steamers from Australia to San Francisco has resulted in making Victoria, British Columbia, the port of entry for Australian birds. On this account the inspection service at Puget Sound ports of entry needs to be strengthened.

The conditions of the import trade at San Francisco will be examined, and efforts will be made to secure more exact information as to parrots and other birds entered without permit, particularly those brought from Mexico. The work of ascertaining the dates of earliest entry of different species into this country will be continued.

INTERSTATE COMMERCE IN GAME.

Duties concerned with interstate commerce in game constitute the main part of the field work undertaken in connection with the preservation of game. During the latter part of the summer of 1907 a personal examination will be made of conditions governing illegal shipments of game in the Southwest. The virtual repeal of the machinery for enforcing the Missouri law this year greatly increases the difficulty of preventing violations of the Federal law in neighboring States, particularly in Illinois, Nebraska, Kansas, Oklahoma, Arkansas, and Texas, and the main field work of the year will be directed to this region. The new laws of Alabama and Texas will demand closer supervision of matters relating to game protection in the South.

Cooperation will be had with Western States in preventing illegal traffic in hides, horns, and tusks of big game, in following up violations already reported to the Department, and in prosecuting cases already begun. This field of labor derives added importance from the fact that the laws passed by the Wyoming legislature this year offer rewards for the apprehension of illegal killers of big game. Since nearly all such illegal destruction occurs in the National Forests the Federal Government is directly concerned.

Attention is again called to the necessity for the creation of three districts, each with a supervisor, with headquarters at Chicago, St. Louis, and Baltimore. The cost of such service would not exceed $2,000 per annum, and the result would be the establishment

of a thorough and effective means of enforcing the provisions of the Lacey Act. The work has been carried on as actively and vigorously as possible by the present limited force and with the present appropriations, but it has been impossible to conduct it with the proper degree of thoroughness. In dealing with local conditions a representative of the Department on the spot is worth a dozen correspondents, however willing or capable. The results of efforts made under present conditions have been good as far as they go, but they do not suffice to interpose a systematic and effective check on violations of the Lacey Act. As before pointed out, the services of the suggested supervisors would not be required during the entire year. Their services would be in demand chiefly during the open season for game, a period not generally exceeding six months and in many instances much shorter. It is earnestly hoped that the funds needed may be forthcoming.

GAME AND BIRD REFUGES.

Supervision of the bird reservations established by the President will continue in cooperation with the National Association of Audubon Societies. This organization is making a systematic survey of the Louisiana coast from the mouth of the Mississippi River westward and also a reconnoissance of points along the South Carolina coast where birds are likely to breed. The purpose of these investigations is to locate such breeding colonies of birds as can be protected by the establishment of Federal bird preserves or of refuges maintained under State auspices. It is hoped that in the near future, as one result of these investigations, two additional Federal bird reservations will be established on the Gulf coast.

Investigation of public preserves, both in the United States and abroad, will be continued. Exigencies arising in connection with the preservation of birds and game require the constant extension of the "game-refuge" or "bird-sanctuary" idea, and study of the most effective methods is necessary. As soon as possible the results of these researches will be published.

The work begun two or three years ago of collecting information concerning private preserves will be further prosecuted with a view to publication during the year. New legislation of several of the States in 1907 shows the importance of this investigation. Vermont, New York, Pennsylvania, North Carolina, Indiana, Illinois, and California passed laws relating directly or indirectly to private preserves.

INFORMATION CONCERNING GAME.

It is the present purpose, if limited time and force permit, to issue publications during the coming year that will inform the public of practically all provisions of the game laws of the various States and Territories. Those relating to seasons, sale, shipment, and licenses will be covered by the usual annual summary of these provisions; those relating to enforcement will appear in a bulletin now ready for publication. In addition to these it is hoped to prepare and publish the provisions concerning nongame birds and those relating to prohibited methods of hunting. The four volumes will then furnish a complete compendium of the essentials of the game laws of the United States.

Besides knowledge of existing laws, it is desirable that those concerned with the enforcement of legal enactments should have ready

access to judicial decisions in cases that have arisen under the game laws; work on the index of such decisions, now nearly completed, will be pushed as rapidly as possible, and the completed index will be placed in the hands of the printer at the earliest possible moment.

Various important matters connected with game will form the subjects of other publications. Statistics of fatal hunting accidents during the past year have been secured and will soon be prepared for the press. Efforts will be made to devise a feasible plan of ascertaining approximately the number of certain species of game remaining in each of the States and Territories and the number annually killed. Attention will be directed especially to the present distribution of the antelope, wild turkey, prairie chicken, and several others whose numbers are rapidly decreasing or whose range is undergoing a change.

It is the desire of the Department to cooperate with and assist those States especially that have no organized State warden service, by systematically distributing publications to individuals and organizations interested in game, and by study of local conditions and of the special needs in each case. The recent publication of a brief résumé of the course of game protection in Florida was along this line. A similar sketch of game protection in Virginia is in course of preparation and will be published soon.

RECOMMENDATIONS.

In submitting estimates for the fiscal year 1909 the following recommendations are made:

(1) That an increase of $2,200 in the statutory roll be granted, to be applied as follows: One thousand two hundred dollars for an additional clerk, whose services are needed in the work of game protection; $1,000 for the employment of an additional clerk whose services are needed in the work on economic mammalogy and ornithology.

(2) That an increase of $15,750 in the lump appropriation be granted, to be applied as follows: One thousand five hundred dollars for the employment of an additional scientific assistant in crop and life zone investigations; $1,000 for the employment of one additional assistant in the work of economic ornithology and mammalogy; $1,200 for the employment of one district supervisor; $1,000 for traveling expenses for district supervisor; $1,000 for field investigations in relation to methods of combating the ravages of rodent mammals (especially ground squirrels), including studies of epidemic bacterial diseases; $750 for field investigations in relation to the control of the cotton-boll weevil; $500 for experiments and field work in relation to fox farming in Alaska and elsewhere; $300 for field work in the Eastern States in relation to damage to berries and small fruits by birds; $1,000 for field work in relation to damage to stock by wolves, coyotes, and other predaceous animals; $1,000 for field investigations of the distribution of the diseases of quail and other game birds; $500 for traveling expenses in connection with game protection; $5,000 for field work in locating the boundaries of crop belts and for work on geographic distribution, chiefly in California, Colorado, New Mexico, Utah, and Arizona; and $1,000 for expenses of inspection of imported birds and mammals.

REPORT OF THE CHIEF OF THE DIVISION OF ACCOUNTS AND DISBURSEMENTS.

U. S. DEPARTMENT OF AGRICULTURE,
DIVISION OF ACCOUNTS AND DISBURSEMENTS,
Washington, D. C., October 1, 1907.

SIR: I have the honor to submit herewith a report of the work of the Division of Accounts and Disbursements for the fiscal year ended June 30, 1907.

Very respectfully, A. ZAPPONE,
Chief of Division.

Hon. JAMES WILSON, *Secretary.*

IMPORTANCE OF WORK.

To appreciate properly the present importance of this Division and the rapidity with which its responsibilities are increasing it is only necessary to consider the growth of the Department as a whole, as shown by the appropriations for agricultural investigations and related purposes since its inception in 1839. In that year $1,000 was set aside by Congress "for the purpose of collecting and distributing seeds, prosecuting agricultural investigations, and procuring agricultural statistics." In 1849 the appropriation had increased to $3,500 and in 1859 to $60,000. In 1862 the importance and value of the work, until then prosecuted under the direction of the Commissioner of Patents, had secured such recognition that a department headed by an independent Commissioner was created for its continuance. In 1869 the agricultural appropriation amounted to $172,593, in 1879 to $206,400, and in 1889 to $1,034,480, by which time the administration of the financial affairs of the Department had developed such importance that a separate division became necessary to insure proper disbursement of the funds set aside by Congress for the needs of the Department. In 1899 the annual appropriation had increased to $2,829,702, but during the past ten years the growth of the Department has been rapid and the benefits to the public have increased correspondingly. The regular appropriation bills of the Department for ordinary and routine expenses from 1903 to 1908, inclusive, show an average annual percentage of increase of 12.9.

The amount estimated for the fiscal year ending June 30, 1909, in the regular appropriation bill is $10,666,351, which includes $720,000 for agricultural experiment stations. This is an apparent increase of $1,459,061, or 15.8 per cent; but, taking into consideration the loss of revenues derived by the Forest Service from the sales of timber, etc. (estimated at $1,500,000 annually), which heretofore have been

used for maintenance of the reserves, but which, beginning on July 1, 1908, are required by law to be deposited in the Treasury to "Miscellaneous receipts," it is in reality no increase. In addition there will be a permanent appropriation of $3,000,000 for meat inspection, and an item of $550,000 in the sundry civil bill for printing and binding for this Department, to be done under the Public Printer, making a grand total of $14,216,351.

The proper disbursement of the great sums being appropriated annually for the use of the Department at the present time involves the careful scrutiny, administrative examination, and audit of more than 50,000 accounts annually and the issue of about 75,000 checks. This duty, which is performed by the Division of Accounts and Disbursements, insures a conformity of the expenditures to the requirements of the appropriation acts and the regulations of the Treasury Department, in addition to which absolute economy of disbursement is secured by the departmental system of project filing which was developed over two years ago for the purpose of insuring judicious and careful expenditure and of rendering any duplication of work in the several bureaus absolutely impossible. In the operation of this system each chief of Bureau files a detailed statement every six months regarding each project in operation or contemplated in his particular Bureau. With these statements before him, the head of the Department is enabled to coordinate and direct the work of the several Bureaus to the greatest possible advantage. Over 1,300 projects are on file, and no new projects are embarked upon without being first brought to the attention of the head of the Department in the manner described. It may be remarked in this connection that the system of project filing here outlined is peculiar to and entirely original with the Department of Agriculture.

During the fiscal year ended June 30, 1907, the Congressional Committee on Expenditures in the Department of Agriculture carefully investigated the expenditures for the preceding fiscal year. In the course of this investigation all the higher officials of the Department appeared before the committee and under oath explained in detail the character and object of the various lines of work being prosecuted by the Department. It is gratifying to state that as a result of the examination every penny of the agricultural appropriations was properly accounted for, the work and discipline of the Department received high commendation, and it was shown that the annual value of the Department of Agriculture to the general public at the present time is nearly a quarter of a billion dollars. As the annual appropriation for the Department is about $14,000,000, it will be seen that this is a return of about $16.50 for every dollar appropriated by Congress.

APPROPRIATIONS, EXPENDITURES, ETC.

The total appropriations for the Department for the year ended June 30, 1907, amounted to $11,557,691.36, not including $720,000 and $336,000, appropriated for the several State agricultural experiment stations. Of this sum ($11,557,691.36) $8,586,209.23 was disbursed prior to the close of the year, leaving a balance of $2,971,482.13, nearly all of which is covered by outstanding liabilities. *Supplemental* accounts for the year 1906 were also paid, amount-

ing to $438,186.05. The unexpended balances for the year 1905, amounting to $74,336, were finally covered into the Treasury on June 30, 1907.

There were received, audited, and paid 50,000 accounts, as follows: Weather Bureau, 11,516, amounting to $1,159,194.91; Bureau of Animal Industry, 12,796, amounting to $2,686,267.67; all other bureaus and divisions, 25,688, amounting to $4,740,746.65, a total of $8,586,209.23. In payment of these accounts 75,000 checks were drawn on the Treasury at Washington and subtreasuries at New York and at Chicago.

There were also audited and sent to the Treasury Department for payment 584 accounts, including 364 for the Weather Bureau.

LOST CHECKS.

During the year 25 checks were lost in transit through the mails or by the payees.

REQUISITIONS, LETTERS, AND REQUESTS.

One hundred requisitions were drawn on the Treasury, aggregating $7,380,737.21 (this does not include Forest Service).

The number of requisitions issued for supplies was 17,080.

The number of letters of authorization for travel was 2,928.

The number of letters written and received in the ordinary transaction of business was 56,500.

The number of requests for passenger transportation was 14,875.

The number of requests on the Quartermaster-General for the transportation of Government property was 2,773.

The amount expended for telegraphing and telephoning by the Weather Bureau, including the West Indian cable service, was $235,139.59.

NEW BUILDINGS FOR DEPARTMENT.

Up to the present time Congress has appropriated for the purpose $1,500,000, of which sum there has been expended $1,116,849.77, leaving a balance on September 10, 1907, of $383,150.23.

TEMPORARY SPECIAL DISBURSING AGENTS.

There were 17 temporary special disbursing agents appointed during the year, and the sum of $85,428.13 from the appropriations of the Department was advanced, requiring the issuance of 57 requisitions upon the Treasury. All accounts of temporary special disbursing agents of this Department are given an administrative examination in this Division before being forwarded to the Treasury Department for final audit and settlement.

APPROPRIATIONS, DISBURSEMENTS, AND UNEXPENDED BALANCES FOR THE FISCAL YEAR 1907.

The table following shows for the fiscal year the amounts appropriated, disbursed, and unexpended:

Object.		Total amount appropriated.	Amount disbursed.	Balance of appropriation on hand.
Salaries, Department of Agriculture, officers and clerks	$750,170	$757,770.00	$730,481.65	$19,688.35
Salaries, extra labor	7,600		6,355.73	1,244.27
Contingent expenses		37,000.00	33,014.40	3,985.60
Library		10,000.00	8,046.96	1,953.04
Bureau of Animal Industry:				
General expenses	$809,700	862,200.00	621,918.25	187,781.75
Rent of buildings	2,500		2,118.50	381.50
Southern dairy work	20,000		15,647.09	4,352.91
Diseases of domestic animals, Minnesota	5,000		1,480.33	3,519.67
Animal breeding and feeding	25,000		18,127.92	6,872.08
Meat inspection		3,000,000.00	1,932,208.19	1,067,791.81
Eradicating cattle ticks:				
1907		82,500.00	80,579.29	1,920.71
1907 and 1908		25,000.00	14,188.10	10,811.90
Bureau of Plant Industry:				
General expenses	$480,406.28	495,260.00	423,760.07	56,646.21
Rent and repairs	11,300.00		10,106.75	1,193.25
Ozark Mountain investigations	3,553.72		3,330.49	223.23
Grain investigations		15,000.00	13,582.80	1,417.20
Improving roads		3,500.00	3,472.00	28.00
Purchase and distribution of valuable seeds	$205,140	242,920.00	180,871.16	24,268.84
Foreign seed and plant introduction	35,780		27,249.80	8,530.20
Erection of building at Chico, Cal.	2,000		2,000.00	.....
Cotton boll weevil investigations:				
1907		105,000.00	91,545.68	13,454.32
1907 and 1908		40,000.00	4,367.58	35,632.42
Bureau of Chemistry:				
Laboratory		145,920.00	131,530.41	14,389.59
Enforcement of the food and drugs act		250,000.00	36,217.41	213,782.59
Bureau of Soils:				
Soils investigations	$181,000	185,000.00	168,651.81	12,348.19
Rent of buildings	4,000		3,483.33	516.67
Bureau of Entomology:				
Entomological investigations	$70,000	75,000.00	65,147.09	4,852.91
White fly investigations	5,000		4,538.24	461.76
Cotton boll weevil investigations		85,000.00	58,598.72	26,401.28
Preventing spread of moths:				
1907		82,500.00	80,309.35	2,190.65
1907 and 1908		150,000.00	8,592.73	141,407.27
Bureau of Biological Survey:				
Biological investigations		44,420.00	40,844.51	3,575.49
Division of Publications:				
Publications, Department of Agriculture, Farmers' Bulletins	$98,750	132,250.00	91,175.67	7,574.33
Artists, etc.	3,500		3,224.80	275.20
Labor, etc.	30,000		27,546.27	2,453.73
Bureau of Statistics:				
Collecting agricultural statistics	$108,000	112,900.00	86,756.05	21,243.95
Foreign markets investigations	4,900		4,852.95	47.05
Office of Experiment Stations:				
Agricultural Experiment Stations ($803,500) [a]	$25,500	83,500.00	24,467.75	1,032.25
Farmers' institutes	5,000		4,105.95	894.05
Station at Alaska, including $3,000 for purchase of live stock	18,000		17,968.89	31.11
Station at Hawaii, including $5,000 for water supply	20,000		20,000.00	.....
Station at Porto Rico	15,000		15,000.00	.....
Nutrition investigations		20,000.00	16,637.32	3,362.68
Irrigation investigations		122,200.00	103,002.80	19,197.20
Office of Public Roads:				
Public road inquiries		57,660.00	49,975.45	7,684.55
Total for main Department, exclusive of Weather Bureau and Forest Service		7,222,500.00	5,287,080.24	1,35,419.76
WEATHER BUREAU.				
Salaries		194,690.00	193,918.11	771.89
Fuel, lights, and repairs		10,000.00	9,356.14	643.86
Contingent expenses		10,000.00	8,915.70	1,084.30
Salaries, station employees		541,550.00	497,110.47	44,439.53
General expenses		630,000.00	425,736.18	204,263.82
Buildings		53,000.00	24,158.31	28,841.69
Total		1,439,240.00	1,159,194.91	280,045.09

[a] Of this amount $720 000 was paid directly to the experiment stations from the Treasury Department.

Object.		Total amount appropriated.	Amount disbursed.	Balance of appropriation on hand.
FOREST SERVICE.				
Salaries, officers and clerks		$112,860.00	$102,826.06	$10,033.94
General expenses	$849,640	887,140.00	641,033.95	208,606.05
Rent	35,000		20,266.62	14,733.38
Building on Dismal River Forest Reserve	2,500		2,475.22	24.78
Wichita Forest and Game Preserve		15,000.00	.....	15,000.00
Survey and report on Appalachian and White Mountain watersheds, 1907 and 1908		25,000.00	857.14	24,142.86
Administration, etc., of National Forests, 1907 and 1908		125,000.00	6,213.21	118,786.79
Total (regular appropriations)		1,165,000.00	773,672.20	391,327.80
Total of all regular appropriations for entire Department		9,826,740.00	7,219,947.35	2,606,792.65
SPECIAL APPROPRIATIONS.				
Pomological investigations, fund from sale of fruits and vegetables		3,541.28	1,761.88	1,779.40
Agricultural experiment stations, fund from sale of card indexes		65.15	.....	65.15
Buildings, Department of Agriculture	$250,000 700,000			
Balance available on July 1, 1906	$480,934.68	780,934.68	535,594.61	245,340.07
Sundry civil act June 30, 1906	300,000.00			
Administration, etc., Forest Reserves		925,000.00	812,293.34	112,706.66
Cooperative work, forest investigations		21,410.25	16,612.05	4,798.20
Grand total of all appropriations available for the Department for the fiscal year 1907		11,557,691.36	8,586,209.23	2,971,482.13

MONTHLY CHECK STATEMENTS.

The check statements submitted by the Treasury and subtreasuries were compared with the checks issued by this Division, and the amounts verified.

ANNUAL SUPPLIES.

Annual supplies for the use of the various branches of the Department were freely advertised for in the usual manner and at a uniform time with the other Executive Departments, and contracts were made covering as nearly as practicable all the lines of supplies needed during the year. The method pursued by this Department in advertising for supplies and in obtaining competition thereon is thought to accomplish very fully the object sought. Advertising is done not only through the medium of daily newspapers in the large cities for a certain period before the supplies are needed, but hundreds of copies of the advertisement in the form of printed slips are mailed to known dealers in the wares required. All bids are submitted to and are passed upon by a board of award acting under the instructions and by the authority of the Secretary. Supplies aggregating an amount less than $50 may, under the act of March 1, 1899, be purchased in the open market.

PUBLIC MONEYS RECEIVED FROM VARIOUS SOURCES.

There were received from various sources and deposited in the Treasury to the credit of the proper funds the following sums:

Sales of condemned property	$7,645.67
Sales of card index	225.95
Sales of publications, Weather Bureau	505.07
Telegraph-line receipts, Weather Bureau	3,403.46
Sales of experimental shipments of fruits	307.41
Sales of products, agricultural station, Hawaii	423.70

Sales of products, agricultural station, Porto Rico	$2,080.91
Sales of products, agricultural station, Alaska	4,854.86
Sales of copies of the Library card index	15.58
Total	19,462.61

In this connection it is thought desirable to explain the method pursued in receiving and disposing of the moneys pertaining to the several funds.

The proceeds of "condemned property" are covered into the Treasury to the credit of "Miscellaneous receipts," under section 3618 of the Revised Statutes.

The moneys received from the sale of "card index of agricultural literature" prepared by the Office of Experiment Stations is covered into the Treasury to the credit of that appropriation, as provided by the appropriation act.

Moneys derived from the sales of products at the insular stations in Hawaii, Porto Rico, and Alaska are used for the maintenance of those stations.

Up to June 30, 1907, the moneys derived from the sales of "publications" issued by the Weather Bureau were deposited in the Treasury to the credit of the appropriation "General expenses" of that Bureau, under section 227 of the Revised Statutes. Since July 1, 1907, these moneys will be deposited to "Miscellaneous receipts," in accordance with the provision in the act making appropriations for this Department for the fiscal year ending June 30, 1908. (34 Stat. L., p. 1258.)

"Seacoast telegraph line receipts" are covered into the Treasury under act of March 3, 1883. (22 Stat. L., 616.)

In acknowledgment of each deposit of funds the Treasurer issues to the depositor a duplicate certificate of deposit. The number of this certificate is entered as part of the transaction, and the certificate is filed in this Division.

These moneys are forwarded to the Division of Accounts and Disbursements from the various Bureaus, Divisions, and Offices of the Department, accompanied by a letter, or specially printed form, in duplicate, explaining from whence the money was derived. The duplicate is receipted by the Chief of this Division and returned to the sender. The original is placed in the files of this Division as a voucher. The amount received is entered in a book with a description of the transaction copied from the letter of transmittal. If in the form of cash or postal money order, it is so stated in the entry, and if by check or draft a minute description is given, with name of payor, payee, indorser, name of bank, number and date of check, etc. The law requires that money so received shall be deposited in the Treasury within thirty days after its receipt by a Government officer. The practice in this office is to deposit all sums as soon as practicable after they are received, unless of an insignificant amount. The Chief of this Division, having no authority to do otherwise, accepts the statements accompanying sums of money submitted to him, assuming them to be in strict accordance with the facts.

ACCOUNTS FOR THE FISCAL YEAR 1905 FINALLY CLOSED.

As required by section 5, legislative act, approved June 20, 1874 (18 Stat. L., 110–111), the unexpended balances of the appropriations for the year 1905 were finally covered into the Treasury on June 30, 1907, and carried to the surplus fund, as follows:

Amount of unexpended balances for fiscal year 1905 turned into the Treasury.

Object.		Amount appropriated.	Amount disbursed.	Amount unexpended.
Salaries, Department of Agriculture, officers, and clerks	$481,300	$482,300	$470,998.89	$10,301.11
Extra laborers	1,000		971.66	28.34
Bureau of Animal Industry:				
General expenses, including $1,800 for rent of building	1,400,000	1,425,000	1,399,227.96	772.04
Animal breeding and feeding	25,000		20,540.67	4,459.33
To eradicate contagious diseases of animals, 1904-1905		250,000	248,980.79	1,019.21
Bureau of Plant Industry:				
Vegetable pathological investigations	$145,000	150,000	145,705.01	.....
Rent of building	3,000		2,294.99	.....
Vegetable pathological investigations, 1904-1905	2,000		2,000.00	.....
Rent of quarters (deficiency)		2,500	2,485.00	15.00
Pomological investigations		43,500	41,280.58	2,219.42
Botanical investigations and experiments	$64,500	67,500	63,914.24	585.76
Rent of building	3,000		3,000.00	.....
Grass and forage plant investigations	40,500	42,500	40,012.04	487.96
Rent of building	2,000		1,500.00	500.00
Experimental gardens and grounds		25,000	24,725.40	274.60
Greenhouses, 1904-1905		25,000	24,995.32	4.68
Arlington Experimental Farm		20,000	19,838.70	161.30
Tea culture investigations		10,000	8,387.15	1,612.85
Purchase and distribution of valuable seeds	$242,500	290,000	240,379.71	2,120.29
Foreign seed and plant introduction	40,000		39,687.44	312.56
Repairs to building	7,500		4,000.00	3,500.00
Investigating production of domestic sugar		7,500	7,222.14	277.86
Bureau of Forestry:				
Forestry investigations, including $15,500 for rent of building		388,000	386,618.32	1,381.68
Protection of forest reserves		50,000	49,025.23	974.77
Testing timbers, Louisiana Purchase Exposition, St. Louis, Mo. (deficiency act)		10,000	9,985.82	14.18
Bureau of Chemistry:				
Laboratory, including $15,000 for table sirup	$105,000	135,000	103,693.95	1,306.05
Laboratory, 1904-1905	15,000		14,716.95	283.05
Laboratory, road materials	15,000		14,802.99	197.01
Bureau of Soils:				
Soil investigations, including $6,000 for rent of building		170,000	168,638.84	1,361.16
Entomological investigations		70,000	69,124.44	875.56
Cotton boll weevil investigations, 1904-1905		250,000	220,685.40	29,314.60
Biological investigations	$33,000	34,000	32,937.70	62.30
Biological investigations, 1904-1905, care of elk	1,000		807.14	192.86
Publications, Farmers' Bulletins	105,000	210,000	104,885.16	114.84
Artists, etc	15,000		14,635.28	364.72
Labor, etc	89,000		88,985.64	14.36
Labor, etc., 1904-1905	1,000		430.64	569.36
Collecting agricultural statistics	132,000	139,500	130,539.73	1,460.27
Foreign market investigations	7,500		6,069.72	1,430.28
Library		10,000	9,640.28	359.72
Contingent expenses		37,000	36,963.20	36.80
Agricultural experiment stations ($810,000[a])	$40,000	90,000	39,703.10	296.90
Stations of Alaska	15,000		15,000.00	.....
Stations of Hawaii	15,000		15,000.00	.....
Stations of Porto Rico	15,000		15,000.00	.....
Farmers' institute	5,000		4,603.53	396.47
Nutrition investigations		20,000	19,976.98	23.02
Irrigation investigations		67,500	67,416.35	83.65
Public Road Inquiries		35,000	34,319.03	680.97
Total		4,556,800	4,486,353.11	70,446.89
WEATHER BUREAU.				
Salaries		180,440	180,225.57	214.43
Fuel, lights, and repairs		8,000	7,979.20	20.80
Contingent expenses		10,000	9,702.60	297.40
General expenses, salaries	$492,300	1,064,300	491,725.31	574.69
General expenses, miscellaneous	572,000		569,424.01	2,575.99
Buildings		48,000	47,803.11	196.89
Cables and land lines		27,000	26,991.09	8.91
Total, Weather Bureau		1,337,740	1,333,850.89	3,889.11
Grand total		5,894,540	5,820,204.00	74,336.00

[a] Of this amount $720,000 was paid directly to the experiment stations from the Treasury Department.

BUILDINGS RENTED IN THE DISTRICT OF COLUMBIA.

The following statement shows the buildings under rent in the District of Columbia on June 30, 1907:

Location of buildings.	For what purpose used.	Annual rental.
No. 1362 B street SW	Bureau of Animal Industry, laboratories and offices	$1,800
No. 1358 B street SW	Bureau of Animal Industry, offices	750
Munsey Building	do	6,520
No. 902 Pennsylvania avenue NW	do	240
No. 1228 C street SW	Bureau of Animal Industry, stable	144
Nos. 1304-1306 B street SW	Bureau of Plant Industry, offices	3,000
No. 1308 B street SW	do	360
No. 201 Thirteenth street SW	do	360
No. 224 Twelfth street SW	do	3,000
No. 203 Thirteenth street SW	do	420
No. 205 Thirteenth street SW	do	420
No. 207 Thirteenth street SW	do	420
No. 207½ Thirteenth street SW	do	420
No. 209 Thirteenth street SW	do	420
No. 237 Fourteenth street SW	do	120
No. 1310 B street SW	do	180
No. 1224 B street SW	do	450
No. 1226 B street SW	do	450
No. 1316 B street SW	do	1,500
No. 221 Linwood place SW	Bureau of Plant Industry (seed building)	3,000
Atlantic Building, 930 F street NW	Forest Service, offices	22,043
Ouray Building, Eighth and G streets NW.	do	1,428
No. 1520 Pennsylvania avenue SE	Forest Service, wood-testing laboratories	600
Rear of 913 E street NW	Forest Service, storage purposes	270
Rear of 922 and 924 F street NW	do	270
No. 928 Baptist alley NW	do	120
Nos. 202-204 Fourteenth street SW	Bureau of Chemistry, laboratories and offices	2,500
No. 206 Fourteenth street SW	Bureau of Chemistry, storage rooms	300
No. 207 Linwood place SW	Bureau of Chemistry, office and storage rooms	300
No. 300 Fourteenth street SW. (two apartments).	Bureau of Chemistry, offices	600
No. 300 Fourteenth street SW. (one apartment).	do	300
Nos. 208-210 Fourteenth street SW	Bureau of Soils, laboratories and offices	2,600
Nos. 212-214 Thirteenth street SW	do	1,320
No. 904 B street SW	Bureau of Entomology, offices	720
No. 215 Thirteenth street SW	Division of Publications, document rooms	5,000
No. 916 Pennsylvania avenue NW	Division of Publications, storage rooms	60
No. 237 Fourteenth street SW	Office of Public Roads, offices	1,880
Lot 27, square 231, SW	Office of Public Roads, stable	120
No. 1120 Virginia avenue SW	Office of Experiment Stations, offices	1,000
No. 611 Maryland avenue SW	Office of Chief Clerk, storage rooms	300
Total		65,705

ESTIMATES OF APPROPRIATIONS.

The estimates of appropriations for the year ending June 30, 1908, were prepared in this Division, based upon recommendations made by the chiefs of the several Bureaus and Divisions, and after receiving the approval of the Secretary were forwarded to the Treasury in accordance with statutory requirements.

APPROPRIATIONS AND ESTIMATES FOR 1908.

Estimates for 1908.

Salaries	$963,990.00
Salaries, Weather Bureau	196,990.00
Fuel, lights, and repairs, Weather Bureau	10,000.00
Contingent expenses, Weather Bureau	10,000.00
Salaries, station employees, Weather Bureau	551,550.00
General expenses, Weather Bureau	645,000.00
Cables and land lines, Weather Bureau	22,000.00
Buildings, Weather Bureau	53,000.00

General expenses, Bureau of Animal Industry	$942,200.00
Eradicating cattle ticks, Bureau of Animal Industry	82,500.00
General expenses, Bureau of Plant Industry	584,780.00
Cotton boll weevil investigations, Bureau of Plant Industry	105,000.00
Grain investigations	15,000.00
Purchase and distribution of valuable seeds	238,600.00
General expenses, Forest Service	770,060.00
Laboratory, Department of Agriculture	895,920.00
Soil investigations	200,000.00
Entomological investigations	113,810.00
Cotton boll weevil investigations, Bureau of Entomology	85,000.00
Preventing spread of moths, Bureau of Entomology	82,500.00
Biological investigations	55,920.00
Publications	40,000.00
Collecting agricultural statistics	127,900.00
Library	12,500.00
Contingent expenses, Department of Agriculture	47,000.00
Agricultural experiment stations	842,000.00
Nutrition investigations	25,000.00
Irrigation and drainage investigations	150,000.00
Public Road Inquiries	86,460.00
Total, Department of Agriculture	7,954,680.00

Appropriated for 1908.

Salaries, officers and clerks	$825,890.00	
Salaries, extra labor	7,600.00	
		$833,490.00
Contingent expenses		47,000.00
Library		12,500.00
Bureau of Animal Industry:		
General expenses	892,200.00	
Diseases of domestic animals, Minnesota	5,000.00	
Animal breeding and feeding	50,000.00	
		947,200.00
Meat inspection (permanent appropriation)		3,000,000.00
Eradicating cattle ticks:		
1908		125,000.00
1907 and 1908 (appropriated $25,000, balance July 1, 1907)		10,811.90
Bureau of Plant Industry:		
General expenses	$565,780.00	
Rent and repairs	19,000.00	
		584,780.00
Grain investigations		40,000.00
Purchase and distribution of valuable seeds	202,000.00	
Foreign seed and plant introduction	36,000.00	
		238,000.00
Cotton boll weevil investigations:		
1908		110,000.00
1907 and 1908 (appropriated $40,000, balance July 1, 1907)		35,632.42
Bureau of Chemistry: Laboratory		650,000.00
Bureau of Soils:		
Soils investigations	$166,000.00	
Rent of buildings	4,000.00	
		170,000.00
Bureau of Entomology:		
Entomological investigations	103,800.00	
White fly investigations	10,000.00	
		113,800.00
Cotton boll weevil investigations		40,000.00
Preventing spread of moths, 1907 and 1908 (appropriated $150,000, balance July 1, 1907)		141,407.27
Bureau of Biological Survey: Biological investigations		44,420.00
Division of Publications: Publications		35,000.00

Bureau of Statistics:		
Collecting agricultural statistics	$118,000.00	
Foreign markets investigations	4,900.00	
		$122,900.00
Office of Experiment Stations:		
Agricultural experiment stations ($827,000 [a])	30,000.00	
Farmers' institutes	5,000.00	
Station at Alaska	24,000.00	
Station at Hawaii	24,000.00	
Station at Porto Rico	24,000.00	
		107,000.00
Nutrition investigations		5,000.00
Irrigation investigations		150,000.00
Office of Public Roads:		
Public road inquiries	55,660.00	
Rent and repairs	2,000.00	
		57,660.00
Total for main Department, exclusive of Weather Bureau and Forest Service		7,621,601.59

WEATHER BUREAU.

Salaries	$196,990.00
Fuel, lights, and repairs	10,000.00
Contingent expenses	10,000.00
Salaries, station employees	551,550.00
General expenses	645,000.00
Total for Weather Bureau	1,413,540.00

FOREST SERVICE.

Salaries, officers and clerks		$143,200.00
General expenses	$1,716,800.00	
Rent	40,000.00	
		1,756,800.00
Administration, etc., of National Forests, 1908		375,000.00
Survey and report on Appalachian and White Mountain watersheds, 1907 and 1908 (appropriated $25,000, balance July 1, 1907)		24,142.86
Administration, etc., of National Forests, 1907 and 1908 (appropriated $125,000, balance July 1, 1907)		118,786.79
Total for Forest Service		2,417,929.65
Total of all regular appropriations for entire Department		11,453,071.24

SPECIAL APPROPRIATIONS.

Pomological investigations, fund from sale of fruits and vegetables, balance July 1, 1907		$1,779.40
Agricultural experiment stations, fund from sale of card indexes, balance July 1, 1907		65.15
Buildings, $250,000, $700,000, $300,000:		
Balance available on July 1, 1907	$245,340.07	
Sundry civil act March 4, 1907	250,000.00	
		495,340.07
Grand total of all appropriations available for the Department for the fiscal year 1908		11,950,255.86

[a] This includes $720,000 for State experiment stations paid through the Treasury Department. Congress has also appropriated $432,000 for State experiment stations under the Adams bill, to be paid through the Treasury Department. Total paid through the Treasury Department for State experiment stations, $1,152,000.

FISCAL AFFAIRS OF THE FOREST SERVICE.

For the purpose of having a record of all the fiscal affairs of the Department in one report, so that it may be of easy reference to the Secretary and others interested therein, the following statement, furnished by the fiscal agent of the Forest Service, is printed:

Statement of the fiscal transactions of the Forest Service.

Number of requisitions issued for purchase of supplies	2,944
Number of letters of authorization issued for travel	1,203
Number of accounts paid during the fiscal year 1907, including those paid from the cooperative fund	17,856
Total amount of accounts paid from the appropriations for 1907, including the cooperative fund	$1,602,577.59
Total amount of supplemental accounts paid from the appropriations for the fiscal year 1906; that is, July 1 to September 30, 1906 (1,925)	$122,186.58
Number of accounts paid, and the total amount thereof, for the fiscal year 1906, from October 1, 1906, to June 30, 1907, under waiver from the Treasury Department (342)	$25,126.45
Number of checks drawn during the year above named in payment of accounts for 1907, and supplemental accounts of 1906	19,819
Number of passenger transportation requests issued	6,944
Number of requisitions on the Quartermaster's Department for freight transportation	363
Amount of money received from sales of condemned property	$25.00
Number of accounts forwarded to the Treasury Department for direct settlement	569
Number of checks lost in transit through the mails, or by payee	26
Number of letters written and received in the ordinary transaction of business (about)	25,000
Amount of money received from timber sales, etc	$1,573,966.39
Amount of money for cooperative work	$14,824.43
Number of requisitions drawn on the Treasury for advances of money	66

LITTLEFIELD REPORT.

A classified statement of the expenditures of the Department for the fiscal year ended June 30, 1907, was prepared in accordance with law and submitted to the Committee on Expenditures. At the suggestion of the committee, of which Hon. C. E. Littlefield is chairman, the report was not printed this year, but was prepared by means of a duplicating process, resulting in a saving of several thousand dollars to the Government. A recapitulation of the expenditures of the Department will be found below, classified as required by the committee.

Recapitulation of the several appropriations for the entire Department of Agriculture as distributed among the following groups, and the total expenditures under each.

Statutory salaries	$1,043,256.77
Lump fund salaries in Washington	1,031,105.88
Lump fund salaries outside of Washington	4,146,466.09
Stationery	116,843.00
Miscellaneous supplies and services, equipment, books, machinery, etc	1,442,575.23
Furniture	69,743.88
Fuel	23,885.35
Freight	9,700.45
Express	11,916.70
Telegraph	197,117.36
Telephone	21,400.45
Rent	153,282.00

the several appropriations which were a
used, was.....
Amount available in fiscal year 1908 (balan
1907).....

Unexpended balance September 30
Repayments to credit of appropriations

Net unexpended balance on Septe
Outstanding liabilities (estimated).....

Balance to be turned back into Tr

CONDITION OF WO

The work of the Division is
been necessary to have several
office to assist the regular forc
for next year several additional
additional demands imposed o
in the appropriations and the
Congress.

Statement of appropriations, disbursements, and unexpended balances for the United States Department of Agriculture from the fiscal year 1839 to the fiscal year 1907, inclusive.

Purpose.	Date of appropriation act.	Reference to Statutes at Large.			Fiscal year.	Amount appropriated.	Amount disbursed.	Amount unexpended.
		Vol.	Page.	Sec.				
Collection of agricultural statistics, etc.	Mar. 3, 1839	5	354	9	1839	$1,000.00	$1,000.00	.....
	Aug. 26, 1842	5	533	26	1842	1,000.00	1,000.00	.....
	Mar. 3, 1843	5	642	1	1844	2,000.00	2,000.00	.....
	June 17, 1844	5	687	1	1845	2,000.00	2,000.00	.....
	Mar. 3, 1845	5	757	1	1846	3,000.00	3,000.00	.....
	Mar. 3, 1847	9	160	1	1847	3,000.00	3,000.00	.....
	Aug. 12, 1848	9	285	1	1848	3,500.00	3,500.00	.....
Chemical analyses of vegetable substances	.....do.....	9	285	1	1848	1,000.00	1,000.00	.....
Collection of agricultural statistics, etc.	Mar. 3, 1849	9	364	1	1849	3,500.00	3,500.00	.....
Chemical analyses of vegetable substances	.....do.....	9	364	1	1850	1,000.00	1,000.00	.....
Collection of agricultural statistics	Sept. 30, 1850	9	541	1	1850	4,500.00	4,500.00	.....
	Mar. 3, 1851	9	615	1	1851	5,500.00	5,500.00	.....
Collection of agricultural statistics and purchase of seeds	Aug. 31, 1852	10	95	1	1852	5,000.00	5,000.00	.....
	Mar. 3, 1853	10	208	1	1853	5,000.00	5,000.00	.....
Collection of agricultural statistics and purchase, etc., of seeds	May 31, 1854	10	292	1	1854	10,000.00	10,000.00	.....
	Aug. 4, 1854	10	567	1	1865	50,000.00	50,000.00	.....
	Mar. 3, 1855	10	664	1				
Collection of agricultural statistics, etc., and purchase, etc., of seeds	May 15, 1856	11	14	1	1856	30,000.00	30,000.00	.....
	Aug. 18, 1856	11	89	1	1857	75,000.00	75,000.00	.....
	Mar. 3, 1857	11	226	1	1858	60,000.00	60,000.00	.....
Information in relation to consumption of cotton	.....do.....	11	226	1	1858	3,500.00	3,157.25	$342.75
Collection of agricultural statistics, etc., and purchase, etc., of seeds	June 12, 1858	11	321	1	1859	60,000.00	60,000.00	.....
	Mar. 3, 1859	11	427	1	1860	40,000.00	40,000.00	.....
	June 25, 1860	12	108	1	1861	60,000.00	60,000.00	.....
	Mar. 2, 1861	12	217	1	1862	64,000.00	63,704.21	295.79
	Feb. 13, 1862	12	338	...				
Collection of agricultural statistics, etc., and purchase, etc., of seeds, including a deficiency appropriation of $20,000, made March 3, 1863	Mar. 1, 1862	12	350	1	1863	80,000.00	80,000.00	.....
Salaries	Feb. 25, 1863	12	691	1	1864	5,000.00	5,000.00	.....
Collection of agricultural statistics, etc., and purchase, etc., of seeds	.....do.....	12	691	1	1864	87,000.00	87,000.00	.....
Culture of cotton and tobacco	.....do.....	12	691	1	1864	3,000.00	3,000.00	.....
Investigations with flax and hemp	.....do.....	12	691	1	1864	20,000.00	9,500.00	10,500.00
Purchase of sorghum seed	Mar. 14, 1864	13	23	1	1864	2,000.00	2,000.00	.....
To rebuild shop in propagating garden	.....do.....	13	23	1	1864	800.00	800.00	.....
Postage	.....do.....	13	23	1	1864	1,320.00	1,320.00	.....
Furniture, carpets, fuel, etc	.....do.....	13	23	1	1864	650.00	650.00	.....
Salaries	June 25, 1864	13	155	1	1865	38,300.00	38,300.00	.....
	July 2, 1864	13	350	2				
Contingent expenses	June 25, 1864	13	155	1	1865	3,500.00	3,500.00	.....
Collecting agricultural statistics	.....do.....	13	155	1	1865	20,000.00	20,000.00	.....
Furniture, carpets, etc	.....do.....	13	155	1	1865	800.00	800.00	.....
Library and laboratory	.....do.....	13	155	1	1865	4,000.00	4,000.00	.....
Purchase and distribution of seeds	.....do.....	13	155	1	1865	61,000.00	61,000.00	.....
Experimental garden and grounds	.....do.....	13	155	1	1865	15,800.00	15,800.00	.....
To pay a debt incurred in preparing the Agricultural Report for 1861	July 2, 1864	13	350	2	1865	3,704.05	3,596.55	107.50
Rent, etc., of Commissioner's office	July 4, 1864	13	381	3	1865	3,500.00	3,500.00	.....
Salaries	Mar. 2, 1865	13	160	3	1866	46,726.59	46,726.59	.....
		13	455	1				
Contingent expenses	.....do.....	13	455	1	1866	7,500.00	7,500.00	.....
Collecting agricultural statistics	.....do.....	13	455	1	1866	20,000.00	20,000.00	.....
Purchase, etc., of seeds	.....do.....	13	160	3	1866	70,165.90	70,165.90	.....
		13	455	1				
Experimental garden and grounds, etc.	.....do.....	13	160	3	1866	23,395.33	23,395.33	.....
		13	455	1				
Salaries	July 23, 1866	14	201	1	1867	39,600.00	39,600.00	.....
Contingent expenses	.....do.....	14	201	1	1867	11,500.00	11,500.00	.....

Statement of appropriations, disbursements, and unexpended balances for the United States Department of Agriculture, etc.—Continued.

Purpose.	Date of appropriation act.	Reference to Statutes at Large. Vol.	Page.	Sec.	Fiscal year.	Amount appropriated.	Amount disbursed.	Amount unexpended.
Collecting agricultural statistics	July 23, 1866	14	201	1	1867	$10,000.00	$10,000.00	.....
Purchase of seeds	.....do.....	14	201	1	1867	115,200.00	115,200.00	.....
		14	202	1				
	Mar. 30, 1867	15	28	1				
Experimental garden and grounds, etc	July 23, 1866	14	202	1	1867	22,800.00	22,800.00	.....
Salaries	Mar. 2, 1867	14	451	1	1868	38,020.00	38,020.00	.....
Contingent expenses	.....do.....	14	451	1	1868	13,000.00	13,000.00	.....
Collecting agricultural statistics	.....do.....	14	451	1	1868	10,000.00	8,406.34	$1,593.66
Purchase, etc., of seeds	.....do.....	14	452	1	1868	85,200.00	85,200.00	.....
Museum	.....do.....	14	452	1	1868	10,000.00	10,000.00	.....
Experimental garden and grounds	.....do.....	14	452	1	1868	22,800.00	22,800.00	.....
To erect a building for the Department of Agriculture	.....do.....	14	464	1	1868	100,000.00	99,668.00	332.00
For certain goods and services furnished the Department	July 13, 1868	15	90	1	.....	37,604.70	37,604.70	.....
Salaries	July 20, 1868	15	105	1	1869	65,368.00	65,368.00	.....
Collecting argicultural statistics	.....do.....	15	106	1	1869	10,000.00	10,000.00	.....
Contingent expenses	.....do.....	15	196	1	1869	31,090.00	31,090.00	.....
Experimental garden and grounds	.....do.....	15	106	1	1869	23,500.00	23,500.00	.....
Purchase, etc., of seeds	.....do.....	15	106	1	1869	20,000.00	20,000.00	.....
Furniture, cases, and repairs	.....do.....	15	106	1	1869	22,635.00	22,635.00	.....
Salaries	Mar. 3, 1869	15	297	1	1870	69,240.00	67,720.00	1,520.00
		15	298	1				
Collecting agricultural statistics	.....do.....	15	298	1	1870	15,000.00	15,000.00	.....
Investigations of cattle disease	.....do.....	15	298	1	1870	15,000.00	12,695.60	2,304.40
Contingent expenses	.....do.....	15	298	1	1870	13,200.00	13,200.00	.....
Furniture, cases, and repairs	.....do.....	15	298	1	1870	2,500.00	2,500.00	.....
Experimental garden and grounds	.....do.....	15	298	1	1870	21,500.00	21,500.00	.....
Purchase, etc., of seeds	.....do.....	15	298	1	1870	20,000.00	18,981.33	1,018.67
Salaries	July 12, 1870	16	245	1	1871	71,980.00	71,811.64	168.36
	July 15, 1870	16	314	1				
Collecting agricultural statistics	July 12, 1870	16	245	1	1871	15,000.00	15,000.00	.....
Purchase, etc., of seeds	.....do.....	16	246	1	1871	30,000.00	28,865.17	1,134.83
Experimental garden and grounds	.....do.....	16	246	1	1871	53,200.00	53,200.00	.....
	July 15, 1870	16	302	1				
		16	303	1				
Contingent expenses	July 12, 1870	16	246	1	1871	8,100.00	8,100.00	.....
Furniture, cases, and repairs	.....do.....	16	246	1	1871	4,700.00	4,700.00	.....
Collecting and modeling specimens of fruit	.....do.....	16	246	1	1871	1,000.00	1,000.00	.....
Library	.....do.....	16	246	1	1871	1,000.00	1,000.00	.....
Herbarium	.....do.....	16	246	1	1871	1,000.00	1,000.00	.....
Laboratory	.....do.....	16	246	1	1871	1,700.00	1,700.00	.....
Folding room	.....do.....	16	246	1	1871	500.00	500.00	.....
Salaries	Mar. 3, 1871	16	489	1	1872	75,170.00	75,017.89	152.11
Collecting agricultural statistics	.....do.....	16	489	1	1872	15,000.00	14,059.36	940.64
Purchase and distribution of seeds, etc	.....do.....	16	489	1	1872	45,000.00	45,000.00	.....
Experimental garden and grounds	.....do.....	16	489	1	1872	36,800.00	36,800.00	.....
		16	509	1				
Contingent expenses	.....do.....	16	489	1	1872	12,900.00	12,900.00	.....
		16	490	1				
Furniture, cases, and repairs	.....do.....	16	490	1	1872	4,700.00	4,700.00	.....
Collecting and modeling specimens of fruit	.....do.....	16	490	1	1872	1,000.00	1,000.00	.....
Herbarium	.....do.....	16	490	1	1872	1,000.00	1,000.00	.....
Library	.....do.....	16	490	1	1872	2,050.00	2,050.00	.....
Laboratory	.....do.....	16	490	1	1872	3,450.00	3,450.00	.....
Salaries	May 8, 1872	17	77	1	1873	75,890.00	75,889.73	.27
Collecting agricultural statistics	.....do.....	17	77	1	1873	15,000.00	15,000.00	.....
Purchase and distribution of seeds	.....do.....	17	77	1	1873	55,000.00	55,000.00	.....

Statement of appropriations, disbursements, and unexpended balances for the United States Department of Agriculture, etc.—Continued.

Purpose.	Date of appropriation act.	Reference to Statutes at Large. Vol.	Page.	Sec.	Fiscal year.	Amount appropriated.	Amount disbursed.	Amount unexpended.
Experimental garden and grounds	May 8, 1872	17	77	1	1873	$31,000.00	$31,000.00	.....
	June 10, 1872	17	368	1				
Contingent expenses	May 8, 1872	17	77	1	1873	13,300.00	12,507.06	$792.94
		17	78	1				
Folding room	.....do.....	17	77	1	1873	300.00	300.00	.....
Furniture, cases, and repairs	.....do.....	17	78	1	1873	5,200.00	5,200.00	.....
Museum and herbarium	.....do.....	17	78	1	1873	5,000.00	4,674.43	325.57
	June 10, 1872	17	369	1				
Library	May 8, 1872	17	78	...	1873	1,750.00	1,750.00	.....
Salaries	Mar. 3, 1873	17	506	1	1874	78,190.00	76,924.00	1,266.00
Collecting agricultural statistics	.....do.....	17	506	1	1874	15,000.00	11,553.20	3,446.80
Purchase and distribution of seeds, etc	.....do.....	17	506	1	1874	65,000.00	64,904.89	95.11
		17	507	1				
		17	540	1				
Experimental garden and grounds	.....do.....	17	507	1	1874	26,200.00	25,731.74	468.26
		17	529	1				
Museum and herbarium	.....do.....	17	507	1	1874	2,000.00	1,942.02	57.98
Contingent expenses	.....do.....	17	507	1	1874	13,600.00	12,699.34	900.66
Furniture, cases, and repairs	.....do.....	17	507	1	1874	4,200.00	3,302.40	897.60
Library	.....do.....	17	507	1	1874	1,500.00	1,259.10	240.90
Postage	.....do.....	17	542	4	1874	52,000.00	35,449.09	16,550.91
Salaries	June 20, 1874	18	107	1	1875	77,180.00	77,127.60	52.40
Collecting agricultural statistics	.....do.....	18	107	1	1875	15,000.00	12,147.56	2,852.44
Purchase and distribution of seeds, etc	.....do.....	18	107	1	1875	95,000.00	94,719.83	280.17
	Jan. 25, 1875	18	303	3				
Furniture, cases, and repairs	June 20, 1874	18	107	1	1875	4,200.00	4,135.36	64.64
Experimental garden and grounds	.....do.....	18	107	1	1875	24,100.00	24,094.06	5.94
	June 23, 1874	18	227	1				
Contingent expenses	June 20, 1874	18	107	1	1875	12,600.00	10,972.61	1,627.39
Museum and herbarium	.....do.....	18	107	1	1875	4,500.00	3,300.00	1,020.00
	June 23, 1874	18	227	1				
Laboratory	.....do.....	18	227	1	1875	1,300.00	1,300.00	.....
Library	.....do.....	18	227	1	1875	1,500.00	1,087.90	412.10
Postage	June 20, 1874	18	107	1	1875	52,000.00	42,633.00	9,367.00
To publish Commissioner's report for the years 1872 and 1873	June 23, 1874	18	227	1	1875	50,000.00	49,561.91	438.09
Salaries	Mar. 3, 1875	18	368	1	1876	77,180.00	77,115.71	64.29
Collecting agricultural statistics	.....do.....	18	368	1	1876	15,000.00	14,500.00	500.00
Purchase and distribution of seeds	.....do.....	18	368	1	1876	65,000.00	65,000.00	.....
Experimental garden and grounds	.....do.....	18	368	1	1876	19,990.00	19,956.11	33.89
		18	394	1				
Museum and herbarium	.....do.....	18	368	1	1876	2,000.00	1,993.55	6.45
Furniture, cases, and repairs	.....do.....	18	368	1	1876	3,300.00	3,124.23	175.77
Library	.....do.....	18	368	1	1876	1,250.00	1,046.84	203.16
Laboratory	.....do.....	18	368	1	1876	1,300.00	1,300.00	.....
Contingent expenses	.....do.....	18	368	1	1876	12,100.00	11,378.91	721.09
Postage	.....do.....	18	368	1	1876	52,000.00	3,428.29	48,571.71
Salaries	July 21, 1876	19	95	1	1877	67,836.96	67,806.19	30.77
	Aug. 15, 1876	19	167	1				
Experimental garden and grounds	July 31, 1876	19	115	1	1877	11,550.00	11,550.00	.....
	Aug. 15, 1876	19	167	1				
Collecting agricultural statistics	.....do.....	19	167	1	1877	10,000.00	10,000.00	.....
Purchase and distribution of seeds, etc	.....do.....	19	167	1	1877	85,000.00	80,000.00	5,000.00
	Mar. 3, 1877	19	319	1				
Museum and herbarium	Aug. 15, 1876	19	167	1	1877	2,000.00	2,000.00	.....
Furniture, cases, and repairs	.....do.....	19	167	1	1877	2,000.00	2,000.00	.....
Library	.....do.....	19	167	1	1877	1,000.00	800.00	200.00
Laboratory	.....do.....	19	167	1	1877	1,300.00	1,300.00	.....
Contingent expenses	.....do.....	19	167	1	1877	10,000.00	8,800.00	1,200.00
Postage	.....do.....	19	167	1	1877	4,000.00	3,950.00	50.00
Salaries	Mar. 3, 1877	19	317	1	1878	65,640.00	65,640.00	.....
Collecting agricultural statistics	.....do.....	19	317	1	1878	15,000.00	15,000.00	.....
Purchase and distribution of seeds, etc	.....do.....	19	317	1	1878	75,000.00	74,579.33	420.67
Experimental garden and grounds	.....do.....	19	317	1	1878	10,500.00	10,500.00	.....
		19	360	1				

Statement of appropriations, disbursements, and unexpended balances for the United States Department of Agriculture, etc.—Continued.

Purpose.	Date of appropriation act.	Reference to Statutes at Large.			Fiscal year.	Amount appropriated.	Amount disbursed.	Amount unexpended.
		Vol.	Page.	Sec.				
Museum	Mar. 3, 1877	19	317	1	1878	$1,500.00	$1,500.00	.....
Furniture, cases, and repairs	do	19	317	1	1878	4,500.00	4,500.00	.....
Library	do	19	317	1	1878	1,000.00	1,000.00	.....
Laboratory	do	19	317	1	1878	1,000.00	1,000.00	.....
Contingent expenses	do	19	317	1	1878	8,000.00	8,000.00	.....
Postage	do	19	317	1	1878	4,000.00	3,415.61	$584.39
Report on forestry	do	19	360	1	1878	2,500.00	2,500.00	.....
International Industrial Exposition at Paris	Dec. 15, 1877	20	246	4	1878	10,000.00	10,000.00	.....
Salaries	June 19, 1878	20	203	1	1879	66,900.00	66,900.00	.....
Collecting agricultural statistics	do	20	203	1	1879	10,000.00	10,000.00	.....
Purchase and distribution of seeds, etc	do	20	203	1	1879	75,000.00	75,000.00	.....
Experimental garden and grounds	do	20 20	203 240	1 1	1879	13,500.00	13,500.00	.....
Museum	do	20	203	1	1879	1,000.00	1,000.00	.....
Furniture, cases, and repairs	do	20	204	1	1879	4,000.00	4,000.00	.....
Library	do	20	204	1	1879	1,000.00	1,000.00	.....
Laboratory	do	20	204	1	1879	1,500.00	1,500.00	.....
Contingent expenses	do	20	204	1	1879	8,000.00	8,000.00	.....
Postage	do	20	204	1	1879	4,000.00	3,960.00	40.00
Investigating the history and habits of insects	do	20	204	1	1879	10,000.00	10,000.00	.....
Investigating diseases of domestic animals	do	20	240	1	1879	10,000.00	10,000.00	.....
To erect a stable	Mar. 3, 1879	20	392	1	1879	1,500.00	1,500.00	.....
Salaries	June 21, 1879	21	23	1	1880	66,900.00	66,900.00	.....
Collecting agricultural statistics	do	21	23	1	1880	10,000.00	9,982.88	17.12
Purchase and distribution of seeds, etc	do	21	23	1	1880	75,000.00	75,000.00	.....
Experimental garden and grounds	do	21	23	1	1880	13,100.00	13,100.00	.....
Museum	do	21	23	1	1880	1,000.00	1,000.00	.....
Furniture, cases, and repairs	do	21	23	1	1880	4,000.00	4,000.00	.....
Library	do	21	23	1	1880	1,000.00	1,000.00	.....
Laboratory	do	21	23	1	1880	1,500.00	1,500.00	.....
Contingent expenses	do	21	23	1	1880	8,000.00	8,000.00	.....
Postage	do	21	23	1	1880	4,000.00	4,000.00	.....
Investigating the history and habits of insects	do	21	29	1	1880	5,000.00	5,000.00	.....
Investigating diseases of domestic animals	do	21	30	1	1880	10,000.00	8,878.84	1,121.16
Salaries	June 16, 1880	21	292	1	1881	69,200.00	69,185.22	14.78
Purchase and distribution of seeds, etc	do May 3, 1881	21 21	294 453	1 1	1881	102,160.31	102,157.48	2.83
Collecting agricultural statistics	June 16, 1880	21	293	1	1881	10,000.00	9,985.60	14.40
Experimental garden and grounds	do	21	294	1	1881	12,600.00	12,600.00	.....
Museum	do	21	294	1	1881	1,000.00	1,000.00	.....
Furniture, cases, and repairs	do	21	294	1	1881	5,000.00	5,000.00	.....
Library	do	21	294	1	1881	1,000.00	1,000.00	.....
Laboratory	do	21	295	1	1881	4,000.00	4,000.00	.....
Contingent expenses	do	21	295	1	1881	10,000.00	9,769.17	230.83
Postage	do	21	295	1	1881	4,000.00	3,838.00	162.00
Report on forestry	do	21	296	1	1881	5,000.00	3,762.51	1,237.49
Investigating the history and habits of insects	do	21	294	1	1881	5,000.00	4,997.31	2.69
Investigating the diseases of domestic animals	do	21	295	1	1881	10,000.00	10,000.00	.....
Examination of fibers	do	21	295	1	1881	4,000.00	4,000.00	.....
Experiments in the manufacture of sugar	do	21	295	1	1881	7,500.00	7,500.00	.....
Collecting data touching arid regions of the United States	do	21	295	1	1881	5,000.00	460.00	4,540.00
Reclamation of arid lands	do	21	295	1	1881	20,000.00	18,353.55	(a)
Salaries	Mar. 3, 1881	21	381	1	1882	79,500.00	79,491.81	8.19
Collecting agricultural statistics	do	21	382	1	1882	10,000.00	10,000.00	.....
Laboratory	do	21	382	1	1882	6,000.00	5,811.85	188.15

a Unexpended balance of $1,646.45 carried to fiscal year 1882.

Statement of appropriations, disbursements, and unexpended balances for the United States Department of Agriculture, etc.—Continued.

Purpose.	Date of appropriation act.	Reference to Statutes at Large.			Fiscal year.	Amount appropriated.	Amount disbursed.	Amount unexpended.
		Vol.	Page.	Sec.				
Purchase and distribution of seeds, etc.	Mar. 3, 1881 Apr. 16, 1882	21 22	382 44	1 1	1882	$100,000.00	$99,991.53	$8.47
Experiments in the culture, etc., of tea	Mar. 3, 1881	21	383	1	1882	10,000.00	8,750.87	1,249.13
Experimental garden and grounds	.....do.....	21 21	383 385	1 1	1882	15,000.00	14,968.25	31.75
Museum	.....do.....	21	383	1	1882	1,000.00	1,000.00	.....
Furniture, cases, and repairs	.....do.....	21	383	1	1882	4,000.00	4,000.00	.....
Library	.....do.....	21	383	1	1882	1,000.00	973.85	26.15
Investigating the history and habits of insects	.....do.....	21	383	1	1882	20,000.00	19,998.94	1.06
Examination of fibers	.....do.....	21	384	1	1882	5,000.00	5,000.00	.....
Investigating the diseases of domestic animals	.....do.....	21	384	1	1882	25,000.00	22,443.89	2,556.11
Collecting data touching the arid regions of the United States	.....do.....	21	384	1	1882	5,000.00	4,216.55	783.45
Reclamation of arid lands, including an unexpended balance of $1,646.45 from fiscal year 1881	.....do.....	21	384	1	1882	11,646.45	11,561.19	(a)
Report on forestry	.....do.....	21	384	1	1882	5,000.00	4,941.00	59.00
Postage	.....do.....	21	384	1	1882	4,000.00	4,000.00	.....
Contingent expenses	.....do.....	21	384	1	1882	10,000.00	10,000.00	.....
Building for display of agricultural implements	.....do.....	21	385	1	1882	10,000.00	10,000.00	.....
Experiments in the manufacture of sugar (including $864.60 from sale of molasses, etc.)	.....do.....	21	384	1	1882	35,864.60	32,333.75	(b)
Transportation of specimens from Atlanta	Feb. 13, 1882	22	3	1	1882	5,000.00	4,998.91	1.09
Salaries	May, 19, 1882	22	89	1	1883	102,580.00	102,575.49	4.51
Collecting agricultural statistics	.....do.....	22	90	1	1883	80,000.00	78,170.80	1,829.20
Laboratory	.....do.....	22	90	1	1883	6,000.00	6,000.00	.....
Purchase and distribution of seeds, etc.	.....do.....	22	90	1	1883	80,000.00	80,000.00	.....
Experiments in the culture, etc., of tea	.....do.....	22	91	1	1883	5,000.00	3,905.66	1,094.34
Experimental garden and grounds	.....do.....	22 22	91 92	1 1	1883	15,500.00	15,471.82	28.18
Museum	.....do.....	22	91	1	1883	1,000.00	1,000.00	.....
Furniture, cases, and repairs	.....do.....	22	91	1	1883	6,700.00	6,700.00	.....
Library	.....do.....	22	91	1	1883	1,500.00	1,485.32	14.68
Investigating the history and habits of insects	.....do.....	22	91	1	1883	20,000.00	19,997.75	2.25
Examination of fibers	.....do.....	22	91	1	1883	10,000.00	7,961.94	2,038.06
Investigating the diseases of domestic animals	.....do.....	22	92	1	1883	25,000.00	21,584.28	3,415.72
Reclamation of arid lands, including an unexpended balance of $85.26 from fiscal year 1882	.....do.....	22	92	1	1883	20,085.26	12,429.13	(c)
Report on forestry	.....do.....	22	92	1	1883	10,000.00	8,731.99	1,268.01
Postage	.....do.....	22	92	1	1883	4,000.00	3,977.49	22.51
Contingent expenses	.....do.....	22	92	1	1883	15,000.00	14,920.74	79.26
Experiments in the manufacture of sugar, including an unexpended balance of $3,530.85 from fiscal year 1882	.....do.....	22	92	1	1883	28,530.85	28,529.31	1.54
Erection of building for seed division	Aug. 7, 1882	22	306	1	1883	25,000.00	25,000.00	.....
Report on the Angora goat	.....do.....	22	337	1	1883	500.00	500.00	.....
Salaries	Jan. 20, 1883	22	408	1	1884	127,640.00	127,639.87	.13
Collecting agricultural statistics	.....do.....	22	410	1	1884	80,000.00	79,770.86	229.14
Laboratory, and for experiments in the manufacture of sugar, including $842.18 from the sale of sirup, etc.	.....do.....	22	410	1	1884	16,842.18	16,829.26	12.92

a Unexpended balance of $85.26 carried to fiscal year 1883.
b Unexpended balance of $3,530.85 carried to fiscal year 1883.
c Unexpended balance of $7,656.13 carried to fiscal year 1884.

Statement of appropriations, disbursements, and unexpended balances for the United States Department of Agriculture, etc.—Continued.

Purpose.	Date of appropriation act.	Reference to Statutes at Large. Vol.	Page.	Sec.	Fiscal year.	Amount appropriated.	Amount disbursed.	Amount unexpended.
Purchase and distribution of seeds, etc	Jan. 20, 1883	22	410	1	1884	$75,000.00	$74,986.48	$13.52
Experimental gardens and grounds	do	22 22	409 411	1 1	1884	15,500.00	15,448.87	51.13
Museum	do	22	409	1	1884	1,000.00	993.51	6.49
Furniture, cases, and repairs	do	22	410	1	1884	6,000.00	5,998.82	1.18
Library	do	22	411	1	1884	1,500.00	1,439.86	60.14
Investigating the history and habits of insects	do Aug. 4, 1886	22 24	409 273	1 1	1884	20,002.82	20,002.82	.....
Reclamation of arid lands, including an unexpended balance of $7,656.13 from fiscal year 1883	Jan. 20, 1883	22	411	1	1884	17,656.13	16,164.68	1,491.45
Investigating the diseases of domestic animals	do	22	411	1	1884	25,000.00	24,011.85	988.15
Report on forestry	do	22	411	1	1884	10,000.00	9,998.30	1.70
Postage	do	22	411	1	1884	4,000.00	3,841.48	158.52
Contingent expenses	do	22	411	1	1884	14,000.00	13,991.43	8.57
Building of greenhouse	do	22	631	1	1884	2,500.00	2,500.00	.....
Salaries	June 5, 1884	23	36	1	1885	137,590.00	137,557.80	32.20
Collecting agricultural statistics	do	23	38	1	1885	100,000.00	99,986.59	13.41
Bureau of Animal Industry	May 29, 1884	23	31	1	1885	150,000.00	56,807.73	(a)
Purchase and distribution of seeds, etc	June 5, 1884	23	38	1	1885	100,000.00	99,983.82	16.18
Laboratory, and for experiments in the manufacture of sugar	do	23	38	1	1885	50,000.00	49,996.70	3.30
Investigating the history and habits of insects	do	23	37	1	1885	20,000.00	19,986.83	13.17
Silk culture	do	23	39	1	1885	15,000.00	14,916.23	83.77
Contingent expenses	do	23	39	1	1885	15,000.00	14,862.20	137.80
Report on forestry	do	23	39	1	1885	10,000.00	9,987.36	12.64
Experimental garden and grounds	do Oct. 19, 1888	23 25	37 581	1 1	1885	17,840.25	17,513.67	326.58
Furniture, cases, and repairs	June 5, 1884	23	38	1	1885	6,000.00	5,947.27	52.73
Postage	do	23	39	1	1885	4,000.00	3,956.98	43.02
Experiments in the culture, etc., of tea	do	23	39	1	1885	3,000.00	2,998.90	1.10
Library	do	23	39	1	1885	1,500.00	1,403.63	96.37
Museum	do	23	37	1	1885	1,000.00	1,000.00	.....
Quarantine stations	June 7, 1884	23	207	1	1885	25,000.00	22,029.18	(b)
Salaries	Mar. 3, 1885	23	353	1	1886	137,590.00	137,337.42	252.58
Collecting agricultural statistics	do	23	355	1	1886	75,000.00	68,723.06	6,276.94
Bureau of Animal Industry, including an unexpended balance of $93,192.27 from fiscal year 1885	do	23	355	1	1886	193,192.27	58,261.05	134,931.22
Quarantine stations, including an unexpended balance of $2,970.82 for fiscal year 1885	do	23	356	1	1886	32,970.82	18,958.57	14,012.25
Purchase and distribution of seeds, etc	do	23	354	1	1886	100,000.00	99,980.24	19.76
Laboratory, and for experiments in the manufacture of sugar	do	23	354	1	1886	40,000.00	39,942.11	57.89
Investigating the history and habits of insects	do	23	354	1	1886	25,000.00	24,976.46	23.54
Silk culture	do Oct. 19, 1888	23 25	356 581	1 1	1886	15,012.00	15,008.50	3.50
Contingent expenses	Mar. 3, 1885	23	356	1	1886	15,000.00	14,937.62	62.38
Report on forestry	do	23	356	1	1886	10,000.00	9,836.83	163.17
Experimental garden and grounds	do Aug. 4, 1886 Oct. 19, 1888	23 24 25	254 273 581	1 1 1	1886	17,208.13	17,024.88	183.25
Furniture, cases, and repairs	Mar. 3, 1885	23	354	1	1886	7,500.00	7,423.59	76.41
Postage	do	23	356	1	1886	4,000.00	2,556.20	1,443.80
Experiments in the culture, etc., of tea	do	23	356	1	1886	3,000.00	1,813.67	1,186.33
Library	do	23	355	1	1886	1,500.00	1,417.03	82.97
Museum	do	23	354	1	1886	1,000.00	998.88	1.12
Salaries	June 30, 1886	24	100	1	1887	142,890.00	141,420.68	1,469.32

a Unexpended balance of $93,192.27 carried to fiscal year 1886.
b Unexpended balance of $2,970.82 carried to fiscal year 1886.

***Statement of appropriations, disbursements, and unexpended balances for the United States Department of Agriculture, etc.*—Continued.**

Purpose.	Date of appropriation act.	Reference to Statutes at Large. Vol.	Page.	Sec.	Fiscal year.	Amount appropriated.	Amount disbursed.	Amount unexpended.
Collecting agricultural statistics	June 30, 1886	24	103	1	1887	$65,000.00	$64,955.14	$44.86
Bureau of Animal Industry	do	24	103	1	1887	100,000.00	99,985.56	14.44
Quarantine stations	do	24	103	1	1887	30,000.00	10,639.44	19,360.56
Purchase and distribution of seeds, etc	do	24	102	1	1887	100,000.00	99,998.37	1.63
Laboratory	do	24	101	1	1887	6,000.00	4,570.86	1,429.14
Experiments in the manufacture of sugar, including $1,891 from sales	do	24	101	1	1887	95,891.00	95,853.14	37.86
Investigating the history and habits of insects	do Oct. 19, 1888	24 25	101 582	1 1	1887	15,096.25	15,088.05	8.20
Silk culture, including $864.81 from sale of raw silk	June 30, 1886 Oct. 19, 1888	24 25	101 581	1 1	1887	15,939.56	15,939.56	.....
Contingent expenses	June 30, 1886	24	104	1	1887	15,000.00	14,936.83	63.17
Report on forestry	do	24	103	1	1887	8,000.00	7,953.50	46.50
Experimental garden and grounds	do	24	102	1	1887	23,200.00	22,202.15	997.85
Furniture, cases, and repairs	do	24	103	1	1887	8,125.00	8,092.11	32.89
Postage	do	24	104	1	1887	4,000.00	3,500.00	500.00
Experiments in the culture, etc., of tea	do	24	104	1	1887	2,000.00	1,753.78	246.22
Pomological information	do	24	100	1	1887	3,000.00	2,993.20	6.80
Library	do	24	103	1	1887	1,500.00	1,428.65	71.35
Botanical investigations	do	24	100	1	1887	5,000.00	4,988.12	11.88
Museum	do	24	102	1	1887	1,000.00	998.88	1.12
Ornithology and mammalogy	do	24	101	1	1887	10,000.00	9,999.98	.02
Reclamation of arid lands	do	24	103	1	1887	5,000.00	.....	5,000.00
Adulteration of food	do	24	100	1	1887	1,000.00	989.14	10.86
Salaries	Mar. 3, 1887	24	495	1	1888	161,490.00	158,220.87	3,269.13
Collecting agricultural statistics	do	24	498	1	1888	65,000.00	64,965.33	34.67
Bureau of Animal Industry, including $100,000 immediately available	do	24	499	1	1888	500,000.00	499,975.32	24.68
Quarantine stations	do	24	499	1	1888	20,000.00	9,538.75	10,461.25
Purchase and distribution of seeds, etc	do	24	498	1	1888	103,000.00	102,587.55	412.45
Laboratory	do	24	497	1	1888	6,000.00	5,969.89	30.11
Experiments in the manufacture of sugar	do	24	497	1	1888	50,000.00	49,997.43	2.57
Experiments in the manufacture of sugar (deficiency)	Oct. 19, 1888	25	582	1	1887 1888	8,000.00	7,927.50	72.50
Investigating the history and habits of insects	Mar. 3, 1887	24	497	1	1888	20,000.00	20,000.00	.....
Silk culture, including $1,989.06 from sale of raw silk	do	24	497	1	1888	16,989.06	16,989.02	.04
Contingent expenses	do	24	499	1	1888	15,000.00	14,825.57	174.43
Report on forestry	do	24	499	1	1888	8,000.00	7,996.10	3.90
Experimental garden and grounds	do	24	497	1	1888	24,800.00	24,706.86	93.14
Furniture, cases, and repairs	do	24	498	1	1888	7,000.00	6,982.88	17.12
Postage	do	24	499	1	1888	4,000.00	3,000.00	1,000.00
Pomological information	do	24	497	1	1888	3,000.00	2,971.69	28.31
Library	do	24	499	1	1888	2,000.00	1,983.78	16.22
Botanical investigations	do	24	496	1	1888	7,000.00	6,997.28	2.72
Museum	do	24	497	1	1888	1,000.00	947.41	52.59
Ornithology and mammalogy	do	24	497	1	1888	3,940.00	3,869.23	70.77
Adulteration of food	do	24	497	1	1888	1,000.00	830.16	169.84
Salaries	July 18, 1888 Mar. 2, 1889	25 25	328 923	1 1	1889	171,890.32	169,152.51	2,737.81
Collecting agricultural statistics	July 18, 1888	25	332	1	1889	70,000.00	69,162.45	837.55
Botanical investigations	do	25	330	1	1889	35,000.00	22,076.75	(a)
Investigating the history and habits of insects	do Sept. 30, 1890	25 26	331 525	1 1	1889	20,131.64	20,131.64	.....
Ornithology and mammalogy	July 18, 1888 Mar. 2, 1889 Sept. 30, 1890 Mar. 3, 1891	25 25 26 26	332 838 525 880	1 1 1 1	1889	5,025.90	5,022.06	3.84
Pomological information	July 18, 1888	25 26	330 526	1 1	1889	4,024.48	4,020.32	4.16
Microscopical investigations	do	25	330	1	1889	1,000.00	999.87	.13
Laboratory	do Mar. 2, 1889	25 25	330 837	1 1	1889	11,000.00	9,994.25	1,005.75

[a] Unexpended balance of $12,923.25 carried to fiscal year 1890.

Statement of appropriations, disbursements, and unexpended balances for the United States Department of Agriculture, etc.—Continued.

Purpose.	Date of appropriation act.	Reference to Statutes at Large. Vol.	Page.	Sec.	Fiscal year.	Amount appropriated.	Amount disbursed.	Amount unexpended.
Forestry investigations	July 18, 1888	25	333	1	1889	$8,000.00	$7,999.03	$0.97
Purchase and distribution of seeds	....do	25	332	1	1889	104,200.00	104,168.73	31.27
Experimental gardens and grounds	....do	25	332	1	1889	26,640.00	26,639.83	.17
Museum	....do	25	332	1	1889	1,000.00	891.25	108.75
Furniture, cases, and repairs	....do	25	333	1	1889	7,350.00	7,236.74	113.26
Library	....do	25	333	1	1889	2,000.00	1,956.34	43.66
Postage	....do	25	333	1	1889	4,000.00	4,000.00	.....
Contingent expenses	....do Mar. 3, 1891	25 26	333 881	1 1	1889	15,010.00	15,009.22	.78
Office of Experiment Stations	July 18, 1888	25	334	1	1889	10,000.00	9,033.77	966.23
Experiments in the manufacture of sugar	....do	25	333	1	1889	100,000.00	41,635.24	(a)
Quarantine stations	....do	25	333	1	1889	15,000.00	11,628.39	3,371.61
Bureau of Animal Industry	....do	25	333	1	1889	500,000.00	479,623.57	20,376.43
Silk culture, including $708.26 from sale of raw silk	....do	25	331	1	1889	23,208.26	23,208.26	.....
Salaries	Mar. 2, 1889	25	835	1	1890	178,580.00	175,547.04	3,032.96
Collecting agricultural statistics	....do	25	839	1	1890	75,000.00	74,327.51	672.49
Botanical investigations, including an unexpended balance of $12,923.25 from fiscal year 1889	....do July 28, 1892	25 27	836 296	1 1	1890	48,009.25	47,990.38	18.87
Investigating the history and habits of insects	Mar. 2, 1889	25	837	1	1890	20,000.00	19,892.72	107.28
Ornithology and mammalogy	....do July 14, 1890	25 26	838 285	1 1	1890	7,000.00	6,994.16	5.84
Pomological information	Mar. 2, 1889 Mar. 3, 1891	25 26	837 881	1 1	1890	4,304.79	4,304.79	.....
Microscopical investigations	Mar. 2, 1889 July 28, 1892	25 27	837 296	1 1	1890	1,062.50	1,062.50	.....
Laboratory	Mar. 2, 1889	25	837	1	1890	6,000.00	5,461.99	538.01
Forestry investigations	....do	25	840	1	1890	8,000.00	7,999.96	.04
Purchase and distribution of seeds	....do	25	839	1	1890	104,200.00	104,174.55	25.45
Experimental garden and grounds	....do	25	838	1	1890	26,640.00	26,478.45	161.55
Museum	....do	25	838	1	1890	1,000.00	998.39	1.61
Furniture, cases, and repairs	....do Apr. 4, 1890	25 26	839 42	1 1	1890	9,350.00	9,261.93	88.07
Library	Mar. 2, 1889	25	839	1	1890	2,000.00	1,738.28	261.72
Postage	....do	25	840	1	1890	4,000.00	4,000.00	.....
Contingent expenses	....do Apr. 4, 1890	25 26	840 42	1 1	1890	20,000.00	19,965.32	34.68
Office of Experiment Stations	Mar. 2, 1889	25	840	1	1890	15,000.00	14,991.69	8.31
Experiments in the manufacture of sugar, including an unexpended balance of $58,364.76 from fiscal year 1889	....do	25	840	1	1890	83,364.76	83,064.14	300.62
Quarantine stations	....do	25	840	1	1890	15,000.00	11,266.24	3,733.76
Bureau of Animal Industry	....do	25	839	1	1890	500,000.00	311,025.31	(b)
Silk culture, including $1,627.81 from sale of raw silk	....do	25	837	1	1890	21,627.81	21,626.10	1.71
Artesian wells	Apr. 4, 1890	26	42	1	1890	20,000.00	19,652.17	347.83
Salaries	July 14, 1890	26	282	1	1891	248,902.85	239,923.29	8,979.56
Collecting agricultural statistics	....do	26	284	1	1891	100,000.00	85,126.44	14,873.56
Botanical investigations	....do	26	284	1	1891	40,000.00	36,428.36	3,571.64
Investigating the history and habits of insects	....do July 28, 1892	26 27	285 296	1 1	1891	27,501.77	27,481.00	20.77
Ornithology and mammalogy	July 14, 1890 July 28, 1892	26 27	285 296	1 1	1891	14,004.90	13,003.67	1,001.23
Pomological information	July 14, 1890	26	285	1	1891	5,000.00	4,983.88	16.12
Microscopical investigations	....do	26	285	1	1891	5,000.00	3,281.90	1,718.10
Vegetable pathology	....do	26	285	1	1891	15,000.00	14,995.75	4.25
Laboratory	....do	26	286	1	1891	20,200.00	19,985.27	214.73
Forestry investigations	....do	26	286	1	1891	10,000.00	9,785.99	214.01
Illustrations and engravings	....do	26	286	1	1891	2,000.00	1,999.58	.42
Purchase and distribution of seeds	....do	26	286	1	1891	105,400.00	105,090.94	309.06

[a] Unexpended balance of $58,364.76 carried to fiscal year 1890.
[b] Unexpended balance of $188,974.69 carried to fiscal year 1891.

Statement of appropriations, disbursements, and unexpended balances for the United States Department of Agriculture, etc.—Continued.

Purpose.	Date of appropriation act.	Reference to Statutes at Large. Vol.	Page.	Sec.	Fiscal year.	Amount appropriated.	Amount disbursed.	Amount unexpended.
Document and folding room	July 14, 1890	26	287	1	1891	$2,000.00	$1,995.53	$4.47
Experimental garden and grounds	do	26	287	1	1891	28,500.00	28,396.41	103.59
Museum	do	26	287	1	1891	4,000.00	3,832.28	167.72
Furniture, cases, and repairs	do	26	287	1	1891	12,000.00	11,991.01	8.99
	Mar. 3, 1891	26	1049	1				
Library	July 14, 1890	26	287	1	1891	3,000.00	2,997.20	2.80
Postage	do	26	287	1	1891	5,000.00	4,833.00	167.00
Contingent expenses	do	26	287	1	1891	20,000.00	18,097.13	1,902.87
Office of Experiment Stations	do	26	288	1	1891	15,000.00	14,984.48	15.52
Experiments in the manufacture of sugar	do	26	288	1	1891	75,000.00	74,901.18	98.82
	Mar. 3, 1891	26	1050	1				
Irrigation investigations	Sept. 30, 1890	26	525	1	1891	40,000.00	39,926.67	73.33
Quarantine stations	July 14, 1890	26	288	1	1891	15,000.00	13,586.72	1,413.28
Bureau of Animal Industry, including an unexpended balance of $188,974.69 from fiscal year 1890	do	26	287	1	1891	538,974.69	469,113.35	69,861.34
Silk culture, including $565 from sale of raw silk	do	26	285	1	1891	20,565.00	19,536.33	1,028.67
Salaries	Mar. 3, 1891	26	1045	1	1892	256,800.00	252,766.17	4,033.83
Collecting agricultural statistics	do	26	1046	1	1892	102,500.00	88,869.51	13,630.49
Botanical investigations	do	26	1046	1	1892	40,246.40	40,246.40	.....
	Aug. 23, 1894	28	440	1				
Investigating the history and habits of insects	Mar. 3, 1891	26	1047	1	1892	27,800.00	27,780.03	19.97
Ornithology and mammalogy	do	26	1047	1	1892	15,000.00	14,688.00	312.00
Pomological information	do	26	1047	1	1892	5,000.00	4,985.27	14.73
Microscopical investigations	do	26	1047	1	1892	2,000.00	1,251.46	748.54
Vegetable pathology	do	26	1047	1	1892	15,076.47	15,076.47	.....
	Aug. 23, 1894	28	440	1				
Laboratory	Mar. 3, 1891	26	1047	1	1892	19,400.00	19,272.59	127.41
Fiber investigations	do	26	1048	1	1892	10,000.00	8,017.44	1,982.56
Forestry investigations	do	26	1048	1	1892	15,056.85	15,056.85	.....
	Mar. 3, 1893	27	660	1				
Illustrations and engravings	Mar. 3, 1891	26	1048	1	1892	2,000.00	1,999.85	.15
Purchase and distribution of seeds	do	26	1048	1	1892	105,400.00	104,920.35	479.65
Document and folding room	do	26	1049	1	1892	2,000.00	1,996.82	3.18
Experimental garden and grounds	do	26	1049	1	1892	28,622.53	28,536.67	85.86
	Mar. 3, 1893	27	660	1				
Museum	Mar. 3, 1891	26	1049	1	1892	4,000.00	3,909.17	90.83
Furniture, cases, and repairs	do	26	1049	1	1892	10,000.00	9,996.55	3.45
Library	do	26	1049	1	1892	3,000.00	2,807.75	192.25
Postage	do	26	1049	1	1892	5,000.00	4,900.00	100.00
Contingent expenses	do	26	1049	1	1892	25,000.00	24,762.32	237.68
Office of Experiment Stations	do	26	1050	1	1892	20,000.00	19,989.47	10.53
Experiments in the manufacture of sugar	do	26	1050	1	1892	35,000.00	34,627.78	372.22
	Mar. 18, 1892	27	7	1				
Quarantine stations	Mar. 3, 1891	26	1050	1	1892	15,000.00	14,983.63	16.37
Bureau of Animal Industry	do	26	1045	1	1892	650,000.00	649,980.91	19.09
	Mar. 18, 1892	27	7	1				
Weather Bureau	Mar. 3, 1891	26	1051	1	1892	889,753.50	861,840.83	27,912.67
Salaries	July 5, 1892	27	74	1	1893	256,800.00	253,896.30	2,903.70
Collecting agricultural statistics	do	27	76	1	1893	110,000.00	95,649.21	14,350.79
Botanical investigations and experiments	do	27	76	1	1893	27,500.00	27,451.55	48.45
Investigating the history and habits of insects	do	27	77	1	1893	17,800.00	17,290.80	509.20
Investigations in ornithology and mammalogy	do	27	77	1	1893	15,000.00	14,947.77	52.23
Pomological information	do	27	77	1	1893	5,000.00	4,745.94	254.06
Microscopical investigations	do	27	77	1	1893	2,000.00	1,982.98	17.02
Vegetable pathology	do	27	77	1	1893	20,000.00	19,977.38	22.62
Laboratory	do	27	77	1	1893	19,400.00	18,002.59	1,397.41
Fiber investigations	do	27	78	1	1893	5,000.00	4,997.07	2.93
Forest investigations	do	27	78	1	1893	12,000.00	11,933.39	66.61
Illustrations and engravings	do	27	78	1	1893	2,000.00	1,906.73	93.27
Purchase and distribution of seeds	do	27	78	1	1893	135,400.00	134,908.27	491.73
Document and folding room	do	27	78	1	1893	2,000.00	1,623.55	376.45
Experimental garden and grounds	do	27	78	1	1893	28,500.00	28,115.09	384.91

Statement of appropriations, disbursements, and unexpended balances for the United States Department of Agriculture, etc.—Continued.

Purpose.	Date of appropriation act.	Reference to Statutes at Large. Vol.	Page.	Sec.	Fiscal year.	Amount appropriated.	Amount disbursed.	Amount unexpended.
Museum	July 5, 1892	27	79	1	1893	$4,000.00	$3,973.67	$26.33
Furniture, cases, and repairs	do	27	79	1	1893	10,000.00	8,931.97	1,068.03
Library	do	27	79	1	1893	3,000.00	2,535.29	464.71
Postage	do	27	79	1	1893	5,000.00	3,705.00	1,295.00
Contingent expenses	do	27	79	1	1893	25,000.00	22,218.19	2,781.81
Experiment stations	do	27	80	1	1893	20,000.00	18,987.65	1,012.35
Experiments in the manufacture of sugar	do	27	80	1	1893	20,000.00	19,984.86	15.14
Irrigation investigations	do	27	76	1	1893	6,000.00	4,930.67	1,069.33
Quarantine stations	do	27	80	1	1893	15,000.00	12,633.23	2,366.77
Experiments in the production of rainfall	do	27	76	1	1893	10,000.00	4,979.59	5,020.41
Bureau of Animal Industry	do	27	79	1	1893	850,000.00	724,696.74	125,303.26
Weather Bureau	do	27	81	1	1893	913,660.72	890,424.77	23,235.95
Salaries	Mar. 3, 1893	27	734	1	1894	256,800.00	233,679.75	23,120.25
Collecting agricultural statistics	do	27	736 737	1	1894	110,000.00	91,080.20	18,919.80
Botanical investigations and experiments	do	27	737	1	1894	30,000.00	24,401.40	5,598.60
Investigating the history and habits of insects	do	27	737	1	1894	20,300.00	16,203.96	4,096.04
Investigations in ornithology and mammalogy	do	27	737	1	1894	17,500.00	17,450.00	50.00
Pomological information	do	27	738	1	1894	5,000.00	4,248.99	751.01
Microscopical investigations	do	27	738	1	1894	2,000.00	1,117.55	882.45
Vegetable pathology	do	27	738	1	1894	20,000.00	17,576.95	2,423.05
Laboratory	do	27	738	1	1894	21,900.00	10,426.79	11,473.21
Fiber investigations	do	27	738	1	1894	5,000.00	2,500.47	2,499.53
Forestry investigations	do	27	738	1	1894	20,000.00	19,995.96	4.04
Illustrations and engravings	do	27	738	1	1894	2,000.00	664.79	1,335.21
Purchase and distribution of seeds	do	27	738	1	1894	135,400.00	119,719.76	15,680.24
Document and folding room	do	27	739	1	1894	2,000.00	1,662.81	337.19
Experimental garden and grounds	do	27	739	1	1894	31,500.00	26,616.86	4,883.14
Museum	do	27	739	1	1894	4,000.00	2,787.22	1,212.78
Furniture, cases, and repairs	do	27	739	1	1894	10,000.00	8,628.76	1,371.24
Library	do	27	739	1	1894	3,000.00	2,900.07	99.93
Postage	do	27	740	1	1894	5,000.00	1,375.00	3,625.00
Contingent expenses	do	27	740	1	1894	25,000.00	20,493.04	4,506.96
Experiment stations	do	27	740	1	1894	25,223.50	22,381.85	2,841.65
Inquiries relating to public roads	do	27	737	1	1894	10,000.00	2,997.39	7,002.61
Experiments in the manufacture of sugar	do	27	741	1	1894	20,107.33	9,451.80	10,655.53
Irrigation investigations	do	27	741	1	1894	6,000.00	5,475.92	524.08
Quarantine stations	do	27	740	1	1894	15,000.00	6,263.92	8,736.08
Bureau of Animal Industry	do	27	740	1	1894	850,000.00	496,111.34	353,888.66
Weather Bureau	do	27	741	1	1894	951,124.75	811,256.73	139,868.02
Salaries	Aug. 18, 1894	28	266	1	1895	249,876.16	204,589.72	45,286.44
Collecting agricultural statistics	do	28	266	1	1895	110,000.00	95,125.67	14,874.33
Botanical investigations and experiments	do	28	267	1	1895	30,000.00	25,695.30	4,304.70
Ivestigating the history and habits of insects	do	28	267	1	1895	20,300.00	16,822.87	3,477.13
Investigations in ornithology, etc	do	28	267	1	1895	17,500.00	15,526.35	1,973.65
Pomological information	do	28	267	1	1895	5,000.00	4,920.23	79.77
Microscopical investigations	do	28	267	1	1895	2,000.00	313.87	1,686.13
Vegetable pathological investigations, etc	do	28	267	1	1895	20,000.00	19,063.69	936.31
Laboratory	do	28	267	1	1895	14,900.00	11,010.50	3,889.50
Fiber investigations	do	28	271	1	1895	5,000.00	3,973.81	1,026.19
Report on forestry	do	28	268	1	1895	20,000.00	19,908.23	91.77
Illustrations and engravings	do	28	268	1	1895	15,000.00	9,114.71	5,855.29
Purchase and distribution of valuable seeds	do	28	269	1	1895	165,400.00	120,545.15	44,854.85
Document and folding room	do	28	268	1	1895	2,000.00	1,166.83	833.17
Experimental gardens and grounds	do	28	268	1	1895	29,500.00	23,578.11	5,921.89
Museum	do	28	271	1	1895	3,000.00	1,889.73	1,110.27
Furniture, cases, and repairs	do	28	271	1	1895	10,000.00	7,952.27	2,047.73
Library	do	28	272	1	1895	6,000.00	5,963.20	36.80
Postage	do	28	271	1	1895	5,000.00	765.00	4,235.00
Nutrition investigations	do	28	271	1	1895	10,000.00	9,746.30	253.70

Statement of appropriations, disbursements, and unexpended balances for the United States Department of Agriculture, etc.—Continued.

Purpose.	Date of appropriation act.	Reference to Statutes at Large.			Fiscal year.	Amount appropriated.	Amount disbursed.	Amount unexpended.
		Vol.	Page.	Sec.				
Contingent expenses	Aug. 18, 1894	28	272	1	1895	$25,000.00	$20,452.79	$4,547.21
Agricultural experiment stations	do	28	271	1	1895	25,000.00	24,928.22	71.78
Inquiries relating to public roads	do	28	266	1	1895	10,000.00	6,901.66	3,098.34
Experiments in the manufacture of sugar	do	28	271	1	1895	10,000.00	6,188.80	3,811.20
Irrigation investigations	do	28	271	1	1895	6,000.00	3,904.88	2,095.12
Quarantine stations for neat cattle	do	28	269	1	1895	12,000.00	6,262.17	5,737.83
Bureau of Animal Industry	do	28	269	1	1895	800,000.00	534,028.38	265,971.62
Weather Bureau	do	28	272	1	1895	878,438.84	820,691.94	57,746.90
Salaries	Mar. 2, 1895	28	727	1	1896	252,840.00	217,066.97	35,773.03
Collecting agricultural statistics	do	28	729	1	1896	110,000.00	68,628.99	41,371.01
Inquiries relating to public roads	do	28	729	1	1896	10,000.00	9,568.39	431.61
Botanical investigations and experiments	do	28	730	1	1896	25,000.00	20,325.37	4,674.63
Investigating the history and habits of insects	do	28	730	1	1896	20,000.00	17,372.43	2,627.57
Investigations in ornithology and mammalogy	do	28	730	1	1896	17,500.00	16,175.45	1,324.55
Pomological information	do	28	730	1	1896	6,000.00	4,996.41	1,003.59
Microscopical investigations	do	28	730	1	1896	2,000.00	.....	2,000.00
Vegetable pathological investigations and experiments	do	28	730	1	1896	20,000.00	18,539.18	1,460.82
Laboratory	do	28	730	1	1896	14,900.00	11,458.53	3,441.47
Report on forestry	do	28	731	1	1896	25,000.00	18,398.12	6,601.88
Illustrations and engravings	do	28	731	1	1896	15,000.00	12,985.71	2,014.29
Document and folding room	do	28	731	1	1896	2,000.00	1,061.23	938.77
Experimental gardens and grounds	do	28	731	1	1896	29,500.00	22,371.15	7,128.85
Quarantine stations for neat cattle	do	28	733	1	1896	12,000.00	6,492.05	5,507.95
Purchase and distribution of valuable seeds	do	28	733	1	1896	185,400.00	126,476.87	58,923.13
Experiments in the manufacture of sugar	do	28	734	1	1896	10,000.00	1,510.94	8,489.06
Agricultural experiment stations ($750,000 [a])	do	28	734	1	1896	[b] 30,143.75	27,712.86	2,430.89
Irrigation investigations	do	28	735	1	1896	15,000.00	5,029.82	9,970.18
Nutrition investigations	do	28	735	1	1896	15,000.00	14,892.96	107.04
Investigations and experiments with grasses and forage plants	do	28	735	1	1896	15,000.00	13,329.47	1,670.53
Investigations in relation to agricultural soils	do	28	735	1	1896	15,000.00	13,524.84	1,475.16
Furniture, cases, and repairs	do	28	735	1	1896	10,000.00	8,645.98	1,354.02
Postage	do	28	735	1	1896	2,000.00	1,215.00	785.00
Museum	do	28	735	1	1896	3,000.00	2,161.90	838.10
Fiber investigations	do	28	735	1	1896	5,000.00	3,710.36	1,289.64
Library	do	28	735	1	1896	6,000.00	5,431.92	568.08
Contingent expenses	do	28	736	1	1896	25,000.00	15,912.71	9,087.29
Bureau of Animal Industry	do	28	731	1	1896	800,000.00	595,336.64	204,663.36
Weather Bureau	do	28	736	1	1896	[c] 885,729.47	814,584.17	71,145.30
Salaries	Apr. 25, 1896	29	99	1	1897	313,860.00	290,791.95	23,068.05
Furniture, cases, and repairs	do	29	105	1	1897	12,000.00	9,567.59	2,432.41
Library	do	29	104	1	1897	7,000.00	6,831.15	168.85
Museum	do	29	105	1	1897	3,000.00	2,895.45	104.55
Postage	do	29	105	1	1897	3,000.00	1,730.00	1,270.00
Contingent expenses	do	29	105	1	1897	25,000.00	22,980.29	2,019.71
Animal quarantine stations	do	29	105	1	1897	12,000.00	6,564.19	5,435.81
Collecting agricultural statistics	do	29	101	1	1897	110,000.00	83,067.62	26,932.38
Botanical investigations and experiments	do	29	101	1	1897	15,000.00	14,999.64	.36
Entomological investigations	do	29	102	1	1897	20,000.00	18,637.01	1,362.99
Vegetable pathological investigations	do	29	102	1	1897	20,000.00	19,274.15	725.85
Biological investigations	do	29	102	1	1897	17,500.00	17,483.05	16.95
Pomological investigations	do	29	102	1	1897	6,000.00	4,981.52	1,018.48

[a] Of this amount $720,000 was paid directly to the experiment stations from the Treasury Department.

[b] Includes $143.75 *from the sale of* card index.

[c] *Includes $119.47 from the sale of* Weather Bureau publications.

Statement of appropriations, disbursements, and unexpended balances for the United States Department of Agriculture, etc.—Continued.

Purpose.	Date of appropriation act.	Reference to Statutes at Large.			Fiscal year.	Amount appropriated.	Amount disbursed.	Amount unexpended.
		Vol.	Page.	Sec.				
Laboratory	Apr. 25, 1896	29	102	1	1897	$12,400.00	$10,800.18	$1,599.82
Forestry investigations	do	29	103	1	1897	20,000.00	19,514.88	485.12
Experimental gardens and grounds	do	29	103	1	1897	20,000.00	19,483.28	516.72
Soil investigations	do	29	103	1	1897	10,000.00	9,868.16	131.84
Grass and forage plant investigations	do	29	103	1	1897	10,000.00	9,203.14	796.86
Fiber investigations	do	29	103	1	1897	5,000.00	4,143.00	857.00
Agricultural experiment stations ($750,000) [a]	do	29	103	1	1897	[b] 30,127.25	29,171.57	955.68
Nutrition investigations	do	29	104	1	1897	15,000.00	14,821.64	178.36
Public road inquiries	do	29	104	1	1897	8,000.00	7,873.97	126.03
Publications	do	29	104	1	1897	70,000.00	67,709.89	2,290.11
Purchase and distribution of valuable seeds	do	29	106	1	1897	150,000.00	142,822.52	7,177.48
Bureau of Animal Industry	do	29	106	1	1897	650,000.00	642,715.68	7,284.32
Weather Bureau	do	29	107	1	1897	[c] 883,876.28	870,581.46	13,294.82
Salaries, officers and clerks	Apr. 23, 1897	30	1	1	1898	319,300.00	285,181.30 18,962.98 9,811.02	5,118.70 37.02 188.98
Furniture, cases, and repairs	do	30	8	1	1898	9,000.00	7,851.30	1,148.70
Library	do	30	7	1	1898	7,000.00	6,734.81	265.19
Museum	do	30	8	1	1898	3,000.00	2,906.02	93.98
Postage	do	30	8	1	1898	3,000.00	1,500.00	1,500.00
Contingent expenses	do	30	8	1	1898	25,000.00	22,061.73	2,938.27
Animal quarantine stations	do	30	7	1	1898	12,000.00	10,897.98	1,102.02
Collecting agricultural statistics	do	30	3	1	1898	110,000.00	92,896.01 9,021.09	7,103.99 978.91
Botanical investigations and experiments	do	30	4	1	1898	15,000.00	14,714.50	285.50
Entomological investigations	do	30	4	1	1898	20,000.00	19,735.02	264.98
Vegetable pathological investigations	do	30	4	1	1898	20,000.00	18,966.67 660.00	373.33 .....
Biological investigations	do	30	4	1	1898	17,500.00	16,160.90	1,339.10
Pomological investigations	do	30	4	1	1898	8,000.00	7,487.93	512.07
Laboratory	do	30	5	1	1898	12,400.00	3,913.86 900.00 6,718.71	86.14 ..... 781.29
Forestry investigations	do	30	5	1	1898	20,000.00	19,831.32	168.68
Experimental gardens and grounds	do	30	5	1	1898	25,000.00	24,937.31	62.69
Soil investigations	do	30	5	1	1898	10,000.00	9,199.82 660.00	140.18 .....
Grass and forage plant investigations	do	30	6	1	1898	10,000.00	8,877.68	1,122.32
Fiber investigations	do	30	6	1	1898	5,000.00	3,659.05	1,340.95
Agricultural experiment stations ($755,000 [a])	do	30	6	1	1898	35,000.00	29,413.10 4,925.80	586.90 74.20
Nutrition investigations	do	30	6	1	1898	15,000.00	14,872.88	127.12
Public road inquiries	do	30	7	1	1898	8,000.00	7,978.44	21.56
Publications, including Farmers' Bulletins	do	30	7	1	1898	65,000.00	34,966.55 29,812.59	33.45 187.41
Investigating production of domestic sugar	do	30	39	1	1898	5,000.00	4,941.32	58.68
Purchase and distribution of valuable seeds	do	30	8	1	1898	130,000.00	121,870.38	8,129.62
Salaries and expenses, Bureau of Animal Industry	do	30	9	1	1898	675,000.00	673,444.02 1,200.00	355.98 .....
Weather Bureau	do	30	9	1	1898	883,702.00	877,838.35	5,863.65
Salaries, officers and clerks	Mar. 22, 1898	30	330	1	1899	319,300.00	315,986.70	3,313.30
Furniture, cases, and repairs	do	30	336	1	1899	9,000.00	8,667.75	332.25
Library	do	30	336	1	1899	6,000.00	5,659.51	340.49
Museum	do	30	336	1	1899	1,500.00	1,465.36	34.64
Postage	do	30	336	1	1899	2,000.00	2,000.00	.....
Contingent expenses	do	30	337	1	1899	25,000.00	23,888.08	1,111.92
Animal quarantine stations	do	30	336	1	1899	12,000.00	11,833.38	166.62
Collecting agricultural statistics	do	30	333	1	1899	105,000.00	100,952.48	4,047.52
Botanical investigations and experiments	do	30	333	1	1899	20,000.00	19,972.07	27.93

[a] Of this amount $720,000 was paid directly to the experiment stations from the Treasury Department.
[b] Includes $127.25 from the sale of card index.
[c] *Includes* $104.28 from the sale of Weather Bureau publications.

Statement of appropriations, disbursements, and unexpended balances for the United States Department of Agriculture, etc.—Continued.

Purpose.	Date of appropriation act.	Reference to Statutes at Large.			Fiscal year.	Amount appropriated.	Amount disbursed.	Amount unexpended.
		Vol.	Page.	Sec.				
Entomological investigations	Mar. 22, 1898	30	333	1	1899	$20,000.00	$19,812.64	$187.36
Vegetable pathological investigations	do	30	333	1	1899	20,000.00	19,634.32	365.68
Biological investigations	do	30	334	1	1899	17,500.00	17,373.26	126.74
Pomological investigations	do	30	334	1	1899	9,500.00	8,248.18	1,251.82
Laboratory	do	30	334	1	1899	12,400.00	12,028.15	371.85
Forestry investigations	do	30	334	1	1899	20,000.00	19,520.52	469.48
Experimental gardens and grounds	do	30	334	1	1899	20,000.00	19,879.66	120.34
Soil investigations	do	30	334	1	1899	10,000.00	9,885.85	114.15
Grass and forage plant investigations	do	30	335	1	1899	10,000.00	9,950.99	49.01
Irrigation information	do	30	335	1	1899	10,000.00	9,997.49	2.51
Agricultural experiment stations ($760,000 [a])	do	30	335	1	1899	40,000.00	39,536.38	463.62
Nutrition investigations	do	30	335	1	1899	15,000.00	14,903.08	96.92
Public road inquiries	do	30	336	1	1899	8,000.00	7,469.50	530.50
Publications	do	30	336	1	1899	65,000.00	64,773.62	226.38
Purchase and distribution of valuable seeds	do	30	337	1	1899	130,000.00	128,350.61	1,649.39
Investigating production of domestic sugar	do	30	338	1	1899	7,000.00	6,860.30	139.70
Salaries and expenses, Bureau of Animal Industry	do	30	338	1	1899	900,000.00	[b] 920,164.47	6,828.45
Weather Bureau	do	30	339	1	1899	1,015,502.00	1,008,971.30	6,530.70
Salaries, officers and clerks	Mar. 1, 1899	30	947	1	1900	336,340.00	330,666.24	5,673.76
Furniture, cases, and repairs	do	30	955	1	1900	10,000.00	9,771.27	228.73
Library	do	30	954	1	1900	5,000.00	4,291.17	708.83
Museum	do	30	954	1	1900	1,500.00	1,490.01	9.99
Postage	do	30	954	1	1900	2,000.00	2,000.00	.....
Contingent expenses	do	30	955	1	1900	25,000.00	23,769.38	1,230.62
Animal quarantine stations	do	30	954	1	1900	12,000.00	11,477.87	522.13
Collecting agricultural statistics	do	30	950	1	1900	110,000.00	107,653.62	2,346.38
Botanical investigations and experiments	do	30	950	1	1900	20,000.00	19,689.51	310.49
Entomological investigations	do	30	951	1	1900	20,000.00	19,920.64	79.36
Vegetable pathological investigations	do	30	951	1	1900	26,000.00	25,854.44	145.56
Biological investigations	do	30	951	1	1900	17,500.00	17,344.00	156.00
Pomological investigations	do	30	951	1	1900	9,500.00	9,099.61	400.39
Laboratory	do	30	951	1	1900	17,700.00	17,182.80	517.20
Forestry investigations	do	30	952	1	1900	40,000.00	39,991.49	8.51
Experimental gardens and grounds	do	30	952	1	1900	28,000.00	27,589.66	410.34
Soil investigations	do	30	952	1	1900	20,000.00	19,717.02	282.98
Grass and forage plant investigations	do	30	952	1	1900	12,000.00	11,566.84	433.16
Irrigation investigations	do	30	953	1	1900	35,000.00	33,732.57	1,267.43
Agricultural experiment stations ($765,000 [a])	do	30	953	1	1900	45,000.00	43,702.20	1 297.80
Nutrition investigations	do	30	953	1	1900	15,000.00	14,950.86	49.14
Public road inquiries	do	30	954	1	1900	8,000.00	7,854.35	145.65
Publications	do	30	954	1	1900	80,000.00	79,516.76	483.24
Purchase and distribution of valuable seeds	do	30	955	1	1900	130,000.00	128,366.13	1,633.87
Investigating production of domestic sugar	do	30	956	1	1900	7,000.00	6,717.82	282.18
Tea-culture investigations	do	30	956	1	1900	1,000.00	999.33	.67
Salaries and expenses, Bureau of Animal Industry	do	30	956	1	1900	950,000.00	918,449.03	31,550.97
Weather Bureau	do	30	957	1	1900	1,022,482.00	1,014,238.80	8,243.20
Salaries, officers and clerks	May 20, 1900	31	191	1	1901	326,680.00	319,809.25	6,870.75
Library	do	31	194	1	1901	5,000.00	4,118.93	881.07
Contingent expenses	do	31	194	1	1901	37,000.00	35,623.95	1,376.05
Animal quarantine stations	do	31	194	1	1901	50,000.00	49,343.52	656.48
Collecting agricultural statistics	do	31	194	1	1901	110,000.00	109,729.76	270.24
Botanical investigations and experiments	do	31	195	1	1901	30,000.00	29,590.49	409.51
Entomological investigations	do	31	195	1	1901	22,500.00	22,265.57	234.43
Vegetable pathological investigations	do	31	195	1	1901	28,000.00	27,488.51	511.49

[a] Of this amount $720,000 was paid directly to the experiment stations from the Treasury Department.
[b] Includes $26,992.92 received from sale of American products in Europe.

Statement of appropriations, disbursements, and unexpended balances for the United States Department of Agriculture, etc.—Continued.

Purpose.	Date of appropriation act.	Reference to Statutes at Large.			Fiscal year.	Amount appropriated.	Amount disbursed.	Amount unexpended.
		Vol.	Page.	Sec.				
Biological investigations	Mar. 1, 1899	31	196	1	1901	$17,500.00	$17,195.83	$304.17
Pomological investigations	do	31	196	1	1901	9,500.00	9,315.11	184.89
Laboratory	do	31	196	1	1901	28,500.00	28,395.45	104.55
Forestry investigations	do	31	197	1	1901	80,000.00	79,695.87	304.13
Experimental gardens and grounds	do	31	197	1	1901	20,000.00	19,986.72	13.28
Soil investigations	do	31	197		1901	25,000.00	24,924.94	75.06
Grass and forage plant investigations	do	31	198	1	1901	17,000.00	15,225.83	1,774.17
Irrigation investigations	do	31	199	1	1901	50,000.00	49,973.09	26.91
Agricultural experiment stations ($780,000[a])	do	31	198	1	1901	[b] 60,251.01	59,883.47	367.54
Nutrition investigations	do	31	199	1	1901	17,500.00	17,499.67	.33
Arlington experimental farm	do	31	199	1	1901	10,000.00	9,946.03	53.97
Public road inquiries	do	31	200	1	1901	14,000.00	13,990.76	9.24
Publications	do	31	200	1	1901	105,000.00	104,680.67	319.33
Purchase and distribution of valuable seeds	do	31	200	1	1901	170,000.00	149,615.49	20,384.51
Investigating production of domestic sugar	do	31	201	1	1901	7,000.00	6,690.25	309.75
Tea-culture investigations	do	31	202	1	1901	5,000.00	4,959.42	40.58
Salaries and expenses, Bureau of Animal Industry	do	31	202	1	1901	[c] 1,000,514.96	976,566.75	23,948.21
Salaries, Weather Bureau	do	31	202	1	1901	153,320.00	152,688.11	631.89
Fuel, lights, and repairs, Weather Bureau	do	31	203	1	1901	9,000.00	8,877.36	122.64
Contingent expenses, Weather Bureau	do	31	203	1	1901	8,000.00	7,906.40	93.60
General expenses, Weather Bureau	do	31	203	1	1901	828,000.00	823,921.78	4,078.22
Meteorological Observation Stations, Weather Bureau	do	31	204	1	1901	60,000.00	59,019.49	980.51
Salaries	Mar. 2, 1901	31	922	1	1902	373,820.00	370,039.69	3,780.31
Library	do	31	934	1	1902	7,000.00	6,754.06	245.94
Contingent expenses	do	31	934	1	1902	37,000.00	34,543.24	2,456.76
Animal quarantine stations	do	31	926	1	1902	25,000.00	24,814.88	185.12
Collecting agricultural statistics	do	31	934	1	1902	120,000.00	117,060.06	2,939.94
Botanical investigations and experiments	do	31	928	1	1902	45,000.00	44,950.93	49.07
Entomological investigations	do	31	931	1	1902	28,513.18	27,069.77	1,443.41
Vegetable pathological investigations	do	31	927	1	1902	60,000.00	59,999.45	.55
Biological investigations	do	31	932	1	1902	20,000.00	19,807.80	192.20
Pomological investigations	do	31	927	1	1902	20,000.00	19,985.14	14.86
Laboratory	do	31	930	1	1902	24,500.00	24,417.47	82.53
Forestry investigations	do	31	929	1	1902	146,280.00	145,809.76	470.24
Experimental gardens and grounds	do	31	929	1	1902	20,000.00	19,725.80	274.20
Soil investigations	do	31	931	1	1902	91,000.00	89,987.21	1,012.79
Grass and forage plant investigations	do	31	928	1	1902	20,000.00	19,566.91	433.09
Irrigation investigations	do	31	936	1	1902	50,000.00	49,980.86	19.14
Agricultural experiment stations ($780,000[a])	do	31	935	1	1902	[d] 69,157.05	69,052.71	104.34
Nutrition investigations	do	31	936	1	1902	20,000.00	19,951.48	48.52
Arlington experimental farm	do	31	936	1	1902	10,000.00	9,897.16	102.84
Plans for building Department of Agriculture, 1901-2	do	31	938		1902	5,000.00	5,000.00	.....
Public road inquiries	do	31	938		1902	20,000.00	19,957.01	42.99
Publications	do	31	933		1902	188,000.00	187,657.52	342.48
Purchase and distribution of valuable seeds	do	31	937		1902	270,000.00	266,614.22	3,385.78
Investigating production of domestic sugar	do	31	936		1902	5,000.00	4,346.31	653.69
Tea-culture investigations	do	31	937		1902	7,000.00	6,816.25	183.75
Bureau of Animal Industry	do	31	925		1902	1,092,190.28	1,092,100.94	89.34
Weather Bureau:								
Salaries	do	31	923	1	1902	159,820.00	159,769.71	50.59
Fuel, lights, and repairs	do	31	923	1	1902	9,000.00	8,919.71	80.29

[a] Of this amount $720,000 was paid directly to the experiment stations from the Treasury Department.
[b] Including $251.01 received from sales of card index.
[c] *Including* $514.96 received from sales of American butter in foreign markets.
[d] *Including* $157.05 received from sales of card index.

Statement of appropriations, disbursements, and unexpended balances for the United States Department of Agriculture, etc.—Continued.

Purpose.	Date of appropriation act.	Reference to Statutes at Large. Vol.	Pages.	Sec.	Fiscal year.	Amount appropriated.	Amount disbursed.	Amount unexpended.
Weather Bureau—Continued.								
Contingent expenses	Mar. 2, 1901	31	923	1	1902	$8,000.00	$7,942.81	$57.19
General expenses	do	31	923	1	1902	865,500.00	864,490.74	1,009.26
Meteorological observation stations	do	31	924	1	1902	60,000.00	59,646.49	353.51
Buildings	do	31	924	1	1902	46,000.00	46,000.00	.....
Salaries	June 3, 1902	32	286	1	1903	465,500.00	450,976.17	14,523.83
Library	do	32	300	1	1903	8,000.00	7,635.11	364.89
Contingent expenses	do	32	301	1	1903	37,000.00	42,916.14	83.86
Urgent deficiency, contingent	do	32	1062	1	1903	6,000.00		
Vegetable pathological investigations	do	32	291	1	1903	105,000.00	103,646.28	1,353.72
Vegetable pathological investigations, 1902-3	do	32	1152	1	1903	5,000.00	4,130.02	869.98
Pomological investigations	do	32	291	1	1903	30,000.00	29,606.83	393.17
Botanical investigations and experiments	do	32	292	1	1903	55,000.00	54,900.42	99.58
Grass and forage plant investigations	do	32	292	1	1903	30,000.00	29,527.41	472.59
Experimental gardens and grounds	do	32	293	1	1903	25,000.00	24,935.74	64.26
Arlington Experimental Farm	do	32	293	1	1903	15,000.00	14,998.81	1.19
Investigating production of domestic sugar	do	32	295	1	1903	5,000.00	4,065.10	934.90
Tea-culture investigations	do	32	293	1	1903	10,000.00	7,500.10	2,499.90
Purchase and distribution of valuable seeds	do	32	293	1	1903	270,000.00	266,229.81	3,770.19
Forestry investigations	do	32	295	1	1903	254,000.00	244,781.68	9,218.32
Laboratory	do	32	296	1	1903	60,500.00	59,518.91	918.09
Soil investigations	do	32	297	1	1903	130,000.00	128,408.15	1,591.85
Entomological investigations	do	32	298	1	1903	37,500.00	37,485.44	14.56
Entomological investigations, 1902-3	do	32	298	1	1903	8,000.00	7,989.42	10.58
Biological investigations	do	32	298	1	1903	26,000.00	25,616.80	383.20
Biological investigations, 1902-3	do	32	298	1	1903	2,000.00	1,949.61	50.39
Urgent deficiency publications	do	32	1062	1	1903	200,000.00 4,000.00	190,961.49	13,038.51
Collecting agricultural statistics	do	32	300	1	1903	94,200.00	94,023.27	176.73
Agricultural experiment stations ($796,000 [a])	do	32	301	1	1903	76,000.00	77,552.69	333.31
Amount of deposits	do	32	301	1	1903	[b] 1,886.00		
Nutrition investigations	do	32	302	1	1903	20,000.00	19,901.12	98.88
Irrigation investigations	do	32	302	1	1903	65,000.00	62,201.12	2,798.88
Public road inquiries	do	32	302	1	1903	30,000.00	29,996.13	3.87
Foreign market investigations	do	32	300	1	1903	6,500.00	6,140.02	359.98
Silk investigations	do	32	303	1	1903	10,000.00	7,133.32	2,866.68
Expenses, Bureau of Animal Industry	do	32	289	1	1903	1,660,000.00	1,444,113.05	215,886.95
Urgent deficiency, Bureau of Animal Industry	do	32	1165	1	1903	500,000.00		
Weather Bureau:								
Salaries	do	32	286	1	1903	165,260.00	164,927.46	332.54
Fuel, lights, and repairs	do	32	287	1	1903	10,000.00	9,964.65	35.35
Contingent expenses	do	32	287	1	1903	8,000.00	7,806.38	193.62
General expenses	do	32	287	1	1903	915,000.00	428,219.24 480,377.71	1,280.76 5,622.29
Meteorological observation stations	do	32	288	1	1903	60,000.00	59,628.24	371.76
Buildings	do	32	288	1	1903	50,000.00	49,467.00	533.00
Cables and land lines	do	32	288	1	1903	40,000.00	40,000.00	.....
Storm-warning stations, Glenhaven and South Manitou Island, Mich	do	32	288	1	1903	15,000.00	15,000.00	.....
Salaries, Department of Agriculture, officers and clerks	Mar. 3, 1903	32	1147	1	1904	470,080.00	458,295.90	11,784.10
Salaries, extra laborers	do	32	1147	1	1904	1,000.00	982.01	17.99
Bureau of Animal Industry:								
General expenses, including $1,800 for rent of building	do	32	1150	1	1904	1,200,000.00	1,199,410.98	589.02
To eradicate contagious diseases of animals	do					250,000.00	249,868.64	131.06

[a] Of this amount $720,000 was paid directly to the experiment stations from the Treasury Department.
[b] Receipts from sales of certain products of Alaska, Hawaii, and Porto Rico experiment stations.

Statement of appropriations, disbursements, and unexpended balances for the United States Department of Agriculture, etc.—Continued.

Purpose.	Date of appropriation act.	Reference to Statutes at Large. Vol.	Page.	Sec.	Fiscal year.	Amount appropriated.	Amount disbursed.	Amount unexpended.
Bureau of Plant Industry:								
Vegetable pathological investigations	Mar. 3, 1903	32	1152	1	1904	$122,000.00	$122,889.98	$0.06
Rent of building	do	32	1152	1	1904	3,000.00	2,109.96	
Vegetable pathological investigations, 1903-4	do	32	1152	1	1904	5,000.00	4,998.41	1.59
Pomological investigations	do	32	1153	1	1904	37,000.00	35,636.08	1,363.92
Botanical investigations and experiments	do	32	1153	1	1904	62,000.00	60,693.23	1,306.77
Rent of building	do	32	1153	1	1904	3,000.00	3,000.00	.....
Grass and forage plant investigations	do	32	1154	1	1904	33,800.00	34,514.48	235.52
Rent of building	do	32	1154	1	1904	1,200.00	250.00	
Experimental gardens and grounds, Department of Agriculture	do	32	1154	1	1904	25,000.00	24,984.11	15.89
Arlington Experimental Farm	do	32	1155		1904	15,000.00	14,972.99	27.01
Tea-culture investigations	do	32	1155	1	1904	10,000.00	8,701.07	1,298.93
Purchase and distribution of valuable seeds	do	32	1155	1	1904	257,000.00	257,247.74	256.26
Foreign seed and plant introduction	do	32	1155	1	1904	30,000.00	27,483.93	2,012.07
Rent of building	do	32	1156	1	1904	3,000.00	.....	3,000.00
Investigating production of domestic sugar	do	32	1156	1	1904	5,000.00	4,249.41	750.59
Bureau of Forestry:								
Forestry investigations, including $10,000 for rent of building	do	32	1156	1	1904	312,860.00	311,588.63	1,271.37
Protection of forest reserves [a]	do	...	...	...	...	16,864.01	341.12	16,522.89
Bureau of Chemistry:								
Laboratory, including $5,000 for table sirup	do	32	1157	1	1904	60,500.00	60,317.39	182.61
Laboratory, table sirup, 1903-4	do	32	1157	1	1904	10,000.00	9,898.89	101.11
Bureau of Soils, including $2,000 for rent of building	do	32	1159	1	1904	170,000.00	166,286.32	3,713.68
Entomological investigations	do	32	1160	1	1904	43,500.00	39,114.76	4,385.24
Silk investigations	do	32	1160	1	1904	10,000.00	9,055.31	944.69
Entomological investigations, 1903-4	do	32	1160	1	1904	12,000.00	11,825.82	174.18
Biological investigations, including $1,000 for care of game	do	32	1160	1	1904	34,000.00	33,066.92	933.08
Publications, Department of Agriculture, Farmers' Bulletins	do	32	1161	1	1904	105,000.00	104,997.90	2.10
Artists, etc	do	32	1161	1	1904	10,000.00	9,992.49	7.51
Labor, etc	do	32	1161	1	1904	85,000.00	84,746.73	253.27
Collecting agricultural statistics	do	32	1162	1	1904	104,200.00	103,225.90	974.10
Collecting agricultural statistics, 1903-4	do	32	1162	1	1904	5,000.00	4,996.84	3.16
Foreign-market investigations	do	32	1162	1	1904	7,500.00	7,455.40	44.60
Library, Department of Agriculture	do	32	1163	1	1904	10,000.00	9,972.93	27.07
Contingent expenses, Department of Agriculture	do	32	1163	1	1904	37,000.00	36,999.77	.23
Agricultural experiment stations ($810,000 [b])	do	32	1163	1	1904	40,000.00	39,997.74	2.26
Stations of Alaska	do	32	1164	1	1904	15,000.00	15,000.00	.....
Stations of Hawaii	do	32	1164	1	1904	15,000.00	15,000.00	.....
Stations of Porto Rico	do	32	1164	1	1904	15,000.00	15,000.00	.....
Farmers' institutes	do	32	1164	1	1904	5,000.00	4,838.69	161.31
Nutrition investigations	do	32	1164	1	1904	20,000.00	19,994.18	5.82
Irrigation investigations	do	32	1165	1	1904	65,000.00	64,938.65	61.35
Public road inquiries	do	32	1165	1	1904	32,000.00	31,813.00	187.00
Public road inquiries, 1903-4	do	32	1165	1	1904	3,000.00	3,000.00	.....

[a] This appropriation and amount transferred from Department of Interior.
[b] Of this amount, $720,000 is paid directly to the experiment stations from the Treasury Department.

Statement of appropriations, disbursements, and unexpended balances for the United States Department of Agriculture, etc.—Continued.

Purpose.	Date of appropriation act.	Reference to Statutes at Large. Vol.	Page.	Sec.	Fiscal year.	Amount appropriated.	Amount disbursed.	Amount unexpended.
Weather Bureau:								
Salaries	Mar. 3, 1903	32	1148	1	1904	$175,440.00	$175,098.94	$341.06
Fuel, lights, and repairs	do	32	1148	1	1904	6,000.00	5,981.63	18.37
Contingent expenses	do	32	1148	1	1904	8,000.00	7,818.52	181.48
General expenses, salaries	do	32	1149	1	1904	472,300.00	471,917.22	382.78
General expenses, miscellaneous	do	32	1149	1	1904	496,780.00	494,741.03	2,038.97
Buildings	do	32	1149	1	1904	50,000.00	50,000.00	.....
Cables and land lines	do	23	1149	1	1904	40,000.00	40,000.00	.....
Salaries, officers and clerks	Apr. 23, 1904	33	276	1	1905	481,300.00	407,998.89	10,301.11
Salaries, extra laborers	do	33	277	1	1905	1,000.00	971.66	28.34
Bureau of Animal Industry:								
Deficiency appropriation	do	33	1242	1	1905	150,000.00	1,399,227.96	772.04
General expenses, including $1,800 for rent of building	do	33	279	1	1905	1,250,000.00		
Animal breeding and feeding	do	33	281	1	1905	25,000.00	20,540.67	4,459.33
To eradicate contagious diseases of animals, 1904-5[c]	do	33	5	1	1905	250,000.00	248,980.79	1,019.21
Bureau of Plant Industry:								
Vegetable pathological investigations	do	33	281	1	1905	145,000.00	145,705.01	.....
Rent of building	do	33	281	1	1905	3,000.00	2,294.99	.....
Vegetable pathological investigations, 1904-5	do	33	281	1	1905	2,000.00	2,000.00	.....
Rent of quarters (deficiency)	do	33	603	1	1905	2,500.00	2,485.00	15.00
Pomological investigations[a]	do	33	282	1	1905	43,500.00	41,280.58	2,219.42
Botanical investigations and experiments	do	33	283	1	1905	64,500.00	63,914.24	585.76
Rent of building	do	33	283	1	1905	3,000.00	3,000.00	.....
Grass and forage plant investigations	do	33	283	1	1905	40,500.00	40,012.04	487.96
Rent of building	do	33	283	1	1905	2,000.00	1,500.00	500.00
Experimental gardens and grounds, Department of Agriculture	do	33	284	1	1905	25,000.00	24,725.40	274.60
Greenhouses, Department of Agriculture, 1904-5	do	33	284	1	1905	25,000.00	24,995.32	4.68
Arlington Experimental Farm	do	33	284	1	1905	20,000.00	19,838.70	161.30
Tea-culture investigations	do	33	284	1	1905	10,000.00	8,387.15	1,612.85
Purchase and distribution of valuable seeds[b]	do	33	285	1	1905	242,500.00	240,379.71	2,120.29
Foreign seed and plant introduction[b]	do	33	286	1	1905	40,000.00	39,687.44	312.56
Repairs to building	do	33	285	1	1905	7,500.00	4,000.00	3,500.00
Investigating production of domestic sugar	do	33	286	1	1905	7,500.00	7,222.14	277.86
Bureau of Forestry:								
Forestry investigations, including $15,500 for rent of building	do	33	286	1	1905	388,000.00	386,618.32	1,381.68
Protection of Forest Reserves	do	33	286	1	1905	50,000.00	49,025.23	974.77
Testing timbers, Louisiana Purchase Exposition, St. Louis, Mo. (deficiency act)	do	33	1242	1	1905	10,000.00	9,985.82	14.18
Bureau of Chemistry:								
Laboratory, including $15,000 for table sirup	do	33	287	1	1905	105,000.00	103,693.95	1,306.05
Laboratory, 1904-5	do	33	288	1	1905	15,000.00	14,716.95	283.05
Laboratory road materials	do	33	288	1	1905	15,000.00	14,802.99	197.01
Bureau of Soils:								
Soil investigations, including $6,000 for rent of building	do	33	288	1	1905	170,000.00	168,638.84	1,361.16
Entomological investigations	do	33	289	1	1905	70,000.00	69,124.44	875.56
Cotton boll-weevil investigations, 1904-5[c]	do	33	5	1	1905	250,000.00	220,685.40	29,314.60

[a] By receipts from sale of fruits and vegetables (Pomological investigations) $2,426.21
[b] By transfer from foreign to domestic seeds 4,183.54
[c] By transfer from cotton boll weevil to Bureau of Animal Industry, 1904-5 ..... 3,000.00

Statement of appropriations, disbursements, and unexpended balances for the United States Department of Agriculture, etc.—Continued.

Purpose.	Date of appropriation act.	Reference to Statutes at Large. Vol.	Page.	Sec.	Fiscal year.	Amount appropriated.	Amount disbursed.	Amount unexpended.
Biological investigations	Apr. 23, 1904	33	290	1	1905	$33,000.00	$32,937.70	$62.30
Biological investigations, 1904-5, care of elk	do	33	291	1	1905	1,000.00	807.14	192.86
Publications, Department of Agriculture, Farmers' Bulletins	do	33	291	1	1905	105,000.00	104,885.16	114.84
Artists, etc	do	33	291	1	1905	15,000.00	14,635.28	364.72
Labor, etc	do	33	291	1	1905	89,000.00	88,985.64	14.36
Labor, etc., 1904-5	do	33	291	1	1905	1,000.00	430.64	569.36
Collecting agricultural statistics	do	33	292	1	1905	132,000.00	130,539.73	1,460.27
Foreign-market investigations	do	33	292	1	1905	7,500.00	6,069.72	1,430.28
Library, Department of Agriculture	do	33	293	1	1905	10,000.00	9,640.28	359.72
Contingent expenses, Department of Agriculture	do	33	293	1	1905	37,000.00	36,963.20	36.80
Agricultural experiment stations ($810,000 [a])	do	33	293	1	1905	40,000.00	39,703.10	296.90
Stations of Alaska	do	33	294	1	1905	15,000.00	15,000.00	.....
Stations of Hawaii	do	33	294	1	1905	15,000.00	15,000.00	.....
Stations of Porto Rico	do	33	294	1	1905	15,000.00	15,000.00	.....
Farmers' institutes	do	33	294	1	1905	5,000.00	4,603.53	396.47
Nutrition investigations	do	33	294	1	1905	20,000.00	19,976.98	23.02
Irrigation investigations	do	33	294	1	1905	67,500.00	67,416.35	83.65
Public road inquiries	do	33	295	1	1905	35,000.00	34,319.03	680.97
Building, Department of Agriculture	do	32	806	1	1905	250,000.00	108,496.32	141,503.68
Weather Bureau:								
Salaries	do	33	277	1	1905	180,440.00	180,225.57	214.43
Fuel, lights, and repairs	do	33	278	1	1905	8,000.00	7,979.20	20.80
Contingent expenses	do	33	278	1	1905	10,000.00	9,702.60	297.40
General expenses, salaries	do	33	278	1	1905	492,300.00	491,725.31	574.69
General expenses, miscellaneous	do	33	279	1	1905	572,000.00	569,424.01	2,575.99
Buildings	do	33	279	1	1905	48,000.00	47,803.11	196.89
Cables and land lines	do	33	279	1	1905	27,000.00	26,991.09	8.91
Salaries, officers and clerks	Mar. 3, 1905	33	861	1	1906	804,970.00	782,913.30	22,056.70
Salaries, extra labor	do	33	861	1	1906	10,000.00	8,820.34	1,179.66
Bureau of Animal Industry:								
Deficiency act	Feb. 27, 1906	.....	.....	.....	1906	63,000.00	29,863.06	33,136.94
General expenses	Mar. 3, 1905	33	864	1	1906	1,429,020.00	1,256,254.31	172,765.69
Animal breeding and feeding	do	33	866	1	1906	25,000.00	16,651.32	8,348.68
Rent of buildings	do	33	865	1	1906	2,500.00	1,635.02	846.98
Bureau of Plant Industry:								
Vegetable pathological investigations	do	33	867	1	1906	139,640.00	122,341.52	17,298.48
Rent of building	do	33	867	1	1906	6,000.00	3,070.00	2,930.00
Vegetable pathological investigations, 1905-6	do	33	868	1	1906	10,000.00	7,278.05	2,721.95
Grain investigations	do	33	868	1	1906	25,000.00	20,040.29	4,959.71
Pomological investigations	do	33	868	1	1906	33,640.00	32,464.49	1,175.51
Rent of building	do	33	868	1	1906	2,000.00	1,870.00	130.00
Botanical investigations and experiments	do	33	869	1	1906	60,840.00	54,517.26	6,322.74
Rent of building	do	33	869	1	1906	3,000.00	2,750.00	250.00
Grass and forage plant investigations	do	33	869	1	1906	37,160.00	30,768.51	6,391.49
Rent of building	do	33	869	1	1906	2,500.00	1,375.00	1,125.00
Experimental gardens and grounds	do	33	870	1	1906	15,320.00	13,837.04	1,482.96
Experimental gardens and grounds, 1905-6	do	33	870	1	1906	5,000.00	4,807.82	192.18
Arlington experimental farm	do	33	870	1	1906	20,000.00	19,040.13	959.87
Tea-culture investigations	do	33	870	1	1906	8,500.00	6,910.79	1,589.21
Purchase and distribution of valuable seeds	do	33	870	1	1906	195,140.00	186,325.12	8,814.88
Foreign seed and plant introduction	do	33	871	1	1906	37,780.00	28,406.09	9,373.91
Repairs to building	do	33	871	1	1906	10,000.00	.....	10,000.00
Investigating production of domestic sugar	do	33	872	1	1906	7,500.00	6,489.06	1,010.94

[a] *Of this amount* $720,000 was paid directly to the experiment stations from the Treasury Department.

***Statement of appropriations, disbursements, and unexpended balances for the United States Department of Agriculture, etc.*—Continued.**

Purpose.	Date of appropriation act.	Reference to Statutes at Large. Vol.	Page.	Sec.	Fiscal year.	Amount appropriated.	Amount disbursed.	Amount unexpended.
Forest Service:								
General expenses, Forest Service	Mar. 3, 1905	33	872	1	1906	$768,180.00	$722,031.96	$46,148.04
Rent of buildings	do	33	873	1	1906	25,000.00	14,056.85	10,943.15
Bureau of Chemistry, laboratory, including $3,000 for table sirup	do	33	873	1	1906	130,920.00	117,359.87	13,560.13
Bureau of Soils, soil investigations, including $4,000 for rent of building	do	33	875	1	1906	170,000.00	162,268.42	7,731.58
Bureau of Entomology, entomological investigations, including $2,500 for moth investigations	do	33	876	1	1906	68,060.00	63,292.82	4,767.18
Bureau of Biological Survey:								
Biological investigations	do	33	877	1	1906	44,420.00	42,534.43	1,885.57
Publications, Department of Agriculture, farmers' bulletins	do	33	878	1	1906	98,750.00	96,461.42	2,288.58
Artists, etc	do	33	878	1	1906	3,500.00	3,427.08	72.92
Labor, etc	do	33	879	1	1906	30,000.00	28,036.26	1,963.74
Bureau of Statistics:								
Collecting agricultural statistics	do	33	879	1	1906	93,900.00	82,104.53	11,795.47
Foreign market investigations	do	33	879	1	1906	4,900.00	4,720.13	179.87
Library, Department of Agriculture	do	33	880	1	1906	8,040.00	6,287.16	1,752.84
Contingent expenses, Department of Agriculture	do	33	880	1	1906	35,000.00	30,597.94	4,402.06
Contingent expenses, 1905-6	do	33	880	1	1906	2,000.00	2,000.00	.....
Agricultural experiment stations ($1,034,660 [a])	do	33	881	1	1906	21,660.00	20,009.87	1,650.13
Stations of Alaska, including $3,000 for purchase of live stock	do	33	881	1	1906	18,000.00	16,800.00	1,200.00
Stations of Hawaii	do	33	881	1	1906	15,000.00	15,000.00	.....
Stations of Porto Rico	do	33	881	1	1906	15,000.00	15,000.00	.....
Farmers' institutes	do	33	882	1	1906	5,000.00	4,024.57	975.43
Nutrition investigations	do	33	882	1	1906	20,000.00	17,594.28	2,405.72
Irrigation investigations	do	33	882	1	1906	74,200.00	66,156.35	8,043.65
Public-road inquiries	do	33	882	1	1906	37,660.00	32,487.49	5,172.51
Cotton-boll weevil investigations	do	33	883	1	1906	190,000.00	143,014.07	46,985.93
Buildings, Department of Agriculture	Feb. 9, 1903	32	806	.....	.....	250,000.00 700,000.00	469,065.32	480,934.68
Weather Bureau:								
Salaries	do	33	862	1	1906	191,430.00	190,930.72	499.28
Fuel, lights, and repairs	do	33	862	1	1906	10,000.00	9,112.13	887.87
Contingent expenses	do	33	863	1	1906	10,000.00	7,879.65	2,120.35
Salaries, station employees	do	33	863	1	1906	531,550.00	487,988.40	43,561.60
General expenses	do	33	863	1	1906	562,010.00	405,296.62	156,713.38
Buildings	do	33	863	1	1906	53,000.00	52,716.93	283.07
Cables and land lines	do	33	864	1	1906	35,000.00	33,626.06	1,373.94
Salaries, officers and clerks	June 30, 1906	34	670	1	1907	750,170.00	730,481.65	19,688.35
Salaries, extra labor	do	34	670	1	1907	7,600.00	6,355.73	1,244.27
Contingent expenses	do	34	692	1	1907	37,000.00	33,014.40	3,985.60
Library	do	34	691	1	1907	10,000.00	8,046.96	1,953.04
Bureau of Animal Industry:								
General expenses	do	34	673	1	1907	809,700.00	621,918.25	187,781.75
Rent of buildings	do	34	673	1	1907	2,500.00	2,118.50	381.50
Southern dairy work	do	34	674	1	1907	20,000.00	15,647.09	4,352.91
Diseases of domestic animals, Minnesota	do	34	674	1	1907	5,000.00	1,480.33	3,519.67
Animal breeding and feeding	do	34	674	1	1907	25,000.00	18,127.92	6,872.08
Meat inspection	do	34	674	1	1907	3,000,000.00	1,932,208.19	1 067,791.81
Eradicating cattle ticks:								
1907	do	34	696	1	1907	82,500.00	80,579.29	1,920.71
1907 and 1908	Mar. 4, 1907	34	1281	1	1907	25,000.00	14,188.10	10,811.90

[a] Of this amount $960,000 was paid directly to the experiment stations from the Treasury Department.

Statement of appropriations, disbursements, and unexpended balances for the United States Department of Agriculture, etc.—Continued.

Purpose.	Date of appropriation act.	Reference to Statutes at Large. Vol.	Page.	Sec.	Fiscal year.	Amount appropriated.	Amount disbursed.	Amount unexpended.
Bureau of Plant Industry:								
General expenses	June 30, 1906	34	680	1	1907	$480,406.28	$423,760.07	$56,646.21
Rent and repairs	do	34	681	1	1907	11,300.00	10,106.75	1,193.25
Ozark Mountain investigations	do	34	681	1	1907	3,553.72	3,330.49	223.23
Grain investigations	do	34	681	1	1907	15,000.00	13,582.80	1,417.20
Improving roads	do	34	681	1	1907	3,500.00	3,472.00	28.00
Purchase and distribution of valuable seeds	do	34	682	1	1907	205,140.00	180,871.16	24,268.84
Foreign seed and plant introduction	do	34	682	1	1907	35,780.00	27,249.80	8,530.20
Erection of building at Chico, Cal	do	34	683	1	1907	2,000.00	2,000.00	.....
Cotton boll weevil investigations:								
1907	do	34	695	1	1907	105,000.00	91,545.68	13,454.32
1907 and 1908	Mar. 4, 1907	34	1280	1	1907	40,000.00	4,367.58	35,632.42
Bureau of Chemistry:								
Laboratory	June 30, 1906	34	685	1	1907	145,920.00	131,530.41	14,389.59
Enforcement of the food and drugs act	Dec. 19, 1906	34	841	1	1907	250,000.00	36,217.41	213,782.59
Bureau of Soils:								
Soils investigations	June 30, 1906	34	687	1	1907	181,000.00	168,651.81	12,348.19
Rent of buildings	do	34	687	1	1907	4,000.00	3,483.33	516.67
Bureau of Entomology:								
Entomological investigations	do	34	688	1	1907	70,000.00	65,147.09	4,852.91
White fly investigations	do	34	688	1	1907	5,000.00	4,538.24	461.76
Cotton boll weevil investigations	do	34	695	1	1907	85,000.00	58,598.72	26,401.28
Preventing spread of moths:								
1907	do	34	696	1	1907	82,500.00	80,309.35	2,190.65
1907 and 1908	Mar. 4, 1907	34	1281	1	1907	150,000.00	8,592.73	141,407.27
Bureau of Biological Survey:								
Biological investigations	June 30, 1906	34	688	1	1907	44,420.00	40,844.51	3,575.49
Division of Publications:								
Publications, farmers' Bulletins	do	34	690	1	1907	98,750.00	91,175.67	7,574.33
Artists, etc	do	34	690	1	1907	3,500.00	3,224.80	275.20
Labor, etc	do	34	690	1	1907	30,000.00	27,546.27	2,453.73
Bureau of Statistics:								
Collecting agricultural statistics	do	34	691	1	1907	108,000.00	86,756.05	21,243.95
Foreign markets investigations	do	34	691	1	1907	4,900.00	4,852.95	47.05
Office of Experiment Stations:								
Agricultural experiment stations ($803,500 [a])	do	34	693	1	1907	25,500.00	24,467.75	1,032.25
Farmers' institutes	do	34	693	1	1907	5,000.00	4,105.95	894.05
Station at Alaska, including $3,000 for purchase of live stock	do	34	693	1	1907	18,000.00	17,968.89	31.11
Station at Hawaii, including $5,000 for water supply	do	34	693	1	1907	20,000.00	20,000.00	.....
Station at Porto Rico	do	34	693	1	1907	15,000.00	15,000.00	.....
Nutrition investigations	do	34	694	1	1907	20,000.00	16,637.32	3,362.68
Irrigation investigations	do	34	694	1	1907	122,200.00	103,002.80	19,197.20
Office of Public Roads: Public road inquiries	do	34	694	1	1907	57,660.00	49,975.45	7,684.55
Weather Bureau:								
Salaries	do	34	671	1	1907	194,690.00	193,918.11	771.89
Fuel, lights, and repairs	do	34	671	1	1907	10,000.00	9,356.14	643.86
Contingent expenses	do	34	671	1	1907	10,000.00	8,915.70	1,084.30
Salaries, station employees	do	34	672	1	1907	541,550.00	497,110.47	44,439.53
General expenses	do	34	672	1	1907	630,000.00	425,736.18	204,263.82
Buildings	do	34	672	1	1907	53,000.00	24,158.31	28,841.69

[a] This includes $720,000 for State experiment stations paid through the Treasury Department. Congress also appropriated $336,000 for State experiment stations under the Adams bill to be paid through the Treasury Department. Total paid through the Treasury Department for State experiment stations, $1,056,000. Congress also appropriated in the sundry civil bill for printing and binding, $300,000.

Statement of appropriations, disbursements, and unexpended balances for the United States Department of Agriculture, etc.—Continued.

Purpose.	Date of appropriation act.	Reference to Statutes at Large. Vol.	Page.	Sec.	Fiscal year.	Amount appropriated.	Amount disbursed.	Amount unexpended.
Forest Service:								
Salaries, officers and clerks	June 30, 1906	34	683	1	1907	$112,860.00	$102,826.06	$10,033.94
General expenses	do	34	683	1	1907	849,640.00	641,033.95	208,606.05
Rent	do	34	685	1	1907	35,000.00	20,266.62	14,733.38
Building on Dismal River Forest Reserve	do	34	696	1	1907	2,500.00	2,475.22	24.78
Wichita Forest and Game Preserve	do	34	696	1	1907	15,000.00		15,000.00
Survey and report on Appalachian and White Mountain watersheds, 1907 and 1908	Mar. 4, 1907	34	1281	1	1907	25,000.00	857.14	24,142.86
Administration, etc., of the national forests, 1907 and 1908	do	34	1270	1	1907	125,000.00	6,213.21	118,786.79
Special appropriations:								
Pomological investigations, fund from sale of fruits and vegetables	Apr. 23, 1904	33	382	1	1905	3,541.28	1,761.88	1,779.40
Agricultural experiment stations, fund from sale of card indexes	do	33	293	1	1905	65.15		65.15
Buildings, Department of Agriculture	Mar. 3, 1903	32	1139			250,000.00		
	Mar. 3, 1905	33	1211			700,000.00		
Balance available July 1, 1906						480,934.68		
Sundry civil act	June 30, 1906	34	758			300,000.00	535,594.61	245,340.07
Administration, etc., forest reserves						925,000.00	812,293.34	112,706.66
Cooperative work, forest investigations						21,410.25	16,612.05	4,798.20

For the years 1906 and 1907 the figures represent payments made to close of June 30, 1907, the accounts for those years being still open at the date of this revision.

Statement of appropriations, disbursements, and unexpended balances for the United States Department of Agriculture, etc.—Continued.

RECAPITULATION.

Fiscal year.	Amount appropriated.	Amount disbursed.	Amount unexpended.	Fiscal year.	Amount appropriated.	Amount disbursed.	Amount unexpended.
1839	$1,000.00	$1,000.00	.....	1875	$337,380.00	$321,079.83	$16,300.17
1840	.....	.....	.....	1876	249,120.00	198,843.64	50,276.36
1841	.....	.....	.....	1877	194,686.96	188,206.19	6,480.77
1842	1,000.00	1,000.00	.....	1878	198,640.00	197,634.94	1,005.06
1843	.....	.....	.....	1879	206,400.00	206,360.00	40.00
1844	2,000.00	2,000.00	.....	1880	199,500.00	198,361.72	1,138.28
1845	2,000.00	2,000.00	.....	1881	275,460.31	267,608.84	[b] 7,851.47
1846	3,000.00	3,000.00	.....	1882	363,011.05	354,482.39	[c] 8,528.66
1847	3,000.00	3,000.00	.....	1883	456,396.11	438,941.72	[d] 17,454.39
1848	4,500.00	4,500.00	.....	1884	[a] 416,641.13	413,618.09	3,023.04
1849	3,500.00	3,500.00	.....	1885	[a] 655,930.25	558,934.89	[e] 96,995.36
1850	5,500.00	5,500.00	.....	1886	[a] 677,973.22	519,196.11	158,777.11
1851	5,500.00	5,500.00	.....	1887	[a] 657,641.81	628,287.14	29,354.67
1852	5,000.00	5,000.00	.....	1888 [f]	1,027,219.06	1,011,282.62	15,936.44
1853	5,000.00	5,000.00	.....	1889	[a] 1,134,480.60	1,033,590.22	[g] 100,890.38
1854	10,000.00	10,000.00	.....	1890	[a] 1,170,139.11	971,823.62	[h] 198,315.49
1855	[a] 50,000.00	50,000.00	.....	1891	[a] 1,372,049.21	1,266,277.36	105,771.85
1856	30,000.00	30,000.00	.....	1892	[a] 2,303,655.75	2,253,262.29	50,393.46
1857	75,000.00	75,000.00	.....	1893	2,540,060.72	2,355,430.25	184,630.47
1858	63,500.00	63,157.25	$342.75	1894	2,603,855.58	1,977,469.28	[i] 626,386.30
1859	60,000.00	60,000.00	.....	1895	[i] 2,506,915.00	2,021,030.38	485,884.62
1860	40,000.00	40,000.00	.....	1896	2,584,013.22	2,094,916.42	489,096.80
1861	60,000.00	60,000.00	.....	1897	2,448,763.53	2,348,512.98	100,250.55
1862	64,000.00	63,704.21	295.79	1898	2,467,902.00	2,425,510.44	42,391.56
1863	80,000.00	80,000.00	.....	1899	2,829,702.00	2,827,795.65	28,899.27
1864	199,770.00	189,270.00	10,500.00	1900	3,006,022.00	2,947,603.42	58,418.58
1865	112,304.05	112,196.55	107.50	1901	3,304,265.97	3,239,137.39	65,128.58
1866	167,787.82	167,787.82	.....	1902	3,922,780.51	3,902,675.79	20,104.72
1867	199,100.00	199,100.00	.....	1903	5,015,846.00	4,734,230.84	281,615.16
1868	279,020.00	277,094.34	1,925.66	1904	5,025,024.01	4,969,311.64	55,712.37
1869	172,593.00	172,593.00	.....	1905	5,894,540.00	5,820,204.00	74,336.00
1870	156,440.00	151,596.93	4,843.07	1906 [j]	7,175,690.00	6,000,327.85	1,175,362.15
1871	[a] 188,180.00	186,876.81	1,303.19	1907 [j]	11,557,691.36	8,586,209.23	2,971,482.13
1872	197,070.00	195,977.25	1,092.75				
1873	202,440.00	201,321.22	1,118.78	Total	[k] 76,796,082.85	[l] 68,635,309.79	[m] 8,246,443.80
1874	257,690.00	233,765.78	23,924.22				

[a] Including deficiency appropriation.

[b] Includes $1,646.45 of the appropriation for reclamation of arid lands, carried to the fiscal year 1882.

[c] Includes $85.26 of the appropriation for reclamation of arid lands and $3,530.85 of the appropriation for experiments in the manufacture of sugar, carried to the fiscal year 1883.

[d] Includes $7,656.13 of the appropriation for reclamation of arid lands, carried to the fiscal year 1884.

[e] Includes $93,192.27 of the appropriation for Bureau of Animal Industry and $2,970.82 of the appropriation for quarantine stations, carried to the fiscal year 1886.

[f] For the fiscal year 1888, including the sum of $8,000 appropriated for deficiencies in the appropriation for experiments in the manufacture of sugar for the fiscal years 1887 and 1888, of which $7,927.50 was disbursed and $72.50 remained unexpended.

[g] Includes $12,923.25 of the appropriation for botanical investigations and $58.364.76 of the appropriation for experiments in the manufacture of sugar, carried to the fiscal year 1890.

[h] Includes $188,974.69 of the appropriation for Bureau of Animal Industry, carried to the fiscal year 1891.

[i] Includes $7,891.94 for statutory salaries of the year 1894.

[j] For the years 1906 and 1907 the figures given represent payments made to close of June 30, 1907, the accounts for those years being still open at the date of this revision.

[k] This total is the amount actually appropriated for the various fiscal years, with the exception of $37,604.70 appropriated July 13, 1868, to cover a number of expenditures made in previous years. It does not include an aggregate sum of $369,344.48 reappropriated from the unexpended balances of several fiscal years. (See foregoing notes.)

[l] Does not include $37,604.70 which was disbursed during several years, and covered by an appropriation of like amount, made July 13, 1868. (See note *k*.)

[m] Does not include an aggregate sum of $369,344.48 reappropriated from the unexpended balances of several fiscal years. (See foregoing notes.)

REPORT OF THE EDITOR.

UNITED STATES DEPARTMENT OF AGRICULTURE,
DIVISION OF PUBLICATIONS,
Washington, D. C., October 22, 1907.

SIR: I have the honor to submit herewith, for your information and consideration, a report on the work of this Division for the fiscal year ended June 30, 1907, together with certain recommendations in regard to future appropriations.

Respectfully, JOS. A. ARNOLD,
Acting Editor.

Hon. JAMES WILSON, *Secretary.*

ECONOMY IN EXPENDITURES.

The appropriation for printing for the Department of Agriculture for the year was $300,000, about two-thirds of which was expended for printing the reports, bulletins, and circulars contributed by the various Bureaus, Divisions, and Offices, and the remainder for blanks, blank books, and job work of all kinds. The demands upon the printing fund are so varied and urgent that constant vigilance in the practice of economy is necessary to make the appropriation suffice for the printing requirements of the Department. This is accomplished only by the careful editing of manuscripts submitted; the avoidance of unnecessary corrections in proof, which at one time increased by one-third the cost of the work; the condensation and arrangement of matter to be printed in the most economical and businesslike form; the elimination of unnecessary illustrations, and the restriction of editions to the actual requirements of the Department, miscellaneous applicants being referred to the Superintendent of Documents, Government Printing Office, the official designated by the law of January 12, 1895, to sell Government publications. The printing fund for the fiscal year ending June 30, 1908, is $433,750, which was estimated to cover all the printing required by the Department, including its share of the publications authorized by Congress, as well as the printing heretofore defrayed from the special funds of certain Bureaus. The estimate submitted for the fiscal year ending June 30, 1909, is $550,000, which will probably be found inadequate to the Department's requirements on account of the increased activities of the various Bureaus, Divisions, and Offices. The successful administration of such a large sum, which is enjoined upon the Chief of this Division, calls for the exercise of careful and constant attention to every detail of the work in order that the same may be promptly executed in the *most* economical manner, and, above all, that nothing

is allowed to be printed which should not have been published. The various Bureaus, Divisions, and Offices can greatly aid in facilitating the publication work by submitting perfect copy—that is, manuscript that has been read and corrected by everyone who should see it before it is transmitted for publication, leaving all the details of the printing to this Office.

It is but proper to state in this connection that in the endeavor to do our work in a businesslike manner the Public Printer is cooperating most cordially and advantageously. Full details of the publication work, including expenditures, etc., are given later on in this report.

WORK OF THE YEAR.

GENERAL SUMMARY OF RESULTS.

The increase in every branch of the work of this Division in the fiscal year 1907 exceeded that of any year in its history.

During the year 1907, 1,415 publications were issued, comprising 52,363 printed pages, of which 521 were new and 819 were reprints, 75 being published by the Weather Bureau, the total editions of all publications aggregating 16,746,910 copies. In 1906 the total number of publications issued was 1,171, comprising 51,986 printed pages, and the total number of copies 13,488,021. The increase during the year 1907, therefore, was 3,258,889 copies. The number of pages of new matter was 20,479 compared with 20,942 during the preceding year.

Over 300,000 letters were received and answered in this Division, and the distribution of documents necessitated the use of nearly 10,000,000 envelopes and the writing of more than 6,000,000 names and addresses. Our draftsmen made 1,641 drawings during the year, an increase of nearly 700. While all branches of the work show an increase, averaging about 25 per cent for this year over last, the work of the photographic studio shows a far greater increase.

It is impossible to emphasize too strongly the fact that the Chief of this Division can not control the amount of work imposed upon him. The amount of that work is simply a reflex of the growth and activity in all its branches of the Department as a whole. Indeed, all efforts to keep the publication work within reasonable limits involve extra work on the part of himself and his assistants.

A comparison of the figures in the tables forming the appendix of this report and representing the publication work of this Division with analogous figures for the year previous shows a very considerable increase in every line. To the casual observer an exception might be found to this statement in the number of pages of new matter. To any one, however, who understands the nature of our work and of an editor's duty generally, it will be readily apparent that a reduction in the number of printed pages may involve proportionately an increase rather than a decrease in the work on the part of both author and editor.

The number of requisitions issued upon the Government Printing Office in 1907 was 7,207, of which 2,762 were on the main office and 4,445 on the branch office. In 1906 the requisitions on the main

office were 1,631 and on the branch office 4,502, or a total of 6,133. These figures are exclusive of the printing done for and at the Weather Bureau.

In considering the great increase in the work performed in this Division from year to year, it is but fair to its force to call attention tc the fact that neither in number of employees nor in salaries paid has there been anything like proportionate increase. That it has been possible to effect so large an increase of work with no proportionate increase in the number of employees and the salaries paid reflects credit on the employees of this Division, to which it is not only my duty but a pleasure to call attention. This fortunate condition is due in part to the gain in experience and efficiency of the older employees and in part to the stimulus afforded by anticipations of financial recognition, long delayed, but which it is hoped are now nearer fruition. It is also due in a measure to the fact that the employees secured through the medium of the Civil Service Commission, upon whose certification all recent vacancies have been filled and additions to the force made, have been found to be in general highly efficient, whether in the grade of clerk or that of skilled laborer. It must also be stated that all have complied cheerfully when called upon for extra service, while many have sacrificed a portion of the annual leave which is theoretically supposed to be due the employees.

FARMERS' BULLETINS.

The Farmers' Bulletins continue to be the most popular publications of the Department. The total number of issues of Farmers' Bulletins printed during the year was 485, of which 42 were new, the editions being 1,100,000, and 443 were reprints, the editions of which aggregated 5,369,000, or 6,469,000 copies in all. The amount appropriated for the preparation and printing of Farmers' Bulletins remained at $98,750, the same as for the preceding year, and the quota of these bulletins allotted to each Member of Congress was also the same—10,000 copies. Under the law 80 per cent of these bulletins printed are for the use of Senators, Representatives, and Delegates, only one-fifth being reserved for the use of the Department. There is a constantly increasing demand for these publications and an increased appropriation should be provided so as to restore the Congressional allotment to 15,000 copies, at least, and to increase the number of publications placed at the disposal of the Secretary for miscellaneous distribution.

With a view to reducing the expense of the printing of Farmers' Bulletins, the following letter was addressed by the Secretary to the Chief of this Division:

DEPARTMENT OF AGRICULTURE,
OFFICE OF THE SECRETARY,
Washington, D. C., July 2, 1907.

Mr. G. W. HILL, *Editor and Chief,*
Division of Publications.

DEAR SIR: Referring to your report in reference to Farmers' Bulletins, calling my attention to the fact that we had been unable to secure an increase in the fund for that class of publications for the current fiscal year and to the unfortunate tendency to increased cost in these publications, principally owing to two causes, namely, the tendency to enlarge the size and the frequent request for the insertion of half-tone figures in the text, necessitating the use of a

higher grade of paper and considerable increase of expense in presswork, I desire to state for your guidance my personal conviction that in view of the character and purpose of these bulletins, they should be restricted in size to from 16 to 32 pages rather than as now, generally from 32 to 48 pages. I am satisfied that with particular effort on the part of the persons who write these bulletins and judicious editing of their writing, the average size can be reduced as suggested above. Moreover, where the insertion of illustrations calling for a higher grade of paper and more expensive presswork is found necessary, the reduction in size should be insisted upon as a sine qua non.

I deem it undesirable to make any further reduction in the Congressional quota, which is now only two-thirds of what it was three years ago, and it is obvious that if we are to meet the demands thus created from the fund at our disposal, the cost of producing these publications must in some way be reduced. I think it would be well for you to furnish each Bureau Chief with a copy of this letter.

Yours, respectfully, JAMES WILSON, *Secretary.*

The cost of printing Farmers' Bulletins has gradually increased during the last few years from 1¼ cents to 3 cents per copy, on account of the increased size of the bulletins and the use of illustrations requiring expensive paper. It is believed that, by limiting the size of the bulletins to from 16 to 24 pages, and the abandonment of unnecessary illustrations, especially half-tones, a reduction could be made in the cost of these bulletins of 1 to 1¼ cents a copy, which would of course permit the printing of a very much larger number from the appropriation for that purpose. In fact, with the appropriation at present available, the enforcement of the policy above laid down by the Secretary affords the only means of providing a greater number of Farmers' Bulletins to meet the increased demands for them. An examination of our records discloses the fact that very many more copies have been printed and distributed of the smaller 16-page bulletins than of the larger ones, containing 32 to 48 pages, indicating that the smaller pamphlets are more generally read.

THE SALE OF PUBLICATIONS.

Under the law of January 12, 1895, copies of every publication issued by the Department are turned over to the Superintendent of Documents, Government Printing Office, for sale. That official is also permitted, under Joint Resolution No. 11, approved March 28, 1904, to order reprints of our publications, with the approval of the Secretary of Agriculture, to supply miscellaneous demands. Last year the Superintendent of Documents sold 71,764 copies of various publications of this Department, receiving therefor the sum of $10,885.20, the number sold and the amount received far exceeding the figures for the two preceding years. The inference is clear, therefore, that there is an increased willingness on the part of the people to pay the small price affixed to our publications by the official mentioned. It is evident that the people want the publications of the Department and are willing to pay for them, and it seems quite likely that within a few years the amount received from this source will be considerable. Under the stringent regulations of the Department relative to limiting the editions of its publications and requiring the greatest possible economy in their distribution, the general printing fund is at present barely sufficient. A wider distribution would require a larger number of copies, which would necessitate an increase in the printing fund, and therefore the only alternative is to continue to refer miscellaneous applicants to the Superintendent of Documents.

COMMUNICATIONS BETWEEN THE DEPARTMENT AND THE GOVERNMENT PRINTING OFFICE.

The following letter of the Secretary to the Public Printer clearly outlines one of the important functions of this Division:

U. S. DEPARTMENT OF AGRICULTURE,
OFFICE OF THE SECRETARY,
Washington, D. C., June 3, 1907.

The PUBLIC PRINTER,
Washington, D. C.

DEAR SIR: I desire to renew my request that in the future, as in the past, no printing or binding of any kind be undertaken for this Department unless the order for the work be accompanied by a requisition duly numbered and bearing the signature of the Editor and Chief of the Division of Publications of this Department; furthermore, that you instruct your employees that all inquiries in regard to work in hand shall be made only to that Division, to which all proof shall be sent and through which it shall also be returned to your Office, and to which also all completed work shall be delivered, the Division of Publications being the only authorized medium of this Department for all communication with your Office. These instructions apply with equal force to the branch printing office, but not to the work of the Weather Bureau, which Bureau may communicate with you direct in regard to its printing and binding. In this connection I inclose herewith for your information copy of General Order No. 52, bearing on the matter, issued by me May 13, 1902, which is still in force.

Very respectfully,

JAMES WILSON,
Secretary.

REPRINT OF THE HORSE BOOK.

Another reprint of the Special Report on Diseases of the Horse was authorized by Congress March 3, 1907, when the following resolution was passed by Congress and approved by the President:

Resolved by the Senate and House of Representatives of the United States of America in Congress assembled, That there be printed and bound in cloth two hundred and fifty thousand copies of the special report on diseases of horses, with accompanying illustrations, the same to be first revised and brought to date under the supervision of the Secretary of Agriculture, one hundred and seventy-five thousand for the use of the House of Representatives, sixty thousand for the use of the Senate, and fifteen thousand for the use of the Department of Agriculture.

ESTIMATES OF COST OF PRINTING REPORTS IN RESPONSE TO INQUIRIES FROM CONGRESS.

The following extract is from Public No. 153, "An act to amend an act providing for the public printing and binding and the distribution of public documents," approved March 1, 1907:

Any Executive Department, bureau, board, or independent office of the Government submitting reports or documents in response to inquiries from Congress shall submit therewith an estimate of the probable cost of printing to the usual number. Nothing in this paragraph relating to estimates shall apply to reports or documents not exceeding fifty pages.

In order to carry out this act, the Secretary of Agriculture on March 13, 1907, issued General Order No. 108, as follows:

It is provided in the act entitled "An act to amend an act providing for the printing and binding and the distribution of public documents, approved March 1, 1907," that hereafter all reports transmitted to Congress, either in response to a special resolution or for publication under existing law, shall be accompanied by an estimate of the cost of the printing of the same. In order to carry

out the provisions of the act cited, it is hereby ordered that hereafter the manuscript of all such reports shall be submitted to the Division of Publications for revision and estimate of cost before transmission to Congress.

The following reports are authorized by the act making appropriations for the fiscal year ending June 30, 1908:

(1) A statement in detail showing the number of persons employed in the meat inspection service and the salary per diem paid to each, together with the contingent expenses of such inspectors and where they are and have been employed.

(2) The results of the examination of seeds of grass, clover, or alfalfa, procured in the open market, together with the names of the persons by whom the seeds were offered for sale.

(3) A statement showing the place, quantity, and price of seeds purchased by the Department and the date of purchase.

(4) Classified and detailed reports of all receipts for the Forest Service and classified and detailed estimates of all expenditures intended for this service for the next fiscal year, and detailed reports of all expenditures for such service during the preceding fiscal year.

(5) A report showing to what extent, if any, the work now being done by the Bureau of Biological Survey is duplicated by any other Department of the Government, and to what extent the work of this Bureau is of practical value to the agricultural interests of the country.

(6) A report showing the expenditures of the Agricultural Experiment Stations in carrying out the provisions of section 3 of the act of March 2, 1887.

(7) A report showing the appointments, promotions, or other changes made in the salaries paid from lump funds, giving in each case the title, salary, and amount of such change or changes, together with the reasons therefor.

(8) A report upon the natural conditions of the watersheds at and near the sources of the various rivers having their sources in the southern Appalachian Mountains and the White Mountains, and the price at which the same can be purchased by the Government, etc.

(9) Classified and detailed estimates of every subject of expenditures intended for the Agricultural Department for the next fiscal year, and reports of all expenditures under any appropriations for such services during the preceding fiscal year.

REDUCTIONS IN EDITIONS OF ANNUAL PUBLICATIONS OF THE DEPARTMENT.

In addition to the foregoing reports, authorization for the printing of which is contained in the act making appropriations for the Department of Agriculture for the fiscal year ending June 30, 1908, the following publications are printed annually by authority of Congress:

Annual publications of the Department of Agriculture printed by authority of Congress, with number of copies allowed the Department by Congress, and number actually printed for the use of the Department.

Publication.	Copies authorized by law.	Copies printed.
Annual Reports, Department of Agriculture	6,000	1,500
Yearbook	30,000	30,000
Report of the Bureau of Animal Industry	9,000	2,500
Report of Director of the Office of Experiment Stations	5,000	5,000
Report of Field Operations of the Bureau of Soils	6,000	1,000
Report of the Weather Bureau	1,000	1,000
Expenditures of the Department of Agriculture	1,500	75
Progress of Beet-sugar Industry in the United States	8,000	5,000
Expenditures of the Bureau of Animal Industry	1,500	25

The above statement shows the number of copies authorized by law for the use of the Department and the number of copies actually ordered by the Department under the provisions of public resolution

No. 14, joint resolution to prevent unnecessary printing and binding and to correct evils in the present method of distribution of public documents, approved March 30, 1906. It will be seen that a reduction of 21,900 copies has been effected, with a saving of at least $15,000, by ordering only the number actually needed.

THE EDITORIAL SECTION.

The editorial work of the Division was conducted, under the immediate direction of the Secretary, along the same careful and conservative lines as heretofore.

A new feature of the Division's work during the past year is the sending out of notices on the submission of a manuscript for publication, a system whereby all Chiefs of Bureaus and Offices are promptly notified of the proposed publication and given a general idea of its character. If any Chief to whom such notice is sent desires to examine the manuscript, the opportunity is afforded to him to do so. In cases where lines of separation between spheres of work or investigation appear to have been overstepped, the matter is usually adjusted without difficulty by this Division.

This feature of the editorial work usually involves consultations with authors of manuscripts and with Chiefs of Bureaus in which the manuscripts originate. Such consultations are usually intrusted to the Associate Editor. This officer is thus required to spend a large part of his time in bringing into harmony the conflicting views which frequently arise and in consultations regarding manuscripts, proofs, and illustrations. Fixed policies of the Department must, of course, be observed, but the views of the author, who is presumed to know best the requirements of his subject and his readers, must have full weight. These consultations require the exercise of tact and good judgment on the part of the Associate Editor. He also pays frequent visits to the Government Printing Office to inspect the character of maps and other colored illustrations prepared for use in the Department publications, and to assist in resolving questions and difficulties which arise in connection with the printing of these publications. It is proper to say that the Associate Editor has performed these difficult tasks in a most satisfactory manner. He also keeps a record of every publication from the time the manuscript is submitted till the finished work is received from the Printing Office. The importance of having such a carefully kept record has been repeatedly demonstrated.

During the past fiscal year, the new publications receiving editorial attention have contained an aggregate of 20,479 printed pages. The editorial work on these publications involved the reading, revision, and preparation of about 36,000 pages of manuscript (mostly typewritten), the reading and revision of 10,000 galleys of proof, and the revision of over 40,000 pages of first and second page proofs.

In addition to all this, the job work done at the branch printing office was revised and the proof read in this Division. As the number of jobs to receive attention during the fiscal year was 4,445, it will be seen that this work is not an item of minor importance.

Attention should be called to the two general classes into which, so far as editorial work is concerned, the publications of the Depart-

ment may be divided: (1) Those which belong distinctly to the several Bureaus and Offices, as bulletins, circulars, reports, field programmes, etc., and (2) the general publications of the Department, as the Yearbook, the Report of the Secretary, the Annual Reports of the Department, the reports and circulars of the Secretary's Office, the publications of this Division, and the Farmers' Bulletins.

As regards the publications of the first class, the editorial work is more or less divided between the force of this Division and that of the different bureaus. All these publications, however, receive careful editorial attention in the Division of Publications.

As regards the general Department publications, as the Yearbook, the Annual Reports of the Department, and the publications of the Secretary's Office, practically all the editorial work is done in the Division of Publications. In fact, the work on these publications, together with the publications of this Division, takes up a large part of the time of the editorial force. Two of these publications—the Yearbook and the Annual Reports—are among the largest and most important issued by the Department.

The volume of editorial work involved in handling the publications of this class may be judged from the following statistics of the work done during the past fiscal year:

The eleven publications of the Secretary's Office contained an aggregate of 1,835 printed pages; three reports required by law to be made to Congress (S. Doc. 398, H. Doc. 326, and the expenditures of the Department) contained in all 734 pages; the Division of Publications issued 33 publications (including the Monthly Lists) which contained 622 pages—a grand total of 3,191 pages. The editorial work on these publications involved the handling and preparation of 5,280 pages of manuscript (mostly typewritten), the reading and revision of 1,600 galleys of proof, and the revision of more than 10,000 pages of first and second page proofs.

The Farmers' Bulletins also belong among the general Department publications. While considerable editorial work is done on many of these bulletins in the Bureaus and Offices whence they originate, they are not considered strictly bureau publications, and editorial responsibility for them rests in the Division of Publications, where they are revised with particular care on account of their popular character. During 1907, 42 of these bulletins were issued, containing a total of 1,300 printed pages. The editorial work on these involved the reading and preparation of 2,300 pages of manuscript, the reading and correction of 650 galleys of proof, and the revision of 2,600 pages of first and second page proofs.

It need hardly be said that editorial duties such as are briefly described consume much time, involve a large amount of careful work, and require much patience and perseverance on the part of the editorial force.

THE DOCUMENT SECTION.

The publications of the Department would be of little value if they were not promptly and discreetly distributed to the people. This work devolves upon the document section, which is about *the busiest* place in the Department, and it is believed that the work

is very satisfactorily performed, considering the inadequate force employed. The estimates for the year ending June 30, 1909, provide for an increase in the force required to handle and mail the documents, and in the meantime the work will of necessity be performed with great difficulty and unavoidable delay.

The organization of the document section as to system, equipment, and force there employed has undergone but few changes since the report for the year ending June 30, 1906.

There have been received from the Government Printing Office during the year covered by this report 16,437,856 copies of reports, bulletins, circulars, and other publications, and as there were on hand at the close of business June 30, 1906, 1,642,229 documents, a total of over 18,000,000 public documents were handled by the force of this office. Of these, 15,341,163 were distributed, leaving on hand at the close of the fiscal year 2,738,922 documents. The number of Farmers' Bulletins included in this distribution amounted to 5,817,425, and the publications other than Farmers' Bulletins to 9,523,738. Twenty-three thousand nine hundred and forty-eight large mail sacks were used in this distribution, and there were consumed 9,800,000 envelopes.

WEIGHING THE MAIL.

During the first half of the fiscal year the Department was required to weigh the mail forwarded through the post-office under penalty franks, and the record shows that during that period 3,698,725 packages, weighing 622,988 pounds, which would require at ordinary postage rates $66,450 to provide stamps, were delivered to the city post-office. An accurate account of the entire year's distribution can not be found by doubling these figures, as the demand for the Department's publications during the last half of the calendar year is not so great as during the winter and spring months; therefore, it is a fair estimate that the weight of the domestic mail originating in the document section would exceed 1,500,000 pounds. In addition to the above there were mailed to foreign countries, postage prepaid, 44,426 packages, weighing 14,426¾ pounds, at a total expense for postage of $1,474.98; and 134 packages, weighing 508¼ pounds, were forwarded through the Bureau of International Exchange, Smithsonian Institution, as the weight of each package was in excess of the limitation imposed by the foreign countries to which they were mailed. Furthermore, there were forwarded to the Dominion of Canada, México, and Cuba, under frank, 15,909 packages, weighing 3,972 pounds.

WORK INVOLVED IN MAILING PUBLICATIONS.

These publications of the Department were forwarded in compliance with the requests in over 300,000 letters and postal cards which reached the document section for attention, and in compliance with requests from the Chiefs of Bureaus and Divisions of the Department to mail their publications to the persons and institutions on the lists maintained for that purpose. Each request received in the document section was acknowledged by a prompt, and, in many cases, a full reply, either announcing the forwarding of the documents or expressing regret at the inability of the Department to do so and explaining

the reason why they could not be provided. Of these replies 30,530 were of a character requiring especial attention, either because of the person to whom they were addressed or the information which was to be conveyed. The other replies were made by means of blank forms and postal cards used to notify the maker of the request as to the Department's action concerning the same.

FORWARDING PUBLICATIONS BY REGISTERED MAIL.

Such publications of the Department as the Yearbooks, the Annual Reports, Special Report on Diseases of the Horse, and Special Report on the Diseases of Cattle, were forwarded by registered mail, and of these over 40,000 passed through the registry division f the city post-office. This system, inaugurated several years ago, has worked very satisfactorily in assuring the delivery of the valuable reports to the persons for whom they were intended or their return to this Department for use in supplying other applicants.

RECORDS OF DISTRIBUTION OF DOCUMENTS.

These fifteen and a half million documents are not sent out indiscriminately nor without proper record of their distribution. An account was kept with the Public Printer for each and every separate bulletin and publication and a receipt was given for each delivery. An account is kept with the stock room for each publication, and no document is mailed without an order from the Chief of the Division. These orders are entered under the card system of bookkeeping, and a statement of each document on hand at the close of the day's business is always available. The orders are then filed away and form part of the records of the daily transactions of the document section.

This, however, is but a small part of the clerical work attending the activities of the document section. Over 5,000,000 addressed franks or envelopes were prepared for mailing the Monthly Lists and Crop Reporters, and as it has been the experience in this office that for each request received the address of the writer is transcribed at least five times, at least 1,500,000 other franks or entries were required in disposing of the letters and cards previously mentioned.

INCREASED FORCE REQUIRED.

The enormous growth of the Department of Agriculture and the great increase in the appropriation for its activities have greatly increased the labor of the document section, through which all of the Department's printed matter passes to the world at large; therefore, when the same force is called upon to conduct the distribution of nearly 15,500,000, which force was deemed not more than sufficient when a much smaller number were the output of a year, it must necessarily occur that either the employees are overworked or the office falls behind and the work accumulates. While acknowledging that at many times during the year the demand upon the document section has been such as to require strenuous efforts and even extended hours of labor, there has been no time when there was a serious accumulation of either unanswered letters or undelivered documents.

SECTION OF ILLUSTRATIONS.

The subject of illustrations in Government publications has recently received a good deal of attention, and in no other Department has it been more carefully considered than here. Under the order of the Secretary the number permitted in our publications has been greatly reduced, and the effort is made to have those which are used to be of the highest order consistent with economy. This office is equipped to provide all photographs, drawings, etc., that may be required, and it is gratifying to state that most of the Bureaus, Divisions, and Offices are availing themselves of our expert assistance in such work.

The past year has demonstrated more than ever before the importance and the necessity of assistants of a high order of skill and experience, both in drafting and in photographic work. During the fiscal year ending June 30, 1907, the draftsmen in this section prepared and made 1,641 drawings, an increase of 687 drawings over last year. A great amount of this work was of the most exacting character. All the working plans to install the food inspection laboratories over the United States for the Bureau of Chemistry were prepared by this section. With but four draftsmen the amount of work accomplished is indeed most commendable; they, as well as the assistant photographers, surely reached the limit of their capacity this year. It is obviously necessary to increase the force of draftsmen to meet this increasing demand for their services and the great increase of work.

If the work increases in the same ratio as in the fiscal year just ended—and there is no reason to believe it will not—without more draftsmen and photographers it is believed that the present force, with the present quarters, will not be able to handle it and keep it up to date.

What is said of the draftsmen is accentuated in the photographic work. The increase in this work is simply beyond our ability to perform with the small force employed. The Bureaus and Divisions in the Department are more and more availing themselves of the central studio in this Division. This turning over of the work to this Division is due not only to lack of equipment in their offices but to the uniformity and high quality of work done in this section. This statement is justified on account of the commendation and encouragement received from the different offices for the photographic work done. Field photography has been done this year for the Bureau of Animal Industry in Virginia and at the Experiment Station at Bethesda, Md.; for the Bureau of Entomology at the Arlington Experiment Farm; and for the Bureau of Plant Industry in Connecticut and Maryland. Unfortunately, it is impossible to comply with all the requests for this character of work, but we are responding as far as our facilities and force will permit.

Between 2,000 and 3,000 negatives have been added to our files this year. There is a growing disposition on the part of some of the offices to file their negatives in this section, and it is recommended that this practice be encouraged as far as our present quarters will permit, as this greatly facilitates our work, because it reduces the risk of breakage to the minimum. It sometimes happens in trans-

mission to this office that negatives are broken, owing to careless handling by inexperienced persons. There are now filed in this office the negatives covering tobacco investigations for the Bureau of Plant Industry; Irrigation and Drainage, Agricultural Education, and Farmers' Institute Lectures, under Office of Experiment Stations; and work of the Bureau of Entomology and Bureau of Animal Industry, besides the negatives belonging to this Division.

The quarters assigned to this section at present are not only ill adapted, but are altogether too restricted. These rooms are located in the attic of the main building, directly under the roof, and during the summer months we are often compelled to stop work owing to the extremely high temperature, which causes the emulsion on the plates and films to soften and thereby become worthless. While this condition makes the work during the summer months exceedingly onerous, the vital question is to get more space assigned to this section in the near future. It will be impossible to continue to handle the photographic work this year in the present quarters, with the probabilities of a considerable increase over the fiscal year ending June 30, 1907. Additional room will enable us to meet the increasing demand for our services, will facilitate our work, and is strictly in the interest of efficiency and economy.

The following is a detailed statement of the work done by this section:

PHOTOGRAPHIC WORK.

Negatives made	1,551
Films and negatives developed	2,556
Velox prints made	18,687
Albuma prints	3,284
Lantern slides made	1,336
Bromide enlargements	481
Prints mounted	500
Reproduction prints for pen drawings	149
Blocking and retouching negatives	200
Platinum prints	12
Blueprints	3,893
Black prints	183
Prints colored	110
Lantern slides colored	15

DRAWINGS, ELECTROTYPES, ETC.

Drawings made	1,641
Requests received for duplicate electros	198
Duplicate electros furnished to correspondents on request	2,390
Illustrations printed or published, not including reprints	1,541

THE SALE OF PHOTOGRAPHIC PRINTS AND LANTERN SLIDES.

The number of photographic prints and lantern slides furnished to miscellaneous applicants during the year was 86, and the amount received therefor under a provision in the the act making appropriations for this Department for the fiscal year ending June 30, 1907, was $475.09. There is every prospect that the sales of prints and lantern slides will increase. If the amount received in payment for such work were not turned into the Treasury, as at present required by law, but made available for the purchase of materials from time to time, this branch of our work would be greatly facilitated, inasmuch as the special fund of the Division is often taxed to its utmost and will sometimes not permit of the purchase of materials to fill

a large order for lantern slides or bromide enlargements, money for which is furnished by the applicant.

INDEXING SECTION.

The indexing section is prepared to make indexes to the Yearbook, the annual reports, and all such reports and bulletins as require them. In fact, every publication of more than 30 pages should have an index to assist the average reader as well as the scientist in finding what he wants. During the past year indexes have been prepared for several important bulletins.

The activities of this branch have included during the year past the making of indexes, writing and copying of cards for extending and keeping up to date the two card indexes which it maintains, the revision of two circulars and one bulletin, the compilation of the Monthly List of Publications, the compilation of matter for the Yearbook Appendix, and Circular 4 of this Division—the Farmers' Bulletin Subject Index—besides considerable miscellaneous work.

There has been a development of the work along lines essential to its effectiveness, so that additional help must be provided as soon as suitable quarters can be found. Otherwise this service will be seriously crippled.

One new feature of the addition to the work is the care of the books for binding for permanent preservation and the preparing of them for the bindery. Space ought to be provided for the proper storing of these books pending the time for their collection and binding; also for the shelving of at least one copy to make it available for consultation by the indexers of the section. Without a full set of Department publications within easy reach the indexers are obliged at times to work in uncertainty. This means insufficient indexing, by which students and the public generally will be misled, and applicants for printed information about farming will fail to receive the Department books in stock awaiting calls for them.

The most important book indexes made have been for the Farmers' Bulletins. These included, besides those for the bound volumes of 25 numbers each, an index for the first 250 of these bulletins, a book of 148 pages now in press. For this 8,394 cards were written and compared, an amount of work which will be readily comprehended only by persons engaged in work of this kind.

The lists of publications for free distribution and for sale, Circulars 2 and 3, were twice revised, and the revision of the Historical Sketch of the Department of Agriculture, with the addition of 25 per cent of new matter, was completed and the book published.

A change in the character of the Monthly List was inaugurated July 1, 1907, so that instead of being, as heretofore, a complete record of the publication work of the Department, it is a list of recent documents available for distribution and sale. This change requires rather more work in the preparation of copy, but it increases notably the usefulness of the list to nearly a quarter of a million persons who receive it.

The maintenance of the two card indexes, for which this office was originally set apart, has been continued by the writing of cards,

10,000 to 15,000 in all, for all new publications as they come out and making from one to four copies of each card as written; but it has been found impracticable with the force available to do any work during the year on the publications prior to 1905. Some important additions were made to the index of publications available for free distribution and for sale, and it was gone over completely at the close of the fiscal year so as to bring it into use more expeditiously and fully in supplying applicants with publications and information in cases where the request does not state the serial number of the book desired, but merely the subject in which the applicant is interested. Often the language of these requests is vague or misleading; and even when not so only a good index kept absolutely up to date will enable this office to meet adequately the needs of persons throughout the country interested in agriculture. It is manifestly impossible for any one to remember the publications and passages in publications on all subjects treated by the Department in its thousands of books. The attempt to do so involves the loss to the applicant on many occasions of the most important printed information in the possession of the Department.

BRANCH PRINTING OFFICE.

The following is a condensed statement of the work done in the branch printing office during the last fiscal year:

Printing done at the branch office.

Envelopes	1,907,611	Franks	517,150
Letter heads and note heads	1,364,872	Lists	200,714
Cards	3,653,328	Circular letters	298,385
Circulars (document)	1,449,318	Miscellaneous	4,012,351
Blanks	7,379,761	Total	21,541,216
Labels	757,726		

Number of requisitions in 1906	4,502
Number of pieces of work in 1906	22,754,912
Number of requisitions in 1907	4,445
Number of pieces of work in 1907	21,541,216

For nearly seven months (November 15, 1906, to June 8, 1907) the capacity of the printing office was reduced about one-third, which accounts for the fact that the amount of work done is not quite as large as that in the preceding fiscal year. This reduction was in the nature of an experiment and at the request of the Joint Committee on Printing. It was found, however, that much of the work which was thus diverted to the main office could not be done as expeditiously there as at the branch office, with the result that this office was vested with the discretion of dividing the work between the two offices according to its own judgment as to which office could most promptly and economically execute the work. The Joint Printing Committee is still examining into the general subject of the necessity for the continuance of the various branch printing offices with the view to reporting what economies, if any, would be effected by the abolition of these branch offices and the execution of the work now performed therein at the Government Printing Office. This Division still adheres to the opinion that the Department of Agriculture is

obliged to have a branch printing office for the expeditious printing of its numerous emergency circulars, decisions, regulations, blanks, letter heads, envelopes, etc. It is not intended to unnecessarily increase the work of the branch office, but to utilize it for emergency printing, which it does promptly and satisfactorily. It is hoped that the committee having the matter under investigation will become convinced, after the investigations that have been going on during the last year, that the branch office is a necessary adjunct and that its abolition would be a calamity to the Department.

RECOMMENDATIONS.

BUREAU ORGANIZATION.

The recommendation that the Division of Publications be recognized as a Bureau is respectfully renewed. As a matter of fact, it is already so organized and conducted, and needs only to be so designated by law, with provision for the payment of adequate salaries to the officials supervising and directing the various branches of the work.

The chief reasons that justify the increase of appropriations asked for the use of the Division of Publications in the adoption of the Bureau organization are the following:

The growth of the Division and the increase of its work have been, like that of the Department itself, phenomenal, nor is it ever possible to restrict this growth, so long as the growth of the Department continues, inasmuch as the work of the Publications Division is a reflection of the work of the whole Department. The number of persons now employed in the Division, according to the statement of the Appointment Clerk, is 180. The appropriations for the Division for the current fiscal year, including the general printing fund, aggregate $600,000—a sum which will have to be increased for next year to three-quarters of a million to efficiently perform the work, the needed increase for next year being about the same as the increase of this year over last.

The bulk of the increase on the statutory roll consists of increases for the force of clerks and skilled laborers, brought under the classified service in 1905, in order to bring them up, approximately at least, to the plane of remuneration allowed the employees in other branches of the Department for like work. Ever since this force was brought into the classified service and placed on the statutory roll, instead of being paid as theretofore from a lump appropriation, the great majority of the clerks employed have continued to draw the wages of laborers, and many of our experienced and capable laborers have been drawing the pay of unskilled labor.

The general attitude of Congress, as manifested in the last session, seems to be favorable to a more liberal treatment of the clerical and skilled labor force. Moreover, the likelihood of the presentation of the Report of the Keep Commission, with the President's indorsement, encourages the hope that recognition will be given during the next session. Another consideration attendant upon this report is that unless the Bureau organization is effected now it may be post-

poned for some time, with the result that competent gentlemen who are practically filling places of chiefs of division, and the chief clerk of this Division, will be rated as senior clerks, in which class the maximum salary is $2,100 per annum, a condition of things which would be grievously unjust to a most experienced, competent, and faithful set of men.

ADDITIONAL ROOM.

The need of additional room is emphasized with the continued increase in the work of this Division. It is earnestly recommended that one additional room be secured for the use of the editorial section and one for the indexing section, adjoining, if possible, the quarters now occupied in the main building. It is hoped that this arrangement can be made after the removal of certain Bureaus to the new building. Provision should also be made for enlarging the quarters occupied by the illustration section so as to include the entire top floor of the main building.

STATISTICS OF THE PUBLICATION WORK.

The details of the publication work of the Department, including the appropriations made and the expenditures during the year, are given in the tables which follow:

Number and classes of publications issued during the fiscal year 1907.

Publications:	
Chargeable to regular printing fund	776
Chargeable to divisional funds	27
Chargeable to Farmers' Bulletin fund	485
Printed as Executive documents	53
Edited at Weather Bureau	74
Total	1,415

Number of publications, original and reprint, and number of pages and copies of each class, fiscal years 1904–1907.

Character of publications.	1904			1905		
	Number of publications.	Pages.	Copies.	Number of publications.	Pages.	Copies.
Original	379	21,647	5,470,236	391	13,988	5,838,672
Reprints	514	15,018	6,076,300	596	24,825	5,758,000
Weather Bureau	79	1,241	839,850	85	1,514	878,485
Total	972	37,906	12,386,386	1,072	45,327	12,475,157

Character of publications.	1906			1907		
	Number of publications.	Pages.	Copies.	Number of publications.	Pages.	Copies.
Original	414	20,942	6,423,400	521	20,479	9,226,000
Reprints	654	29,491	6,134,000	819	30,422	6,786,000
Weather Bureau	103	1,553	930,621	75	1,462	734,910
Total	1,171	51,986	13,488,021	1,415	52,363	16,746,910

Number of publications issued (including reprints) during eleven years, 1898 to 1907, inclusive.

Year.	Number of publications.	Total number of copies.	Year.	Number of publications.	Total number of copies.
1897	424	6,541,200	1904	972	12,421,386
1898	501	6,280,365	1905	1,072	12,342,907
1899	603	7,075,975	1906	1,171	13,483,021
1900	468	7,152,428	1907	1,415	16,743,910
1901	606	7,899,281			
1902	757	10,586,580	Total	8,927	112,230,617
1903	938	11,698,564			

Number of publications (original and reprint) and number of copies and pages, by Bureaus, Divisions, and Offices, fiscal year 1907.

Bureau, division, or office.	Publications.			Pages.			Number of copies.		
	Original.	Reprints.	Total.	Original.	Reprints.	Total.	Original.	Reprints.	Total.
Secretary's Office	10	7	17	439	223	662	125,300	61,000	186,300
Congressional documents	51	2	53	4,495	207	4,702	676,575	9,500	686,075
Accounts and Disbursements	2	------	2	330	------	330	175	------	175
Animal Industry	50	95	145	1,738	3,095	4,833	230,400	973,100	1,203,500
Biological Survey	14	21	35	347	677	1,024	413,500	133,200	546,700
Chemistry	22	34	56	1,264	807	2,071	77,600	180,150	257,750
Entomology	57	84	141	1,556	1,440	2,996	212,500	303,400	515,900
Experiment Stations	91	271	362	4,913	16,587	21,500	554,200	1,849,500	2,403,700
Forest Service	55	105	160	1,021	1,984	3,005	1,612,500	1,049,200	2,661,700
Library	5	------	5	253	------	253	4,300	------	4,300
Plant Industry	51	144	195	1,593	3,705	5,298	582,950	1,705,050	2,288,000
Publications	34	13	47	698	512	1,210	2,659,500	165,000	2,824,500
Public Roads	42	20	62	253	515	768	397,500	183,500	581,000
Soils	11	18	29	627	534	1,161	51,500	154,100	205,600
Statistics	25	2	27	866	96	962	1,627,750	2,800	1,630,550
Weather Bureau	75	4	79	1,462	126	1,588	734,660	16,500	751,160
Total	595	820	1,415	21,855	30,508	52,363	9,960,910	6,886,000	16,746,910

Amount expended for the various Bureaus, Divisions, and Offices for printing and binding, 1907.

Division of Accounts and Disbursements	$3,162.30
Bureau of Animal Industry	18,995.87
Bureau of Biological Survey	3,176.91
Bureau of Chemistry	6,602.43
Bureau of Entomology	6,772.40
Office of Experiment Stations	28,075.92
Forest Service	21,377.53
Library	6,232.36
Bureau of Plant Industry	10,599.97
Division of Publications	8,060.43
Office of Public Roads	3,424.51
Bureau of Soils	3,877.10
Bureau of Statistics	20,412.54
Secretary's office	6,634.41
Printing at branch printing office for the various Bureaus, Divisions, and Offices	29,891.00
Congressional	39,532.71
Total	218,828.39

Farmers' Bulletins issued, 1900–1907.

Year and class.	Number of bulletins.	Number of copies.	Year and class.	Number of bulletins.	Number of copies.
Fiscal year 1907:			Fiscal year 1903:		
Originals	42	1,100,000	Originals	22	725,000
Reprints	443	5,369,000	Reprints	301	5,877,000
Total	485	6,469,000	Total	323	6,602,000
Fiscal year 1906:			Fiscal year 1902:		
Originals	33	875,000	Originals	23	575,000
Reprints	404	5,693,000	Reprints	236	5,575,000
Total	437	6,568,000	Total	259	6,150,000
Fiscal year 1905:			Fiscal year 1901:		
Originals	24	630,000	Originals	14	415,000
Reprints	363	5,295,500	Reprints	157	2,930,000
Total	387	5,925,500	Total	171	3,345,000
Fiscal year 1904:			Fiscal year 1900:		
Originals	25	775,000	Originals	18	525,000
Reprints	390	5,660,000	Reprints	90	1,835,000
Total	415	6,435,000	Total	108	2,360,000

Cost of printing Farmers' Bulletins, 1900–1907.

Fiscal year—	Paid from—	Number of bulletins.	Number of copies.	Cost.
1907	Farmers' Bulletin fund	485	6,469,000	$98,601.17
1906	do	437	6,568,000	98,601.49
1905	do	388	5,925,500	103,802.53
1904	do	415	6,435,000	104,787.68
1903	do	323	6,602,000	95,534.18
1902	do	259	6,150,000	107,363.05
1901	do	171	3,345,000	51,796.68
	General printing fund	97	2,150,000	30,665.15
1900	do	11	210,000	3,469.69
	Total	108	2,360,000	34,134.84

New Farmers' Bulletins issued during the fiscal year 1907.

No. of bulletin.	Title of bulletin.	Total number of copies.
260	Seed of Red Clover and its Impurities	20,000
261	The Cattle Tick	30,000
262	Experiment Station Work—XXXVI	30,000
263	Practical Information for Beginners in Irrigation	20,000
264	The Brown-tail Moth and How to Control It	15,000
265	Game Laws for 1906	30,000
266	Management of Soils to Conserve Moisture	30,000
267	Experiment Station Work—XXXVII	30,000
268	Industrial Alcohol: Sources and Manufacture	20,000
269	Industrial Alcohol: Uses and Statistics	20,000
270	Modern Conveniences for the Farm Home	30,000
271	Forage Crop Practises in Western Oregon and Western Washington	20,000
272	A Successful Hog and Seed-corn Farm	30,000
273	Experiment Station Work—XXXVIII	30,000
274	Flax Culture	30,000
275	The Gipsy Moth and How to Control It	30,000
276	Experiment Station Work—XXXIX	30,000
277	The Use of Alcohol and Gasoline in Farm Engines	30,000
278	Leguminous Crops for Green Manuring	30,000
279	A Method of Eradicating Johnson Grass	10,000
280	A Profitable Tenant Dairy Farm	30,000
281	Experiment Station Work—XL	30,000
282	Celery	30,000
283	Spraying for Apple Diseases and the Codling Moth in the Ozarks	20,000
284	Insect and Fungous Enemies of the Grape East of the Rocky Mountains	30,000

New Farmers' Bulletins issued during the fiscal year 1907—Continued.

No. of bulletin.	Title of bulletin.	Total number of copies.
285	The Advantage of Planting Heavy Cotton Seed	65,000
286	Comparative Value of Whole Cotton Seed and Cotton-seed Meal in Fertilizing Cotton	65,000
287	Poultry Management	30,000
288	Nonsaccharine Sorghums	30,000
289	Beans	30,000
290	The Cotton Bollworm	30,000
291	Evaporation of Apples	30,000
292	Cost of Filling Silos	15,000
293	Use of Fruit as Food	15,000
294	Farm Practice in the Columbia Basin Uplands	10,000
295	Potatoes and Other Root Crops as Food	15,000
296	Experiment Station Work—XLI	20,000
297	Method of Destroying Rats	30,000
298	Food Value of Corn and Corn Products	15,000
299	Diversified Farming Under the Plantation System	15,000
300	Some Important Grasses and Forage Plants for the Gulf Coast Region	10,000
301	Home-Grown Tea	20,000
	Total	1,100,000

Farmers' Bulletins contributed by Bureaus, Divisions, and Offices, 1907.

Bureau, Division, and Office.	New.	Reprints.	Number of copies.
Bureau of Animal Industry	2	68	960,000
Bureau of Biological Survey	2	5	110,000
Bureau of Chemistry	2	14	205,000
Bureau of Entomology	4	31	320,000
Office of Experiment Stations	12	150	2,075,000
Forest Service		10	95,000
Bureau of Plant Industry	19	127	2,204,000
Division of Publications		12	145,000
Office of Public Roads		12	165,000
Bureau of Soils	1	11	175,000
Weather Bureau		3	15,000
Total	42	443	6,469,000

Number of copies of Farmers' Bulletins issued (Nos. 1 to 301) and number distributed to Members of Congress, 1894–1907.

Date.	Total number of copies issued.	Congressional distribution.	Date.	Total number of copies issued.	Congressional distribution.
Prior to 1894	540,000		1902	6,150,000	4,289,126
1894	278,500		1903	6,602,000	3,954,976
1895	1,567,000	885,770	1904	6,435,000	4,895,556
1896	1,891,000	1,316,695	1905	5,925,500	4,782,643
1897	2,387,000	1,967,237	1906	6,568,000	5,279,476
1898	2,170,000	1,580,065	1907	6,469,000	3,484,713
1899	2,437,000	1,101,985			
1900	2,360,000	1,666,909	Total	55,125,000	37,400,161
1901	3,345,000	2,195,010			

New Farmers' Bulletins issued each year from 1895 to 1907, inclusive.

Year.	Number of bulletins.	Year.	Number of bulletins.
1895	11	1903	22
1896	13	1904	25
1897	16	1905	24
1898	21	1906	33
1899	22	1907	42
1900	18		
1901	14	Total	284
1902	23		

Appropriations for the fiscal years 1904–1908.

Appropriation.	1904	1905	1906	1907	1908
Statutory roll	$29,320	$30,640	$114,370	$116,270	$126,550
General printing fund	[a] 160,000	[a] 160,000	[a] 160,000	[a] 275,000	[a] 408,750
Preparation, printing, and distribution of Farmers' Bulletins	105,000	105,000	98,750	98,750	([b])
Additional assistants, artists, draftsmen, etc.	10,000	15,000	3,500	3,500	[c] 35,000
Labor, material, wagons, horses, rent of building, etc.	85,000	90,000	30,000	30,000	
Total	389,320	400,640	406,620	523,520	570,300

[a] Exclusive of $25,000 for Weather Bureau.
[b] Included in general printing fund.
[c] Additional assistants and Labor and Material appropriations combined under title "Publications, Department of Agriculture."

Expenditures under general appropriations for fiscal year ended June 30, 1907.

General printing fund	$216,828.39
Preparation and printing of Farmers' Bulletins	98,601.17
Additional assistants, artists, draftsmen, etc	3,387.46
Labor, material, etc	29,836.04
Total	348,653.06

Expenditures for printing and binding, total and by funds, 1907.

TOTAL EXPENDITURES.

Divisional publications paid from general fund	$131,316.47
Divisional publications paid from special funds	25,599.39
Blank books, blank forms, etc., paid from general fund	55,620.92
Blank forms, etc., paid from special fund	21,808.98
Branch office (all work) paid from general fund	29,891.00
Farmers' Bulletins paid from Farmers' Bulletin fund	98,601.17
Total	362,837.93

EXPENDITURES BY FUNDS.

General printing fund ($275,000, exclusive of $25,000 for Weather Bureau):	
Expended for the various Bureaus, Divisions, and Offices	$186,937.39
Expended for printing at branch office for the various Bureaus, Divisions, and Offices	29,891.00
	216,828.39
Farmers' Bulletin fund	98,601.17
Divisional funds—	
Bureau of Animal Industry	2,285.90
Office of Experiment Stations	7,264.98
Forest Service	36,438.36
Library	888.90
Bureau of Statistics	530.23
Total	362,837.93

Requisitions on the branch printing office by Bureaus, Divisions, Offices, etc., 1907.

Secretary's office	382
Division of Accounts and Disbursements	141
Bureau of Animal Industry	583
Bureau of Biological Survey	110
Bureau of Chemistry	226
Bureau of Entomology	177
Office of Experiment Stations	304

Forest Service	464
Library	47
Bureau of Plant Industry	1,150
Division of Publications	199
Office of Public Roads	66
Bureau of Soils	66
Bureau of Statistics	520
Total	4,445

Publications printed in the branch printing office, 1907.

Bureau, Division, and Office.	Requisitions.	Number of copies printed.
Secretary's Office	5	16,000
Bureau of Animal Industry	10	32,000
Bureau of Biological Survey	6	17,000
Bureau of Chemistry	2	2,750
Bureau of Entomology	23	55,300
Office of Experiment Stations	5	26,750
Forest Service	14	73,500
Bureau of Plant Industry	13	99,000
Division of Publications	9	836,000
Total		1,158,250

Requisitions on the main printing office by Bureaus, Divisions, and Offices.

Secretary's Office	50
Division of Accounts and Disbursements	68
Bureau of Animal Industry	578
Bureau of Biological Survey	47
Bureau of Chemistry	90
Bureau of Entomology	123
Office of Experiment Stations	380
Forest Service	536
Library	44
Bureau of Plant Industry	453
Division of Publications	92
Office of Public Roads	75
Bureau of Soils	86
Bureau of Statistics	115
Miscellaneous	20
Weather Bureau	3
	2,760

APPENDIX A.

PUBLICATIONS ISSUED DURING THE YEAR ENDED JUNE 30, 1907.

[The following is a list of the publications issued during the fiscal year 1907, together with the number of copies ordered printed. Farmers' Bulletins are for free distribution by Members of Congress and also by the Secretary of Agriculture. Other publications for which no price is named are for free distribution by the Secretary of Agriculture, provided copies are available. All publications to which a price is affixed (including those of the Weather Bureau) are for sale by the Superintendent of Documents, Government Printing Office, to whom all copies not needed for official use are turned over in compliance with the law. To him all orders for such publications should be sent and not to the Department of Agriculture. Remittances may be made by postal money order. Do not send stamps.]

CONGRESSIONAL.

	Copies.
Advance Sheets, Field Operations of the Bureau of Soils, 1904:	
Soil Survey of the Orangeburg Area, South Carolina. By Frank Bennett and A. M. Griffen. Pp. 25, fig. 1, map 1. July 9, 1906	4,000
Soil Survey of the Bear River Area, Utah. By Charles A. Jensen and A. T. Strahorn. Pp. 33, fig. 1, maps 3. July 24, 1906	4,000
Soil Survey of the Greeley Area, Colorado. By J. Garnett Holmes and N. P. Neill. Pp. 47, fig. 1, map 1. August 2, 1906	4,000
Soil Survey of the Sacramento Area, California. By Macy J. Lapham, Aldert S. Root, and W. W. Mackie. Pp. 43, fig. 1, map 1. August 2, 1906	6,000
Soil Survey of Tompkins County, New York. By Jay A. Bonsteel, Elmer O. Fippin, and William T. Carter, jr. Pp. 36, fig. 1, map 1. March 11, 1907	4,000
Advance Sheets, Field Operations of the Bureau of Soils, 1905:	
Soil Survey of the Carlton Area, Minnesota-Wisconsin. By W. J. Geib and Grove B. Jones. Pp. 25, fig. 1, map 1. July 11, 1906	7,000
Soil Survey of Leon County, Florida. By Henry J. Wilder, J. A. Drake, Grove B. Jones, and W. J. Geib. Pp. 30, fig. 1, map 1. July 25, 1906	4,000
Soil Survey of Perquimans and Pasquotank Counties, North Carolina. By J. E. Lapham and W. S. Lyman. Pp. 22, fig. 1, map 1. August 1, 1906	4,000
Soil Survey of Henderson County, Tennessee. By M. Earl Carr and Frank Bennett. Pp. 19, fig. 1, map 1. August 2, 1906	4,000
Soil Survey of Brown County, Kansas. By James L. Burgess, W. E. Tharp, and W. S. Lyman. Pp. 20, fig. 1, map 1. August 2, 1906	4,000
Soil Survey of York County, South Carolina. By J. A. Drake and H. L. Belden. Pp. 28, fig. 1, map 1. August 3, 1906	4,000
Soil Survey of Newton County, Indiana. By N. P. Neill and W. E. Tharp. Pp. 37, fig. 1, map 1. August 10, 1906	4,000
Soil Survey of Louisa County, Virginia. By Hugh H. Bennett and W. E. McLendon. Pp. 26, fig. 1, map 1. September 11, 1906	4,000
Soil Survey of Upshur County, West Virginia. By A. M. Griffen and Orla L. Ayrs. Pp. 20, fig. 1, map 1. September 20, 1906	4,000
Soil Survey of McCracken County, Kentucky. By Thos. D. Rice. Pp. 20, fig. 1, map 1. September 28, 1906	4,000
Soil Survey of the Oxford Area, Michigan. By Grove B. Jones and M. Earl Carr. Pp. 19, fig. 1, map 1. September 29, 1906	4,000
Soil Survey of the Gallatin Valley, Montana. By Macy H. Lapham and Charles W. Ely. Pp. 26, fig. 1, map 1. October 18, 1906	4,000

	Copies.
Advance Sheets, Field Operations of the Bureau of Soils, 1905—Cont'd.	
Soil Survey of the Carrington Area, North Dakota. By A. E. Kocher and Lewis A. Hurst. Pp. 26, fig. 1, maps 2. October 30, 1906	4,000
Soil Survey of Island County, Washington. By E. P. Carr and A. W. Mangum. Pp. 23, fig. 1, map 1. November 3, 1906	4,000
Soil Survey of Tippecanoe County, Indiana. By N. P. Neill and W. E. Tharp. Pp. 37, fig. 1, map 1. December 11, 1906	4,000
Soil Survey of the Binghamton Area, New York. By Elmer O. Fippin and William T. Carter, jr. Pp. 30, fig. 1, map 1. January 2, 1907	4,000
Soil Survey of Tangipahoa Parish, Louisiana. By A. M. Griffen and Thomas A. Caine. Pp. 27, fig. 1, map 1. January 19, 1907	4,000
Soil Survey of Sarpy County, Nebraska. By A. E. Kocher and Lewis A. Hurst. Pp. 21, fig. 1, map 1. January 22, 1907	4,000
Soil Survey of Montgomery County, Pennsylvania. By Henry J. Wilder, A. T. Strahorn, and W. J. Geib. Pp. 41, fig. 1, map 1. January 25, 1907	4,000
Soil Survey of Portage County, Wisconsin. By F. N. Meeker and R. T. Avon Burke. Pp. 32, fig. 1, map 1. January 29, 1907	4,000
Soil Survey of the Cleveland Area, Ohio. By J. E. Lapham and Charles N. Mooney. In Cooperation with the Ohio Agricultural Experiment Station. Pp. 24, fig. 1, map 1. February 7, 1907	4,000
Soil Survey of Houston County, Texas. By William T. Carter, jr., and A. E. Kocher. Pp. 33, fig. 1, map 1. February 9, 1907	4,000
Soil Survey of Lee County, Texas. By James L. Burgess and W. S. Lyman. Pp. 25, fig. 1, map 1. February 15, 1907	4,000
Soil Survey of New Hanover County, North Carolina. By J. A. Drake and H. L. Belden. Pp. 39, fig. 1, map 1. February 21, 1907	4,000
Soil Survey of Crawford County, Missouri. By W. Edward Hearn and Charles J. Mann. Pp. 18, fig. 1, map 1. March 5, 1907	4,000
Soil Survey of Scotland County, Missouri. By W. Edward Hearn and Charles J. Mann. Pp. 18, fig. 1, map 1. March 7, 1907	4,000
Soil Survey of Cherokee County, South Carolina. By J. A. Drake and H. L. Belden. Pp. 21, fig. 1, map 1. March 9, 1907	4,000
Soil Survey of the Everett Area, Washington. By E. P. Carr and A. W. Mangum. Pp. 31, fig. 1, map 1. March 13, 1907	8,000
Soil Survey of the Stockton Area, California. By Macy H. Lapham and W. W. Mackie. Pp. 39, fig. 1, pls. 2, map 1. March 14, 1907	4,000
Soil Survey of the Grand Junction Area, Colorado. By J. Garnet Holmes and Thomas D. Rice. Pp. 30, fig. 1, maps 2. March 16, 1907	4,000
Soil Survey of Lee County, Alabama. By W. Edward Hearn and W. J. Geib. Pp. 26, fig. 1, map 1. March 26, 1907	1,000
Soil Survey of Madison County, Kentucky. By A. M. Griffen and Orla L. Ayrs. Pp. 24, fig. 1, map 1. April 4, 1907	4,000
Soil Survey of the Waycross Area, Georgia. By M. Earl Carr and W. E. Tharp. Pp. 35, fig. 1, map. April 15, 1907	4,000
Soil Survey of the Yorktown Area, Virginia. By R. T. Avon Burke and Aldert S. Root. Pp. 28, fig. 1, map 1. April 24, 1907	6,000
Soil Survey of Hanover County, Virginia. By Hugh H. Bennett and W. E. McLendon. Pp. 37, fig. 1, map 1. May 14, 1907	4,000
Advance Sheets, Field Operations of the Bureau of Soils, 1906:	
Soil Survey of the San Marcos Area, Texas. By A. W. Mangum and W. S. Lyman. Pp. 37, fig. 1, map 1. April 22, 1907	6,000
Soil Survey of Escambia County, Florida. By A. M. Griffen, J. A. Drake, H. L. Belden, and L. A. Kolbe. Pp. 32, fig. 1, map 1. May 18, 1907	4,000
Soil Survey of Caddo Parish, Louisiana. By James L. Burgess, Lewis A. Hurst, Henry J. Wilder, and Charles F. Shaw. Pp. 36, fig. 1, maps 2. June 14, 1907	4,000
Soil Survey of Oklahoma County, Oklahoma. By W. E. McLendon and Grove B. Jones. Pp. 27, fig. 1, map 1. June 15, 1907	4,000
Soil Survey of Montgomery County, Mississippi. By Thomas A. Caine and Frank C. Schroeder. Pp. 24, fig. 1, map 1. June 15, 1907	4,000
Soil Survey of Pontotoc County, Mississippi. By Frank Bennett and R. A. Winston. Pp. 26, fig. 1, map 1. June 15, 1907	4,000

	Copies.
Progress of Beet-Sugar Industry in the United States in 1905. By Charles F. Saylor. Pp. 130, figs. 5. Report No. 82. Reprint, August 11, 1906	8,000
Information Concerning the Angora Goat. By George Fayette Thompson, M. S. Revised in 1906 by Sallie Russell Reeves, Editorial Office, Bureau of Animal Industry. Pp. 77, frontispiece, pls. 14, figs, 2. Bulletin No. 27. Reprint, February 2, 1907. Price 15 cents	1,500
Field Operations of the Bureau of Soils, 1905. (Seventh Report.) By Milton Whitney, Chief, with Accompanying Papers by Assistants in Charge of Field Parties. Pp. 1089, pls. 11, figs. 45, maps 47. February 21, 1907	1,000
Appointments, etc., in the Department of Agriculture. Letter from the Secretary of Agriculture, transmitting a Statement of Appointments, Promotions, and Changes in Salaries Paid from Lump Funds in His Department. House Document No. 439, 59th Congress, 2d session. Pp. 479. March 28, 1907	50
Operations of the Bureau of Animal Industry for the Fiscal Year Ended June 30, 1906. Pp. 147. House Document No. 743. 59th Congress, 2d session. April 1, 1907	25
Annual Reports of the Department of Agriculture for the fiscal year ended June 30, 1906. The Report of the Secretary of Agriculture. Departmental Reports. Pp. 698. May 20, 1907	1,500
Yearbook of the United States Department of Agriculture, 1906. Pp. 720, pls. 43, figs. 22, frontispiece. June 24, 1907	500,000

OFFICE OF THE SECRETARY.

Ostrich Farming in Arizona. By Watson Pickrell, Tempe, Arizona. Pp. iii, 399-406, Pls. 3. (From Yearbook of the Department for 1905.) July 17, 1906	500
Adulteration of Alfalfa Seed. Pp. 2. Circular No. 20. August 23, 1906	5,000
Standards of Purity for Food Products. Pp. 19. Circular No. 19. August 29, 1906	11,000
Reprint, June 29, 1907	5,000
Rules and Regulations for the Enforcement of the Food and Drugs Act. Pp. 20. Circular No. 21. October 20, 1906	10,000
Reprint, October 30, 1906	10,000
Reprint, October 31, 1906	10,000
Reprint, December 6, 1906	10,000
Reprint, January 16, 1907	20,000
Report of the Secretary of Agriculture, 1906. Pp. 103. November 24, 1906	2,300
Reprint, December 6, 1906	5,000
Report of the Secretary, 1906. Report No. 83. Pp. 94. December 27, 1906	86,000
Report of the Appointment Clerk for 1906. By J. B. Bennett. Pp. 35. (From Annual Reports of the Department for 1906.) December 14, 1906	500
Report on Statements of Dr. Cyril G. Hopkins Relative to Bureau of Soils. Milton Whitney, Chief of Bureau of Soils. Pp. 12. Circular No. 22. March 23, 1907	4,000
Reprint, March 23, 1907	1,000
Agriculture in our industries. Pp. 8. Speech of the Secretary of Agriculture, delivered before the Americus Club, Pittsburg, Pa., April 27, 1907. Circular No. 23. May 17, 1907	1,000
Progress of the Beet-Sugar Industry in the United States in 1906. Report No. 84. Pp. 135. May 28, 1907	5,000

ACCOUNTS AND DISBURSEMENTS.

Report of the Chief for 1906. By A. Zappone. Pp. 36. (From Annual Reports of the Department for 1906.) December 15, 1906	100
Expenditures of the Department of Agriculture for the Fiscal Year Ended June 30, 1906. (Prepared by A. Zappone, Chief. Pp. 294. *January 4, 1907*	75

BUREAU OF ANIMAL INDUSTRY.

	Copies.
The Cold Storage of Cheese. (Experiments of 1903–4.) By Clarence B. Lane, B. S., Assistant Chief of the Dairy Division. Pp. 26, pls. 6, figs. 4. Bulletin No. 83. July 9, 1906. Price 10 cents	7,000
Investigations in the Manufacture and Curing of Cheese. VI.—The Cold Curing of American Cheese, with a Digest of Previous Work on the Subject. By C. F. Doane, Expert in Dairying, Dairy Division. Pp. 68. Bulletin No. 85. July 9, 1906. Price 10 cents	5,700
How Parasites are Transmitted. By B. H. Ransom, in Charge of Zoological Laboratory. Pp. iv, 139–166, figs. 50. (From Yearbook for 1905.) July 12, 1906	500
The Fecundity of Poland China and Duroc Jersey Sows. By George M. Rommel, Animal Husbandman. Pp. 12. Circular No. 95. Reprint, July 21, 1906	1,000
Reprint, November 3, 1906	1,000
Index-Catalogue of Medical and Veterinary Zoology. Part 14. (Authors: L. to Leger.) By Ch. Wardell Stiles, Consulting Zoologist, and Albert Hassall, Assistant in Zoology. Pp. ii, 951–1044. Bulletin No. 39. July 31, 1906. Price 10 cents	2,000
Same, Part 15. (Authors: Legg to van der Linden.) Pp. ii, 1045–1116. Bulletin No. 39. August 15, 1906. Price 10 cents	2,000
Same, Part 16. (Authors: von Linden to Lyutkevich.) Pp. ii, 1117–1208. Bulletin No. 39. September 1, 1906. Price 10 cents	2,000
Same, Part 17. (Authors: M to Martirano.) Pp. ii, 1209–1304. Bulletin 39. June 22, 1907. Price 15 cents	2,000
A New Nemotode (*Gongylonema Ingluvicola*) Parasitic in the Crop of Chickens. By B. H. Ransom, B. Sc., A. M., Scientific Assistant in Charge of Zoological Laboratory. Pp. 3, fig. 1. Circular No. 64. Reprint, September 5, 1906	500
Reprint, February 7, 1907	1,000
Texas Fever, with Methods for its Prevention. By John R. Mohler, V. M. D., Chief of Pathological Division. Pp. 48, pls. 1, figs. 3. Bulletin No. 78. Reprint, July 31, 1906. Price 10 cents	1,500
Actinomycosis, or Lumpy Jaw. By D. E. Salmon, D. V. M. and Theobald Smith, M. D. (Revised by D. E. Salmon and John R. Mohler.) Pp. 10. Circular No. 96. August 8, 1906	3,000
Reprint, October 9, 1906	2,000
How to Get Rid of Cattle Ticks. By A. D. Melvin, Chief of the Bureau. Pp. 4, fig. 1. Circular No. 97. August 9, 1906	17,000
Reprint, August 22, 1906	10,000
Reprint, October 9, 1906	15,000
Reprint, April 24, 1907	15,000
Reprint, June 19, 1907	10,000
Enzymes in Cornstalks and Their Relation to Cornstalk Diseases. By T. M. Price, Ph. D., Biochemic Division. Pp. 66–75. (Reprinted from the Twenty-first Annual Report of the Bureau, 1904.) Circular No. 84. Reprint, August 15, 1906	300
Reprint, November 27, 1906	500
The Tuberculin Test of Hogs and Some Methods of Their Infection with Tuberculosis. By E. C. Schroeder, Superintendent of the Bureau Experiment Station, and John R. Mohler, Chief of Pathological Division. Pp. 51. Bulletin No. 88, September 12, 1906. Price 10 cents	3,000
The Life History of the Twisted Wireworm (*Hæmonchus contortus*) of Sheep and Other Ruminants. By B. H. Ransom, B. Sc., A. M., Scientific Assistant in Charge of Zoological Laboratory. Pp. 7, figs. 2. Circular No. 93. Reprint, September 13, 1906	500
Records of Dairy Cows in the United States. By Clarence B. Lane, B. S., Assistant Chief of Dairy Division. Pp. 184, pls. 17; figs. 6. Bulletin No. 75. Reprint, September 29, 1906. Price 15 cents	1,000
Some Unusual Host Relations of the Texas Fever Tick. By B. H. Ransom, B. Sc., A. M., Chief of Zoological Division. Pp. 8. Circular No. 98. October 2, 1906	2,500
Reprint February 15, 1907	1,000

	Copies.
Poultry Investigations at the Maine Agricultural Experiment Station. By Charles D. Woods, Director, and Gilbert M. Gowell, in Charge of Poultry Investigations, Maine Agricultural Experiment Station. Pp. 42, pls. 5, figs. 2. Bulletin No. 90. October 4, 1906. Price 15 cents	2,500
Market Milk Investigations. II.—The Milk and Cream Exhibit at the National Dairy Show, 1906. By Clarence B. Lane, Assistant Chief of Dairy Division. Pp. 21, pls. 4. Bulletin No. 87, October 5, 1906. Price 10 cents	2,500
Investigations in the Manufacture and Storage of Butter. II.—Preventing Molds in Butter Tubs. By L. A. Rogers, Bacteriological Chemist, Dairy Division. Pp. 13, fig. 1. Bulletin No. 89. October 11, 1906. Price 5 cents	5,000
Renovated Butter: Its Origin and History. By Levi Wells, Inspector, Dairy Division. (From Yearbook of the Department for 1905). Pp. ii. 393–398. October 16, 1906	2,500
Officials, Associations, and Educational Institutions Connected with the Dairy Interests of the United States for the Year 1906. Pp. 14. Circular No. 99. October 16, 1906	4,500
Feeding Prickly Pear to Stock in Texas. By David Griffiths, Assistant in Charge of Range and Cactus Investigations, Farm Management Investigations, Bureau of Plant Industry. Pp. 23, pls. 3, diagram 1. Bulletin No. 91. October 24, 1906. Price 10 cents	3,000
Directions for the Use of Blackleg Vaccine. By Victor A. Norgaard. Pp. 8, figs. 3. Circular No. 23. (Second Revision.) Reprint, October 26, 1906	10,000
Tuberculosis of the Food-Producing Animals. By D. E. Salmon, D. V. M. Pp. 99, pls. 9. Bulletin No. 38. November 1, 1906. Price 40 cents	3,500
Glanders and Farcy. By Rush Shippen Huidekoper, M. D. Vet. (Revised in 1903 by Leonard Pearson, B. S., V. M. D.) Pp. 12. Circular No. 78. Reprint, December 4, 1906	1,000
Information Concerning the Milch Goat. By George Fayette Thompson, M. S. Pp. 85, pls. 16, figs. 7. Bulletin No. 68. Reprint, December 7, 1906. Price 15 cents	1,000
The New Meat-Inspection Law and Its Bearing Upon the Production and Handling of Meats. By George P. McCabe, Solicitor for the Department of Agriculture. Pp. 16. Circular No. 101. January 5, 1907	7,000
Reprint, February 8, 1907	2,000
Reprint, March 8, 1907	2,000
The Milking Machine as a Factor in Dairying. I.—Practical Studies of a Milking Machine. By C. B. Lane, Assistant Chief of the Dairy Division. II.—Bacteriological Studies of a Milking Machine. By W. A. Stocking, jr., Bacteriologist, Connecticut (Storrs) Agricultural Experiment Station. Pp. 55, pls. 4, figs. 6. Bulletin No. 92. January 29, 1907. Price 15 cents	3,500
Hints to Poultry Raisers. By G. Arthur Bell, Assistant Animal Husbandman. Pp. 3. Circular No. 82. Reprint, February 20, 1907	500
Proceedings of a Conference of Federal and State Representatives to Consider Plans for the Eradication of the Cattle Tick, Held at Nashville, Tenn., December 5 and 6, 1906. Pp. 98. Bulletin No. 97. March 4, 1907. Price 15 cents	5,600
Stomach Worms (*Hæmonchus contortus*) in Sheep. By B. H. Ransom, Chief of the Division of Zoology. Pp. 7. Circular No. 102. March 8, 1907	3,000
Abortion, or Slinking the Calf. By James Law, F. R. C. V. S., Professor of Veterinary Science, etc., in Cornell University. Pp. 11. Circular No. 67. Reprint, March 9, 1907	2,000
Investigations in the Use of the Bomb Calorimeter. By J. August Fries, Assistant Expert in Animal Nutrition. Pp. 39. Bulletin No. 94, Bureau of Animal Industry. March 11, 1907. Price 10 cents	2,700
The Bacteriolytic Power of the Blood Serum of Hogs. By B. M. Bolton, Bacteriologist, Biochemic Division. Pp. 62, figs. 4. Bulletin No. 95. March 12, 1907. Price 10 cents	2,000
Records of Dairy Cows: Their Value and Importance in Economic Milk Production. By Clarence B. Lane, Assistant Chief of Dairy Division. Pp. 38, figs. 10. Circular No. 103. Reprint, March 29, 1907	3,000

	Copies.
Baby Beef. By Ernest G. Ritzman, Assistant Animal Husbandman. Pp. 34, figs. 6. Circular No. 105. April 2, 1907	1,000
Welsh Black Cattle. By John Roberts. Pp. 29, pls. 5. Circular No. 104, April 4, 1907	1,300
Capons and Caponizing. By Rob R. Slocum, Poultry Assistant. Pp. 10, figs. 7. Circular No. 107. April 9, 1907	3,000
Reprint, June 29, 1907	1,000
The Production and Consumption of Meat and the Prices, Movement, and Registration of Live Stock in the United States. Pp. ii, 277–297. (Reprinted from the Twenty-Second Annual Report of the Bureau, 1905.) April 13, 1907	500
Notes on the Cattle Tick and Texas Fever. By E. C. Schroeder, M. D. V., Superintendent of the Bureau Experiment Station. Persistence of Texas Fever Organism in Blood of Southern Cattle. By E. C. Schroeder and W. E. Cotton, Expert Assistant at the Experiment Station. Pp. ii, 49–78. (Reprinted from the Twenty-second Annual Report of the Bureau, 1905.) April 13, 1907	600
Government Encouragement of Imported Breeds of Horses. By George M. Rommel, B. S. A., Animal Husbandman. Pp. i, 147–159. (Reprinted from the Twenty-second Annual Report of the Bureau, 1905.) April 13, 1907	500
Publications of the Bureau of Animal Industry. A. D. Melvin, Chief of Bureau. Pp. 24. Circular No. 106. April 15, 1907	3,000
Poultry Management. By G. Arthur Bell, B. S. A., Assistant Animal Husbandman. Pp. ii, 213–266, pls. 5, figs. 7. (Reprinted from the Twenty-second Annual Report of the Bureau, 1905.) April 17, 1907	1,000
Trichinosis: A Danger in the Use of Raw Pork for Food. By B. H. Ransom, Chief of Division of Zoology. Pp. 6, figs. 5. Circular No. 108. April 18, 1907	3,500
Soft-Cheese Studies in Europe. By Charles Thom, Ph. D., Mycologist in Cheese Investigations. Pp. iv. 79–109, pls. 3. (Reprinted from the Twenty-second Annual Report of the Bureau, 1905.) April 19, 1907	500
The Preparation of Emulsions of Crude Petroleum. By T. M. Price, Ph. D., Biochemic Division. Pp. 4. Circular No. 89. Reprint, May 10, 1907	1,000
Investigations in the Manufacture and Curing of Cheese. VII.—Directions for Making the Camembert Type of Cheese. By Theodore W. Issajeff, Expert Cheese Maker, Dairy Division. Pp. 21, figs. 10. Bulletin No. 98. May 11, 1907. Price 5 cents	3,000
The Danger from Tubercle Bacilli in the Environment of Tuberculous Cattle. By E. C. Schroeder, M. D. V., Superintendent of the Bureau Experiment Station, and W. E. Cotton, Expert Assistant. Pp. 24. Bulletin No. 99. May 13, 1907. Price 5 cents	4,000
Danger of Infection with Tuberculosis by Different Kinds of Exposure. By E. C. Schroeder, M. D. V., Superintendent of the Bureau Experiment Station, and W. E. Cotton, Expert Assistant. (Reprinted from the Twenty-first Annual Report of the Bureau, 1904.) Pp. 44–65. Circular No. 83. Reprint, May 18, 1907	1,000
Quail Disease in the United States. By George Byron Morse, M. D. V., Assistant in Bacteriology and Pathology. Pp. 11, figs. 3. Circular No. 109. May 18, 1907	3,500
Reprint, June 26, 1907	500
Methods of Eradicating Cattle Ticks. By Louis A. Klein, V. M. D., Expert in Texas Fever, Pathological Division. Pp. 16, figs. 3. Circular No. 110. May 20, 1907	10,000
The Germicidal Value of Liquor Cresolis Compositus (U. S. P.). By C. N. McBryde, M. D., Bacteriologist, Biochemic Division. Pp. 24. Bulletin No. 100. June 4, 1907. Price 5 cents	2,500
A Comparative Study of Tubercle Bacilli from Varied Sources. By John R. Mohler, V. M. D., Chief of Pathological Division, and Henry J. Washburn, D. V. S., Assistant Chief. Pp. 88, pls. 6. Bulletin No. 96. June 10, 1907. Price 40 cents	3,500
Directions for the Pasteurization of Milk. D. E. Salmon, Chief of Bureau. Pp. 2, figs. 2. Circular No. 1, revised. Reprint, June 14, 1907	2,000

	Copies.
Sanitary Relations of the Milk Supply. (Report of the Committee on Sanitary Relations to a conference appointed by the Commissioners of the District of Columbia to consider and report upon the local milk supply.) Pp. 7. Circular No. 111. June 21, 1907	10,000
Some Examples of the Development of Knowledge Concerning Animal Diseases. By D. E. Salmon, D. V. M. Pp. 45. (From Yearbook of the Department for 1899.) Reprint, December 12, 1906	300
The American Saddle Horse. By Gen. John B. Castleman, Louisville, Ky. Pp. iii, 62–78, pls. 5. (From 19th Annual Report of the Bureau, 1902.) Reprint, December 15, 1906	1,000
Report of the Chief of the Bureau for 1906. By A. D. Melvin. Pp. 56. (From Annual Reports of the Department for 1906.) December 18, 1906	2,500
A Rapid Method for the Determination of Water in Butter. By C. E. Gray, Assistant Dairyman in Charge of Butter Investigations, Dairy Division. Pp. 6, figs. 2. Circular No. 100. January 2, 1906	12,000
The Relation of Tuberculous Lesions to the Mode of Infection. By E. C. Schroeder, Superintendent of the Bureau Experiment Station, and W. E. Cotton, Expert Assistant. Pp. 19. Bulletin No. 93. January 3, 1907. Price 5 cents	3,500
Reprint, May 18, 1907	500
The Tapeworms of American Chickens and Turkeys. By B. H. Ransom, B. Sc., A. M., Acting Zoologist. Pp. 268–285, figs. 31. Circular No. 85. Reprint, June 29, 1907	500
The Dairy Herd: Its Formation and Management. By Henry E. Alvord, C. E., Chief of Dairy Division. Pp. 30. Farmers' Bulletin No. 55. Reprint, July 18, 1906	15,000
Reprint, September 28, 1906	10,000
Reprint, February 11, 1907	15,000
Poultry Raising on the Farm. By D. E. Salmon, D. V. M., Chief of Bureau. Pp. 16, figs. 31. Farmers' Bulletin No. 141. Reprint, July 18, 1906	30,000
Reprint, November 6, 1906	15,000
Reprint, March 16, 1907	20,000
Hog Raising in the South. By S. M. Tracy, M. S. Pp. 40. Farmers' Bulletin No. 100. Reprint, July 23, 1906	15,000
Reprint, March 15, 1907	10,000
Reprint, May 24, 1907	10,000
Standard Varieties of Chickens. By George E. Howard, Secretary of National Poultry and Pigeon Association. Pp. 48, figs. 42. Farmers' Bulletin No. 51. Reprint, July 24, 1906	30,000
Reprint, April 16, 1907	20,000
Reprint, May 21, 1907	15,000
Butter Making on the Farm. By Edwin H. Webster, M. S., Chief of Dairy Division. Pp. 32. Farmers' Bulletin No. 241. Reprint, July 28, 1906	30,000
Reprint, February 1, 1907	20,000
Reprint, April 1, 1907	15,000
Facts About Milk. By R. A. Pearson, M. S., Professor of Dairy Industry, College of Agriculture, Cornell University. Pp. 32, figs. 8. Farmers' Bulletin No. 42, revised. Reprint, August 15, 1906	20,000
Reprint, March 19, 1907	15,000
Reprint, June 29, 1907	5,000
Milk Fever: Its Simple and Successful Treatment. By John R. Mohler, V. M. D., Chief of Pathological Division. Pp. 16, figs. 2. Farmers' Bulletin No. 206. Reprint, August 16, 1906	15,000
Reprint, April 18, 1907	10,000
Hog Cholera and Swine Plague. By D. E. Salmon, D. V. M., Chief, Bureau of Animal Industry. Pp. 16. Farmers' Bulletin No. 24. Reprint, August 18, 1906	15,000
Reprint, November 30, 1906	15,000
Reprint, April 24, 1907	15,000
Breeds of Dairy Cattle. By Henry E. Alvord, C. E., Chief of Dairy Division. Pp. 48, figs. 21. Farmers' Bulletin No. 106. Reprint, August 18, 1906	15,000
Reprint, December 5, 1906	15,000
Reprint, April 24, 1907	15,000

	Copies.
Pig Management. By George M. Rommel, B. S. A., Expert in Animal Husbandry. Pp. 40, figs. 23. Farmers' Bulletin No. 205. Reprint, August 21, 1906	10,000
Reprint, December 11, 1906	15,000
Reprint, March 11, 1906	15,000
Reprint, May 23, 1907	10,000
Reprint, June 29, 1907	5,000
Cheese Making on the Farm. Compiled by Henry E. Alvord, Chief of Dairy Division. Pp. 16, figs. 3. Farmers' Bulletin No. 166. Reprint, August 21, 1906	10,000
Reprint, April 26, 1907	5,000
The Cattle Tick in Its Relation to Southern Agriculture. By August Mayer, Shreveport, La. Pp. 24. Farmers' Bulletin No. 261. August 24, 1906	30,000
Ducks and Geese: Standard Varieties and Management. By George E. Howard. (Revised by G. Arthur Bell, Assistant Animal Husbandman, April, 1906.) Pp. 55, figs. 32. Farmers' Bulletin No. 64. Reprint, September 11, 1906	15,000
Reprint, December 4, 1906	10,000
Reprint, March 20, 1907	10,000
Reprint, June 29, 1907	5,000
Horseshoeing. By John W. Adams, A. B., V. M. D., Professor of Surgery, etc., University of Pennsylvania. Pp. 32, figs. 18. Farmers' Bulletin No. 179. Reprint, September 19, 1906	15,000
Reprint, December 4, 1906	10,000
Reprint, April 12, 1907	10,000
Scabies of Cattle. By Richard W. Hickman, V. M. D., Chief of Quarantine Division. Pp. 32, figs. 17. Farmers' Bulletin No. 152. Reprint, September 24, 1906	10,000
Reprint, April 25, 1907	5,000
Dairying in the South. By S. M. Tracy, M. S. Pp. 48, figs. 4. Farmers' Bulletin No. 151. Reprint, September 24, 1906	10,000
Reprint, April 13, 1907	10,000
Scab in Sheep. By D. E. Salmon, D. V. M., Chief, and Ch. Wardell Stiles, Ph. D., Zoologist, Bureau of Animal Industry. Pp. 40, figs. 17. Farmers' Bulletin No. 159. Reprint, September 25, 1906	10,000
Reprint, April 22, 1907	10,000
Turkeys: Standard Varieties and Management. By T. F. McGrew, New York City. Pp. 40, figs. 12. Farmers' Bulletin No. 200. Reprint, September 26, 1906	20,000
Reprint, January 17, 1907	15,000
Reprint, May 22, 1907	10,000
Marketing Live Stock. By Prof. Charles S. Plumb, Professor of Animal Husbandry, Ohio State University. Pp. 40. Farmers' Bulletin No. 184. Reprint, September 26, 1906	15,000
Reprint, January 16, 1907	15,000
Meat on the Farm, Butchering, Curing, and Keeping. By Andrew Boss, of the College of Agriculture, University of Minnesota. Pp. 38, figs. 35. Farmers' Bulletin No. 183, revised September, 1906. October 6, 1906	10,000
Reprint, October 23, 1906	15,000
Reprint, January 11, 1907	15,000
Reprint, May 8, 1907	15,000
Some Essentials in Beef Production. By Charles F. Curtiss, Director of the Iowa Agricultural Experiment Station. Pp. 24, figs. 17. Farmers' Bulletin No. 71. Reprint, October 17, 1906	10,000
Reprint, April 19, 1907	10,000
Sheep Feeding. By John A. Craig, Professor of Animal Husbandry in the University of Wisconsin. Pp. 24. Farmers' Bulletin No. 49. Reprint, October 27, 1907	10,000
Reprint, February 27, 1907	10,000
Squab Raising. (Revised May, 1904.) By William E. Rice. Pp. 32, figs. 11. Farmers' Bulletin No. 177. Reprint, October 29, 1906	10,000
Reprint, March 26, 1907	10,000

	Copies.
Care of Milk on the Farm. By R. A. Pearson, M. S., Professor of Dairy Industry at Cornell University. (Revised by the author, September, 1906.) Pp. 40, figs. 11. Farmers' Bulletin No. 63, December 15, 1906	15,000
Reprint, May 8, 1907	15,000
Incubation and Incubators. By Richard H. Wood, M. D., Pp. 32, figs. 11. Farmers' Bulletin No. 236. Reprint, December 18, 1906	15,000
Reprint, April 2, 1907	10,000
The Cream Separator on Western Farms. By Ed. H. Webster and C. E. Gray, Special Agents, Dairy Division. Pp. 24. Farmers' Bulletin No. 201. Reprint, March 23, 1907	10,000
Texas or Tick Fever and Its Prevention. By John R. Mohler, V. M. D., Chief of Pathological Division. Pp. 47, figs. 6. Farmers' Bulletin No. 258. Reprint, April 18, 1907	10,000
Reprint, June 14, 1907	10,000
Poultry Management. By G. Arthur Bell, Assistant Animal Husbandman. Pp. 48, figs. 14. Farmers' Bulletin No. 287. June 29, 1907	30,000

BUREAU OF BIOLOGICAL SURVEY.

Meadow Mice in Relation to Agriculture and Horticulture. By D. E. Lantz, Assistant Biologist, Biological Survey. Pp. ii, 363-376, pls. 4, fig. 1. (From Yearbook of the Department for 1905.) July 12, 1906	5,000
Game Protection in 1905. By T. S. Palmer, Assistant in Charge of Game Preservation. Pp. iii, 611-617. (From Yearbook of the Department for 1905.) July 21, 1906	5,000
Federal Game Protection—A Five Years' Retrospect. By T. S. Palmer, Assistant in Charge of Game Preservation. Pp. ii, 541-562. (From Yearbook of the Department for 1905.) Reprint, August 7, 1906	500
Directory of Officials and Organizations Concerned with the Protection of Birds and Game, 1906. By T. S. Palmer, Assistant in Charge of Game Preservation. Pp. 16. Circular No. 53. August 23, 1906	3,000
Distribution and Migration of North American Ducks, Geese, and Swans. By Wells W. Cooke, Assistant. Pp. 90. Bulletin No. 26. September 25, 1906. Price 10 cents	5,000
North American Fauna No. 25. Biological Survey of Texas. Life Zones, with Characteristic Mammals, Birds, Reptiles, and Plants. By Vernon Bailey, Chief Field Naturalist. Pp. 222, pls. 16, figs. 24. Reprint, September 27, 1906. Price 40 cents	500
The North American Eagles and Their Economic Relations. By Harry C. Oberholser, Assistant Ornithologist. Pp. 31, pls. 2, figs. 2. Bulletin No. 27. October 4, 1906. Price 10 cents	5,000
Statistics of Hunting Licenses. By T. S. Palmer, in Charge of Game Preservation. Pp. 24, figs. 6. Circular No. 54. October 19, 1906	6,000
North American Fauna No. 26. Revision of the Skunks of the Genus Spilogale. By Arthur H. Howell, Assistant Biologist. Pp. 55, pls. 10. November 23, 1906. Price 50 cents	3,500
The Blue Jay and Its Food. By F. E. L. Beal, Assistant Biologist. Pp. 10, figs. 3. (From the Yearbook of the Department for 1896.) Reprint, December 4, 1906	1,000
Four Common Birds of the Farm and Garden. By Sylvester D. Judd, Assistant Ornithologist. Pp. 14, figs. 4. (From Yearbook of the Department for 1895.) Reprint, December 5, 1906	1,000
Reprint, May 2, 1907	1,000
The Danger of Introducing Noxious Animals and Birds. By T. S. Palmer, Assistant Chief. Pp. 24, pls. 1, figs. 6. (From Yearbook of the Department for 1898.) Reprint, December 7, 1906	1,000
Report of the Acting Chief of the Bureau of Biological Survey for 1906. By Henry W. Henshaw. Pp. 24. (From Annual Reports of the Department for 1906.) December 14, 1906	1,500
Directions for the Destruction of Wolves and Coyotes. By Vernon Bailey, in Charge of Geographic Distribution. Pp. 6. Circular No. 55. March 13, 1907	10,000
Reprint, March 13, 1907	2,500
Reprint, April 18, 1907	35,000
Some New Facts About the Migration of Birds. By Wells W. Cooke, Assistant. Pp. iii, 371-386. (From Yearbook of the Department for 1903.) Reprint, April 26, 1907	2,000

	Copies.
Value of Swallows as Insect Destroyers. By H. W. Henshaw. Pp. 4. Circular No. 56. April 30, 1907	202,000
Reprint, May 21, 1907	20,000
Birds Useful in the War Against the Cotton Boll Weevil. By H. W. Henshaw. Pp. 4. Circular No. 57. April 30, 1907	102,000
Reprint, May 20, 1907	10,000
Bird Day in the Schools. T. S. Palmer, Acting Chief of Division. Pp. 4. Circular No. 17. Reprint, May 6, 1907	500
Destruction of Deer by the Northern Timber Wolf. By Vernon Bailey, Assistant in Charge of Geographic Distribution. Pp. 2. Circular No. 58. May 6, 1907	7,500
The Bobwhite and Other Quails of the United States in Their Economic Relations. By Sylvester D. Judd, Assistant. Pp. 66, pls. 2, figs. 10. Bulletin No. 21. Reprint, May 10, 1907	1,000
Game Protection in Florida. R. W. Williams, Jr., Assistant, Biological Survey. Pp. 11. Circular No. 59. May 10, 1907	3,000
List of Publications of the Biological Survey, Department of Agriculture, 1907. Pp. 7. Circular No. 60. May 25, 1907	1,700
Revised, June 29, 1907	500
Some Common Birds in their Relation to Agriculture. By F. E. L. Beal, B. S., Assistant in Charge Economic Ornithology, Biological Survey. Pp. 48, figs. 22. Farmers' Bulletin No. 54. (Revised March, 1904.) Reprint, August 11, 1906	15,000
Reprint, March 23, 1907	10,000
Game Laws for 1905. A Summary of the Provisions Relating to Seasons, Shipment, Sale, and Licenses. By T. S. Palmer, Henry Oldys, and R. W. Williams, Jr. Pp. 54, figs. 6. Farmers' Bulletin No. 230. Reprint, August 11, 1906	5,000
Game Laws for 1906. A Summary of the Provisions Relating to Seasons, Shipment, Sale, and Licenses. By T. S. Palmer and R. W. Williams, Jr. Pp. 54, figs. 4. Farmers' Bulletin No. 265. August 31, 1906	30,000
Reprint, December 10, 1906	15,000
Importation of Game Birds and Eggs for Propagation. By T. S. Palmer and Henry Oldys. Pp. 30, fig. 1. Farmers' Bulletin No. 197. Reprint, March 26, 1907	5,000
Methods of Destroying Rats. By David E. Lantz, Assistant. Pp. 8, fig. 1. Farmers' Bulletin No. 297. June 3, 1907	30,000

BUREAU OF CHEMISTRY.

Changes in Official Methods of Analysis and Additions thereto, 1899 to 1905. By H. W. Wiley, Chief of Bureau. Pp. 28. Circular No. 30. July 2, 1906	2,200
Report on Insecticides, Fungicides, and Disinfectants; also The Deterioration of Bleaching Powder. By Bernard H. Smith. Pp. 26–35. (From Bulletin No. 99.) July 9, 1906	50
Table Sirups. By H. W. Wiley, Chief of the Bureau. Pp. iii, 241–248, pls. 2. (From Yearbook of the Department for 1905.) July 16, 1906	500
Reprint, October 31, 1906	250
Reprint, February 11, 1907	300
Formaldehyde: Its Composition and Uses. By Bernard H. Smith, of the Bureau of Chemistry. Pp. ii, 477–482. (From Yearbook of the Department for 1905.) July 18, 1906	500
Reprint, October 16, 1906	500
Reprint, January 4, 1907	500
Reprint, February 16, 1907	1,000
Proceedings of the Twenty-second Annual Convention of the Association of Official Agricultural Chemists, held at Washington, D. C., November 16, 17, and 18, 1905. Edited by Harvey W. Wiley, Secretary of the Association. Pp. 211, figs. 2. Bulletin No. 99. July 21, 1906. Price 20 cents	2,000
Officials Charged with the Enforcement of Food Laws in the United States and Canada. (Revised to April 1, 1906.) By W. D. Bigelow, Chief, Division of Foods. Pp. 29. Circular No. 16. July 31, 1906	2,500
Results of Borax Experiment. By H. W. Wiley, Chief. Pp. 27. Circular No. 15. Reprint, August 7, 1906	500

	Copies.
Foods and Food Control. Revised to July 1, 1905. By W. D. Bigelow, Chief of Division of Foods, with the Collaboration of C. H. Greathouse, Assistant in Charge of Indexing, Division of Publications. Pp. vi, 705–778. Bulletin No. 69, Part IX. August 31, 1906. Price 10 cents	3,000
Drug Legislation in the United States. By Lyman F. Kobler, Chief of Drug Laboratory, with the Collaboration of Earl T. Ragan, Scientific Assistant. Pp. 217. Bulletin No. 98. September 11, 1906. Price 25 cents	1,000
Provisional Methods for the Determination of Food Preservatives as Authorized by the Association of Official Agricultural Chemists, 1905. By W. D. Bigelow, Chief of Division of Foods and Referee on Food Adulteration, A. O. A. C., 1901–1905. Pp. 13. Circular No. 28. Reprint, September 12, 1906	500
Reprint, December 18, 1906	500
Reprint, March 1, 1907	1,500
Changes in Provisional Methods for the Analysis of Foods and Additions thereto, from 1902 to 1905. By H. W. Wiley, Chief of Bureau. Pp. 20. Circular No. 29. Reprint, September 13, 1906	500
Reprint, December 20, 1906	500
Reprint, March 1, 1907	1,500
General Results of the Investigations Showing the Effect of Salicylic Acid and Salicylates Upon Digestion and Health. By H. W. Wiley, M. D., Chief. Pp. 12, fig. 1. Circular No. 31. October 25, 1906	3,000
Reprint, December 18, 1906	1,000
Reprint, March 9, 1907	3,000
Experimental Work in the Production of Table Sirup at Waycross, Georgia, 1905, Together with a Summary of the Four-year Experiment on Fertilization of Sugar Cane. By H. W. Wiley, Chief of the Bureau, with the collaboration of W. B. Roddenbery, G. R. Youmans, and Arthur Given. Pp. 38. Bulletin No. 103. November 17, 1906. Price 10 cents	3,500
Influence of Food Preservatives and Artificial Colors on Digestion and Health. II.—Salicylic Acid and Salicylates. By H. W. Wiley, M. D., with the Collaboration of W. D. Bigelow, Chief of the Division of Foods; F. C. Weber, and others. Pp. v, 479–760, figs. 3. Bulletin No. 84, Part II. November 30, 1906. Price 30 cents	1,000
Foreign Trade Practices in the Manufacture and Exportation of Alcoholic Beverages and Canned Goods. Summary of an Investigation made in Great Britain and Ireland, Germany, and France. By H. W. Wiley, Chief of the Bureau of Chemistry. Pp. 45, pls. 2, figs. 5. Bulletin No. 102. December 20, 1906. Price 10 cents	4,000
Food Legislation During the Year Ended June 30, 1906. By W. D. Bigelow, Chief, Division of Foods. Pp. 53. Bulletin No. 104. December 29, 1906. Price 10 cents	2,500
Report of the Chemist for 1906. By H. W. Wiley. (From Annual Reports of the Department for 1906.) Pp. 29. January 3, 1907	300
Reprint, March 8, 1907	500
Methods of Analysis Adopted by the Association of Official Agricultural Chemists, November 11, 12, and 14, 1898. Edited by Harvey W. Wiley, Secretary. Pp. 86. Bulletin No. 46, revised. Reprint, January 4, 1907. Price 5 cents	500
Coloring Matters for Foodstuffs and Methods for Their Detection. (A preliminary report made to the Association of Official Agricultural Chemists). By W. G. Berry, Associate Referee on Colors. Pp. 40. Circular No. 25. February 9, 1907. Reprint	300
Reprint, April 15, 1907	1,000
Extracts from the Proceedings of the Association of Official Agricultural Chemists, 1906. Pp. 14. Circular No. 32. H. W. Wiley, Chief of Bureau. (An advance circular giving the recommendations of referees as adopted, and appointments affecting the work of 1907.) February 13, 1907	2,100
Reprint, April 24, 1907	500
Methods for the Investigation of Canceling Inks and Other Stamping *Inks*. Pp. 6. Circular No. 12, revised. Reprint, February 16, 1907	250

	Copies.
The Lime-Sulphur-Salt Wash and Its Substitutes. By J. K. Haywood, Chief of Miscellaneous Laboratory, in Collaboration with the Bureau of Entomology. Pp. 29. Bulletin No. 101. March 1, 1907. Price 5 cents	2,800
Report on Methods of Beer Analysis. By H. E. Barnard, Chemist Indiana State Board of Health, and Associate Referee on Food Adulterations, A. O. A. C. Pp. 16. Circular No. 33. March 15, 1907	3,500
Examination of Papers. By F. P. Veitch, Chief, Leather and Paper Laboratory. Pp. 10. Circular No. 34. April 13, 1907	3,000
Report on Fats and Oils. By L. M. Tomlin, Associate Referee. Pp. 29–37. (From Bulletin 105, Proceedings A. O. A. C., 1906.) June 20, 1907	100
Report on Determination of Water in Foods. By F. C. Weber, Associate Referee. Pp. 8. (From Bulletin 105, Proceedings A. O. A. C., 1906.) June 21, 1906	100
Sorghum Sirup Manufacture. By A. A. Denton, Medicine Lodge, Kans. Pp. 40, figs. 26. Farmers' Bulletin No. 135. Reprint, August 29, 1906	10,000
Household Tests for the Detection of Oleomargarine and Renovated Butter. By G. E. Patrick, Assistant in the Division of Chemistry. Pp. 12. Farmers' Bulletin No. 131. Reprint, October 17, 1906	5,000
Reprint, March 26, 1907	5,000
Reprint, June 29, 1907	5,000
The Sugar Beet: Culture, Seed Development, Manufacture, and Statistics. By H. W. Wiley, Chief of the Bureau. (Second Revised Edition.) Pp. 48, figs. 24. Farmers' Bulletin No. 52. Reprint, October 19, 1906	10,000
Reprint, April 10, 1907	10,000
Insecticides and Fungicides: Chemical Composition and Effectiveness of Certain Preparations. By J. K. Haywood, In Charge of Insecticide and Agricultural Water Laboratory, cooperating with the Division of Entomology. Pp. 16. Farmers' Bulletin No. 146. Reprint, October 30, 1906	5,000
April 2, 1907	5,000
Industrial Alcohol: Sources and Manufacture. By H. W. Wiley, Chief of Bureau. Pp. 47, figs. 10. Farmers' Bulletin No. 268. November 2, 1906	20,000
Reprint, January 3, 1907	20,000
Reprint, March 29, 1907	20,000
Reprint, May 9, 1907	15,000
Industrial Alcohol: Uses and Statistics. By H. W. Wiley, Chief of Bureau. Pp. 32, figs. 10. Farmers' Bulletin No. 269. November 5, 1906	20,000
Reprint, January 31, 1907	20,000
Reprint, April 6, 1907	20,000
Reprint, May 10, 1907	15,000

BUREAU OF ENTOMOLOGY.

The Harlequin Cabbage Bug, or Calico Back (*Murgantia histrionica* Hahn). By L. O. Howard, Entomologist. Pp. 4. Circular No. 10. Reprint, July 3, 1906	1,000
General Work Against Insects Which Defoliate Shade Trees in Cities and Towns. By L. O. Howard, Entomologist. Pp. 4. Circular No. 15. Reprint, July 9, 1906	1,000
Reprint, January 11, 1907	250
Reprint, March 11, 1907	1,000
The Ox Warble (*Hypoderma lineata* Villers). By C. L. Marlatt, First Assistant Entomologist. Pp. 10. Circular No. 25. Reprint, July 10, 1906	1,000
The Imported Cabbage Worm (*Pontia rapac* Linn.). By F. H. Chittenden, In Charge of Breeding Experiments. Pp. 8, figs. 6. Circular No. 60. Reprint, July 12, 1906	1,000
An Important Enemy to Fruit Trees. The San Jose Scale: Its Appearance in the Eastern United States. Measures To be Taken to Prevent Its Spread and to Destroy it. By L. O. Howard. Pp. 10, figs. 5. Circular No. 3. Reprint, July 12, 1906	
Reprint, *February 2, 1907*	

	Copies.
Requirements to be Complied with by Nurserymen or Others who make Interstate Shipments of Nursery Stock. By A. F. Burgess, Secretary of the American Association of Horticultural Inspectors. Pp. 6. Circular No. 75. July 14, 1906	3,000
The Army Worm (*Leucania unipuncta* Haw.). By L. O. Howard, Entomologist. Pp. 5, figs. 3. Circular No. 4. Reprint, July 17, 1906	1,000
The Cotton Red Spider. (*Tetranychus gloveri* Bks.). By E. S. C. Titus, Special Field Agent. Pp. 5, figs. 2. Circular No. 65. Reprint, July 17, 1906	1,000
Insect Enemies of Forest Production. By A. D. Hopkins, In Charge of Forest Insect Investigations. Pp. iii, 249–256, figs. 9. (From Yearbook of the Department for 1905. July 17, 1906	500
The Gypsy and Browntail Moths and Their European Parasites. By. L. O. Howard, Chief of the Bureau. Pp. iii, 123–138. (From Yearbook of the Department for 1905.) July 18, 1906	500
Reprint, November 24, 1906	250
Farm Practice in the Control of Field-Crop Insects. By F. M. Webster, In Charge of Cereal and Forage-Plant Insect Investigations. Pp. iii, 465–476, pls. 2, figs. 2. (From Yearbook of the Department for 1905.) July 18, 1906	500
The Principal Insect Enemies of the Peach. By A. L. Quaintance, In Charge of Deciduous Fruit Investigations. Pp. v, 325–348, pls. 7, figs. 7. (From Yearbook of the Department for 1905.) July 18, 1906	500
Reprint, November 2, 1906	1,000
The Destructive Green Pea Louse (*Nectarophora destructor* John.). By F. H. Chittenden, Assistant Entomologist. Pp. 8, figs. 3. Circular No. 43. Reprint, July 19, 1906	1,000
The Periodical Cicada in 1906 (*Tibicen septendecim* L.). By C. L. Marlatt. Pp. 5, figs. 3. Circular No. 74. Reprint, August 3, 1906	2,000
The House Centipede (*Scutigera forceps*). By C. L. Marlatt, First Assistant Entomologist. (From Bulletin No. 4.) Pp. 47–50, pls. 4, figs. 2. Circular No. 48. Reprint, August 3, 1906	1,000
House Ants (*Monomorium pharaonis* et al.). By C. L. Marlatt, First Assistant Entomologist. Pp. 4, figs. 3. Circular No. 34. Reprint, August 4, 1906	1,000
Revised, June 15, 1907	1,000
Hydrocyanic-Acid Gas Against Household Insects. By L. O. Howard, Entomologist. Pp. 6. Circular No. 46. Reprint, August 6, 1906	1,000
Revised, March 2, 1907	3,000
Reprint, June 3, 1907	5,000
The Clover Mite (*Bryobia pratensis* Garman). By C. L. Marlatt, First Assistant Entomologist. Pp. 4. Circular No. 19. Reprint, August 6, 1906	1,000
Reprint, November 20, 1906	3,000
The Carpet Beetle or "Buffalo Moth" (*Anthrenus scrophulariae* L.). By L. O. Howard, Entomologist. Pp. 4, fig. 1. Circular No. 5. Reprint, August 7, 1906	1,000
The Principal Injurious Insects of 1905. Pp. 628–636. (From Yearbook of the Department for 1905.) Reprint, August 13, 1906	500
Some Insects Injurious to Forests. Part II—The Western Pine-Destroying Bark Beetle. By J. L. Webb, Special Field Agent. Pp. vi, 17–30, pls. 2, figs. 6. Bulletin No. 58. August 14, 1906. Price 10 cents	3,000
Powder-Post Injury to Seasoned Wood Products. By A. D. Hopkins, In Charge of Forest Insect Investigations. Pp. 5, fig. 1. Circular No. 55. Reprint, August 18, 1906	1,000
Proliferation as a Factor in the Natural Control of the Mexican Cotton Boll Weevil. By W. E. Hinds, Ph. D., in charge of Cotton Boll Weevil Laboratory. Pp. 45, pls. 6. Bulletin No. 59. August 24, 1906. Price 15 cents	3,000
Habits and Life Histories of Some Flies of the Family Tabanidæ. By James S. Hine, of the Ohio State University, Columbus, Ohio. (Miscellaneous Papers.) Bulletin No. 12, Technical Series, Part II. Pp. iii, 19–38, figs. 12. August 27, 1906. Price 10 cents	2,000
Proceedings of the Eighteenth Annual Meeting of the Association of Economic Entomologists. Pp. 206, pls. 3, figs. 10. Bulletin No. 60. September 20, 1906. Price 20 cents	1,000

	Copies.
List of Publications of the Bureau of Entomology. Pp. 21. Circular No. 76. September 21, 1906	3,000
House Flies. (*Musca domestica* et al.) By L. O. Howard. Pp. 10, figs. 9. Circular No. 71, revised. Reprint, October 1, 1906	2,500
Reprint, March 22, 1907	5,000
Harvest Mites, or "Chiggers." By F. H. Chittenden, Entomologist, in Charge of Breeding Experiments. Pp. 6, figs. 3. Circular No. 77. October 1, 1906	3,000
The Brood Diseases of Bees. By E. F. Phillips, Agricultural Expert. Pp. 5. Circular No. 79. October 6, 1906	5,000
The Slender Seed-Corn Ground-Beetle. (*Clivinia impressifrons* Lec.) By F. M. Webster, in Charge of Cereal and Forage-Plant Insect Investigations. Pp. 6, figs. 2. Circular No. 78. October 4, 1906	3,000
Reprint, December 10, 1906	3,000
Some Observations on the Spined Soldier Bug. (*Podisus Maculiventris* Say.) By A. W. Morrill, Washington, D. C. Pp. 155–161, fig. 1. (From Bulletin No. 60 of the Bureau.) October 16, 1906. Price 20 cents	200
Report of Committee on Nomenclature. (From Bulletin No. 60.) Pp. 25–27. October 16, 1906	500
National Control of Introduced Insect Pests. By E. Dwight Sanderson, Durham, N. H. Pp. 95–104. (From Bulletin No. 60.) October 18, 1906	500
The Corn Root-Aphis and Its Attendant Ant. By S. A. Forbes, Urbana, Ill. Pp. 29–39. (From Bulletin No. 60.) October 18, 1906	200
Sulphur Dioxide as an Insecticide. By C. L. Marlatt, Washington, D. C. Pp. 139–153. (From Bulletin No. 60.) October 19, 1906	500
The Laws in Force Against Injurious Insects and Foul Brood in the United States. Compiled by L. O. Howard, Ph. D., Entomologist, and A. F. Burgess, Secretary of the American Association of Horticultural Inspectors. Pp. 222, Bulletin No. 61. November 2, 1906. Price 25 cents	1,000
The Scope and Status of Economic Entomology. By H. Garman, Lexington, Ky. Pp. 19. (From Bulletin No. 60.) November 6, 1906	100
The Nut Weevils. By F. H. Chittenden, Sc. D., In Charge of Breeding Experiments. Pp. iii, 299–310, pls. 3, figs. 10. (From Yearbook of the Department for 1904.) Reprint, November 6, 1906	500
The Bacteria of the Apiary, with Special Reference to Bee Diseases. By Gersham Franklin White, Ph. D., Expert in Animal Bacteriology, Biochemic Division, Bureau of Animal Industry. Pp. 50. Bulletin No. 14, Technical Series. November 6, 1906. Price 10 cents	2,000
December 7, 1906, Reprint	1,000
State and Territorial Laws Relative to Foul Brood. Pp. 17. (From "The Laws in Force Against Injurious Insects and Foul Brood in the United States.") Bulletin No. 61. November 8, 1906	50
A Revision of the Tyroglyphidæ of the United States. By Nathan Banks, Assistant Entomologist. Pp. 34, pls. 6, figs. 61. Bulletin No. 13, Technical Series. November 10, 1906. Price 10 cents	2,000
The Melon Aphis (*Aphis gossypii* Glov.). By F. H. Chittenden, Entomologist, in Charge of Breeding Experiments. Pp. 16, figs. 6. Circular No. 80. November 14, 1906	3,000
Reprint, February 12, 1907	2,000
Insects Injurious to Forest Products. By A. D. Hopkins. In Charge of Forest Insect Investigations. Pp. ii, 381–398, figs. 14. (From Yearbook of the Department for 1904.) Reprint, November 19, 1906	1,000
Mosquitoes and Fleas. By L. O. Howard, Entomologist. Pp. 4. Circular No. 13. Reprint, November 20, 1906	2,000
Insects Injurious to Beans and Peas. By F. H. Chittenden, Assistant Entomologist. Pp. ii, 233–260, figs. 17. (From Yearbook of the Department for 1898.) Reprint, November 28, 1906	500
The San Jose or Chinese Scale. By C. L. Marlatt. Pp. 89, pls. 9, figs. 12. Bulletin No. 62. December 4, 1906. Price 25 cents	3,000
Smyrna Fig Culture in the United States. By L. O. Howard, Ph. D., Entomologist. Pp. iv., 79–106, pls. 8, figs. 7. (From Yearbook of the Department for 1900.) Reprint, December 8, 1906	500
Report of the Entomologist for 1906. By L. O. Howard. Pp. 36. (From Annual Reports of the Department for 1906.) December 18, 1906	500

	Copies.
The Peach-Tree Borer. (*Sannina exitiosa* Say.) By C. L. Marlatt. Pp. 6, fig. 1. Circular No. 54. Reprint, December 20, 1906	2,500
House Flies. (*Musca domestica* et al.) By L. O. Howard, Entomologist. Pp. 8, figs. 6. Circular No. 35. Reprint, December 20, 1906	250
The Peach-Tree Borer. (*Sannina exitiosa* Say.). By C. L. Marlatt, First Assistant Entomologist. Pp. 4, fig. 1. Circular No. 17. Reprint, December 29, 1906	250
The Imported Elm Leaf-Beetle, *Galerucella luteola* Mull. (*Galeruca xanthomelaena* Schrank.) By C. L. Marlatt, First Assistant Entomologist. Pp. 4. Circular No. 8. Reprint, January 3, 1907	1,000
Pinhole Injury to Girdled Cypress in the South Atlantic and Gulf States. By A. D. Hopkins. Pp. 4. Circular No. 82. January 3, 1907	3,000
Condensed Information Concerning Some of the More Important Insecticides. By C. V. Riley, Entomologist. Pp. 7. Circular No. 1. Reprint, January 4, 1907	250
The Hessian Fly. (*Cecidomyia destructor* Say.) By C. L. Marlatt, First Assistant Entomologist. Pp. 4. Circular No. 12. (Revised.) Reprint, January 11, 1907	250
The Periodical Cicada in 1898. By E. A. Schwarz, Assistant Entomologist. Circular No. 30. Pp. 3. Reprint, January 16, 1907	250
Papers on the Cotton Boll Weevil and Related and Associated Insects. Hibernation and Development of the Cotton Boll Weevil. By E. Dwight Sanderson, formerly State Entomologist of Texas. Bulletin No. 63, Part I. Pp. iv, 38, figs. 6. January 16, 1907. Price 5 cents	3,000
Papers on the Cotton Boll Weevil and Related and Associated Insects. The Strawberry Weevil in the South-Central States in 1905. By A. W. Morrill, Special Field Agent. Pp. iii, 59–62. Bulletin No. 63, Part VI. January 19, 1907. Price 5 cents	2,000
The United States Department of Agriculture and Silk Culture. By L. O. Howard, Ph. D., Entomologist. Pp. iii, 137–148, pls. 6. (From Yearbook of the Department for 1903.) Reprint, January 25, 1907	1,000
Remedial Work Against the Mexican Cotton Boll Weevil. By L. O. Howard, Ph. D., Entomologist. Pp. 6. Circular No. 33. Reprint, January 30, 1907	250
How to Distinguish the Different Mosquitoes of North America. By L. O. Howard, Ph. D., Entomologist. Pp. 7, figs. 3. Circular No. 40. Reprint, February 2, 1907	250
Papers on the Cotton Boll Weevil and Related and Associated Insects. Notes on the Biology of Certain Weevils Related to the Cotton Boll Weevil. By W. Dwight Pierce, Special Field Agent. Pp. 8, pl. 1. Bulletin No. 63, Part II. February 2, 1907. Price 5 cents	3,000
Papers on the Cotton Boll Weevil and Related and Associated Insects. An Ant Enemy of the Cotton Boll Weevil. By W. E. Hinds, in Charge of Cotton Boll Weevil Laboratory. Pp. iii, 45–48, fig. 1. Bulletin No. 63, Part III. February 2, 1907. Price 5 cents	2,000
Der Mexikanische Baumwollkapsel-Rüsselkäfer. (*Anthonomus grandis*). L. O. Howard. Pp. 11, figs. 5. Circular No. 18. Reprint, February 7, 1907	100
Papers on the Cotton Boll Weevil and Related and Associated Insects. A Predatory Bug Reported as an Enemy of the Cotton Boll Weevil. By A. C. Morgan, Special Agent. Pp. iii, 49–54, figs. 3. Bulletin No. 63, Part IV. February 8, 1907. Price 5 cents	2,000
Papers on the Cotton Boll Weevil and Related and Associated Insects. Notes on the Pepper Weevil. By F. C. Pratt, Assistant. Pp. iii, 55–58, pl. 1, fig. 1. Bulletin No. 63, Part V. February 9, 1907. Price 5 cents	2,000
Papers on the Cotton Boll Weevil and Related and Associated Insects. The Cotton Stalk-Borer. By A. C. Morgan, Special Field Agent. Pp. iii, 63–66, pl. 1, fig. 1. Bulletin No. 63, Part VII. February 9, 1907. Price 5 cents	2,000
The Bedbug. (*Cimex lectularius* L.) By C. L. Marlatt, Entomologist and Acting Chief in Absence of Chief. Pp. 8, figs. 3. Circular No. 47, revised. Reprint, February 26, 1907	3,000
The Locust Borer and Methods for Its Control. By A. D. Hopkins. In Charge of Forest-Insect Investigations. Pp. 8, figs. 4. Circular No. 83. March 2, 1907	3,000

	Copies.
Some Insects Injurious to Forests. Additional Data on the Locust Borer. By A. D. Hopkins, in Charge of Forest Insect Investigations. Pp. iii, 31–40. Bulletin No. 58, Part III. March 5, 1907. Price 5 cents	2,000
The Mexican Cotton Boll Weevil. (*Anthonomus grandis* Boh). L. O. Howard, Entomologist. Pp. 8, figs. 5. Circular No. 14. Reprint, March 5, 1907	300
The Aphides Affecting the Apple. By A. L. Quaintance, in Charge of Deciduous-Fruit Insect Investigations. Pp. 10, figs. 8. Circular No. 81. March 11, 1907	3,000
Reprint, May 17, 1907	5,000
How to Control the San Jose Scale. By C. L. Marlatt, Entomologist and Acting Chief in Absence of Chief. Pp. 8. Circular No. 42. Fourth Edition. Reprint, March 14, 1907	5,000
Some Insects Injurious to Truck Crops. The Asparagus Miner. Notes on the Asparagus Beetles. By F. H. Chittenden, Entomologist in Charge of Breeding Experiments. Pp. 13, figs. 2. Bulletin No. 66, Part 1. March 16, 1907. Price 5 cents	2,000
The Spring Grain-Aphis. (*Toxoptera graminum* Rond). By F. M. Webster, in Charge of Cereal and Forage-Plant Insect Investigations. Pp. 7, figs. 3. Circular No. 85. March 30, 1907	3,000
Reprint, May 29, 1907	2,000
Some Miscellaneous Results of the Work of the Bureau of Entomology. IX.—Notes on "Punkies," by F. C. Pratt, Special Field Agent. Pp. 8, figs. 4. Bulletin No. 64, Part III. April 1, 1907. Price 5 cents	2,000
Some Miscellaneous Results of the Work of the Bureau of Entomology. IX.—The Mexican Conchuela in Western Texas in 1905. By A. W. Morrill, Special Field Agent. Pp. 16, pl. 1, figs. 2. Bulletin No. 64, Part I. April 3, 1907. Price 5 cents	2,000
Some Miscellaneous Results of the Work of the Bureau of Entomology. IX.—Notes on the Economic Importance of Sowbugs. By W. Dwight Pierce, Special Field Agent. Pp. iii, 15–22, Pl. II. Bulletin No. 64, Part II. April 3, 1907. Price 5 cents	2,000
Miscellaneous Papers. A Contribution to our Knowledge of the Thysanoptera of California. By Dudley Moulton, engaged in Deciduous-Fruit Insect Investigations. Pp. vi, 39–68, pls. 6. Bulletin No. 12, Technical Series, Part III. April 5, 1907	2,000
The Grasshopper Problem and Alfalfa Culture. By F. M. Webster, In Charge of Cereal and Forage-Plant Insect Investigations. Pp. 10, figs. 8. Circular No. 84. April 8, 1907	3,000
The Plum Curculio (*Conotrachelus nenuphar* Herbst.). By Fred Johnson and A. A. Girault, engaged in Deciduous-Fruit Insect Investigations. Pp. 10, figs. 5. Circular No. 73. Reprint, April 20, 1907	3,000
The Tobacco Thrips, A New and Destructive Enemy of Shade-Grown Tobacco. By W. A. Hooker, Special Field Agent. Pp. 24, pls. 2, figs. 2. Bulletin No. 65. April 22, 1907. Price 10 cents	3,000
Some Insects Injurious to Truck Crops. The Water-Cress Sowbug. The Water-Cress Leaf-Beetle. By F. H. Chittenden, Entomologist in Charge of Breeding Experiments. Pp. 13, figs. 5. Bulletin No. 66, Part II. April 24, 1907. Price 5 cents	2,000
The Corn Leaf-Aphis and Corn Root-Aphis. By F. M. Webster, In Charge of Cereal and Forage-Plant Insect Investigations. Pp. 13. Circular No. 86. May 7, 1907	3,000
The Terrapin Scale (*Eulecanium nigrofasciatum* Pergande). By J. G. Sanders, Assistant. Pp. 4, figs. 3. Circular No. 88. May 14, 1907	3,000
The Periodical Cicada in 1907 (*Tibicen septendecim* L., race tredecim Walsh-Riley). By C. L. Marlatt. Pp. 4, figs. 3. Circular No. 89. May 17, 1907	12,500
The Colorado Potato Beetle (*Leptinotarsa decemlineata* Say). By F. H. Chittenden, Entomologist in Charge of Breeding Experiments. Pp. 15, figs. 6. Circular No. 87. June 3, 1907	3,000
Papers on Deciduous-Fruit Insects and Insecticides. The Pear Thrips. By Dudley Moulton, engaged in Deciduous-Fruit Insect Investigations. Pp. 20, pls. 2, figs. 8. Bulletin No. 68, Part I. June 8, 1907. Price 10 cents	2,000

	Copies.
Report of the Meeting of Inspectors of Apiaries, San Antonio, Texas, November 12, 1906. Pp. 79, pl. 1, frontispiece. Bulletin No. 70. June 19, 1907. Price 5 cents	3,000
The White Pine Weevil. By A. D. Hopkins, in Charge of Forest-Insect Investigations. Pp. 8, figs. 6. Circular No. 90. June 21, 1907	3,000
The Chinch Bug. By F. M. Webster, in Charge of Cereal and Forage-Plant Insect Investigations. Pp. 95, figs. 19. Bulletin No. 69. June 21, 1907. Price 15 cents	3,000
The Principal Insect Enemies of Growing Wheat. By C. L. Marlatt, M. S., First Assistant Entomologist. Pp. 40, figs. 25. Farmers' Bulletin No. 132. Reprint, August 21, 1906	10,000
Reprint, April 13, 1907	10,000
Silkworm Culture. By Henrietta Aiken Kelly, Special Agent in Silk Investigations. (Revised by C. J. Gilliss.) Pp. 32, figs. 15. Farmers' Bulletin No. 165. Reprint, September 10, 1906	10,000
Controlling the Boll Weevil in Cotton Seed and at Ginneries. By W. D. Hunter, Special Agent in Charge of Cotton Boll Weevil Investigations. Pp. 32, fig. 1. Bulletin No. 209. Reprint, September 20, 1906.	5.000
Reprint, March 23, 1907	5,000
The Control of the Boll Weevil, including Results of Recent Investigations. By W. D. Hunter, Special Agent in Charge of Cotton Boll Weevil Investigations. Pp. 32, figs. 5. Reprint, Farmers' Bulletin No. 216. September 25, 1906	5,000
Reprint, November 21, 1906	10,000
Reprint, March 23, 1907	10,000
Bee Keeping. By Frank Benton, M. S., in Charge of Apicultural Investigations. (Revised, March, 1905.) Pp. 48, figs. 19. Farmers' Bulletin No. 59. Reprint, October 10, 1906	15,000
Reprint, April 23, 1907	10,000
The Principal Insects Affecting the Tobacco Plant. By L. O. Howard, Entomologist. Pp. 32, figs. 25. Farmers' Bulletin No. 120. Reprint, October 15, 1906	5,000
Reprint, March 27, 1907	10,000
Reprint, June 12, 1907	10,000
The Brown-tail Moth and How to Control it. By L. O. Howard, Entomologist. Pp. 24, figs. 10. Farmers' Bulletin No. 264. October 20, 1906	15,000
The Principal Insect Enemies of the Grape. By C. L. Marlatt, M. S., First Assistant Entomologist. Pp. 24, figs. 12. Farmers' Bulletin No. 70. Reprint, October 23, 1906	5,000
Three Insect Enemies of Shade Trees. By L. O. Howard, Entomologist. Pp. 32, figs. 11. Farmers' Bulletin No. 99. Reprint, October 25, 1906	5,000
Reprint, March 28, 1907	5,000
Reprint, June 29, 1907	5,000
Usefulness of the American Toad. By A. H. Kirkland, M. S. Pp. 16. Farmers' Bulletin No. 196. Reprint, October 30, 1906	5,000
Reprint, April 3, 1907	5,000
How Insects Affect Health in Rural Districts. By L. O. Howard, Entomologist. Pp. 20, figs. 16. Farmers' Bulletin No. 155. Reprint, October 31, 1906	10,000
Reprint, April 25, 1907	5,000
Important Insecticides: Directions for Their Preparation and Use. (Revised, August, 1903.) By C. L. Marlatt. Pp. 46, figs. 6. Farmers' Bulletin No. 127. Reprint, November 2, 1906	5,000
Reprint, April 5, 1907	5,000
Reprint, June 29, 1907	5,000
The Peach Twig-Borer: An Enemy of Stone Fruits. By C. L. Marlatt, M. S., First Assistant Entomologist. Pp. 16, figs. 5. Farmers' Bulletin No. 80. Reprint, November 24, 1906	5,000
Reprint, April 11, 1907	5,000
The Gipsy Moth and How to Control It. By L. O. Howard, Entomologist. Pp. 24, figs. 7. Farmers' Bulletin No. 275. January 21, 1907	30,000

	Copies.
Carbon Bisulphid as an Insecticide. By W. E. Hinds, Temporary Assistant of the Division of Entomology. Pp. 30. Farmers' Bulletin No. 145. January 29, 1907. Reprint	5,000
Reprint, April 27, 1907	5,000
Insects Affecting the Cotton Plant. By L. O. Howard, Ph. D., Entomologist. Pp. 32, figs. 18. Farmers' Bulletin No. 47. March 26, 1907. Reprint	10,000
Orchard Enemies in the Pacific Northwest. By C. V. Piper, State Agricultural College, Pullman, Washington. Pp. 40, fig. 1. Farmers' Bulletin No. 153. Reprint, April 25, 1907	5,000
Spraying for Apple Diseases and the Codling Moth in the Ozarks. By W. M. Scott, of the Bureau of Plant Industry, and A. L. Quaintance, of the Bureau of Entomology. Pp. 44, figs. 7. Farmers' Bulletin No. 283. May 2, 1907	20,000
Reprint, May 23, 1907	15,000
The Cotton Bollworm: A Summary of Its Life History and Habits, with Some Results of Investigations in 1905 and 1906. By F. C. Bishopp and C. R. Jones, of the Bureau of Entomology. Pp. 32, figs. 4. Farmers' Bulletin No. 290. May 11, 1907	30,000

OFFICE OF EXPERIMENT STATIONS.

Experiment Station Record. (A condensed record of the bulletins and reports issued by the Agricultural Experiment Stations of the United States, also a brief review of agricultural science of the world.)

	Copies.
Vol. V, No. 1. Pp. viii, 1–138. Reprint	400
Vol. V, No. 2. Pp. viii, 139–268. Reprint	375
Vol. V, No. 3. Pp. vii, 269–358. Reprint	325
Vol. V, No. 4. Pp. vi, 359–452. Reprint	500
Vol. V, No. 5. Pp. 453–546. Reprint	400
Vol. V, No. 6. Pp. viii, 547–666. Reprint	325
Vol. V, No. 7. Pp. vi, 667–744. Reprint	425
Vol. V, No. 8. Pp. vi, 745–830. Reprint	475
Vol. V, No. 9. Pp. vii, 831–940. Reprint	475
Vol. V, No. 10. Pp. vii, 941–1040. Reprint	500
Vol. V, No. 11. Pp. v, 1041–1106. Reprint	350
Vol. V, No. 12. Pp. xxxiv, 1107–1227. Reprint	100
Vol. VI, No. 1. Pp. vi, 1–88. Reprint	350
Vol. VI, No. 2. Pp. vi, 89–174. Reprint	325
Vol. VI, No. 3. Pp. v, 175–254. Reprint	75
Vol. VI, No. 4. Pp. vi, 255–348. Reprint	400
Vol. VI, No. 5. Pp. viii, 349–488. Reprint	300
Vol. VI, No. 6. Pp. vii, 489–584. Reprint	375
Vol. VI, No. 7. Pp. vi, 585–678. Reprint	300
Vol. VI, No. 8. Pp. v, 679–758. Reprint	300
Vol. VI, No. 9. Pp. vi, 759–850. Reprint	450
Vol. VI, No. 10. Pp. vi, 851–944. Reprint	275
Vol. VI, No. 11. Pp. vi, 945–1032. Reprint	275
Vol. VI, No. 12. Pp. xii, 1033–1134. Reprint	500
Vol. VII, No. 4. Pp. v, 261–342. Reprint	200
Vol. VII, No. 5. Pp. v, 343–434. Reprint	375
Vol. VII, No. 6. Pp. vi, 435–534. Reprint	450
Vol. VII, No. 7. Pp. v, 535–632. Reprint	175
Vol. VII, No. 8. Pp. v, 633–722. Reprint	475
Vol. VII, No. 9. Pp. v, 723–814. Reprint	425
Vol. VII, No. 10. Pp. vi, 815–901. Reprint	500
Vol. VII, No. 11. Pp. vi, 903–996. Reprint	500
Vol. VII, No. 12. Pp. vi, 997–1092. Reprint	500
Vol. VIII, No. 1. Pp. vi, 1–94. Reprint	425
Vol. VIII, No. 2. Pp. vii, 95–176. Reprint	375
Vol. VIII, No. 3. Pp. vi, 177–268. Reprint	425
Vol. VIII, No. 4. Pp. vii, 269–354. Reprint	375
Vol. VIII, No. 5. Pp. vi, 355–444. Reprint	375
Vol. VIII, No. 6. Pp. vi, 445–538. Reprint	400
Vol. VIII, No. 7. Pp. vi, 539–638. Reprint	375

	Copies.
Experiment Station Record—Continued.	
Vol. VIII, No. 8. Pp. v, 639–738. Reprint	375
Vol. VIII, No. 9. Pp. vii, 739–838. Reprint	375
Vol. VIII, No. 10. Pp. v, 839–938. Reprint	400
Vol. VIII, No. 11. Pp. vi, 939–1036. Reprint	375
Vol. IX, No. 1. Pp. iv, 1–100. Reprint	500
Vol. IX, No. 2. Pp. vi, 101–200. Reprint	500
Vol. IX, No. 3. Pp. vi, 201–300. Reprint	150
Vol. IX, No. 4. Pp. vii, 301–400. Reprint	250
Vol. IX, No. 5. Pp. v, 401–500. Reprint	200
Vol. IX, No. 6. Pp. v, 501–600. Reprint	225
Vol. IX, No. 8. Pp. vi, 701–800. Reprint	50
Vol. IX, No. 9. Pp. vii, 801–900. Reprint	175
Vol. IX, No. 10. Pp. v, 901–1000. Reprint	200
Vol. IX, No. 11. Pp. v, 1001–1100. Reprint	275
Vol. IX, No. 12. Pp. 1101–1198, xvi. Reprint	400
Vol. X, No. 1. Pp. v, 1–100. Reprint	475
Vol. X, No. 2. Pp. vi, 101–200. Reprint	450
Vol. X, No. 3. Pp. vi, 201–300. Reprint	500
Vol. X, No. 4. Pp. viii, 301–400. Reprint	300
Vol. X, No. 5. Pp. vi, 401–500. Reprint	500
Vol. X, No. 6. Pp. vi, 501–600. Reprint	400
Vol. X, No. 7. Pp. vii, 601–700. Reprint	450
Vol. X, No. 8. Pp. vi, 701–800. Reprint	450
Vol. X, No. 9. Pp. vi, 801–900. Reprint	500
Vol. X, No. 10. Pp. vi, 901–1000. Reprint	475
Vol. X, No. 11. Pp. vi, 1001–1100. Reprint	500
Vol. X, No. 12. Pp. 1101–1208, xvi. Reprint	25
Vol. XI, No. 1. Pp. vi, 1–100. Reprint	500
Vol. XI, No. 2. Pp. vii, 101–200. Reprint	500
Vol. XI, No. 4. Pp. vii, 301–400. Reprint	75
Vol. XI, No. 5. Pp. vi, 401–500. Reprint	75
Vol. XI, No. 6. Pp. v, 501–600. Reprint	125
Vol. XI, No. 7. Pp. v, 601–700. Reprint	100
Vol. XI, No. 8. Pp. v, 701–800. Reprint	125
Vol. XI, No. 9. Pp. vi, 801–900. Reprint	100
Vol. XI, No. 10. Pp. vi, 901–1000. Reprint	100
Vol. XI, No. 11. Pp. vii, 1001–1100. Reprint	275
Vol. XI, No. 12. Pp. 1101–1208, xvi. Reprint	425
Vol. XII, No. 1. Pp. vi, 1–100. Reprint	100
Vol. XII, No. 3. Pp. viii, 201–300. Reprint	175
Vol. XII, No. 4. Pp. vi, 301–400. Reprint	225
Vol. XII, No. 5. Pp. vi, 401–500. Reprint	50
Vol. XII, No. 6. Pp. vi, 501–600. Reprint	275
Vol. XII, No. 7. Pp. vi, 601–700. Reprint	225
Vol. XII, No. 8. Pp. vi, 701–800. Reprint	325
Vol. XII, No. 9. Pp. vii, 801–900. Reprint	250
Vol. XII, No. 10. Pp. vii, 901–1000. Reprint	200
Vol. XII, No. 11. Pp. vii, 1001–1100. Reprint	275
Vol. XII, No. 12. Pp. xvi, 1101–1189. Reprint	275
Vol. XVII, No. 10. Pp. ix, 929–1028, June, 1906	6,500
Vol. XVII, No. 11. Pp. x, 1029–1128, July, 1906	6,500
Vol. XVII, No. 12. Pp. viii, 1129–1227, August, 1906	6,500
Vol. XVIII, No. 1. Pp. x, 1–100, September, 1906	6,500
Vol. XVII. Pp. xx, 1229–1317	6,500
Vol. XVIII, No. 2. Pp. viii, 101–200, October, 1906	6,500
Vol. XVIII, No. 3. Pp. viii, 201–300, November, 1906	6,500
Vol. XVIII, No. 4. Pp. ix, 301–400, December, 1906	6,500
Vol. XVIII, No. 5. Pp. viii, 401–500, January, 1907	6,500
Vol. XVIII, No. 6. Pp. viii, 501–600, February, 1907	6,500
Vol. 2, No. 4. Pp. v, 139–184, November, 1890. Reprint	325
Vol. XVIII, No. 7. Pp. viii, 601–700, March, 1907	6,500
Vol. XVIII, No. 8. Pp. x, 701–800, April, 1907	6,500
Vol. XVIII, No. 9. Pp. viii, 801–900, May, 1907	6,500
Dietary Studies of Groups, Especially in Public Institutions. By C. F. *Langworthy*, Food and Nutrition Expert. Pp. iii, 387–416. (From *Annual Report* of the Office for 1902.) Reprint, July 2, 1908	500

	Copies.
A Digest of Metabolism Experiments in Which the Balance of Income and Outgo was Determined. By W. O. Atwater, Ph. D., and C. F. Langworthy, Ph. D. Pp. 434. Bulletin No. 45, revised. Reprint, July 6, 1906. Price 25 cents	250
Irrigation in the North Atlantic States. By Aug. J. Bowie, Jr., Agent and Expert. Pp. 50, figs. 7. Bulletin No. 167. July 10, 1906. Price 10 cents	5,000
Fruit and Its Uses as Food. By C. F. Langworthy, of the Office of Experiment Stations. Pp. ii, 307–324, fig. 1. (From Yearbook of the Department for 1905.) July 12, 1906	2,500
Vegetable Growing in Porto Rico. By H. C. Henricksen, Horticulturist, Porto Rico Agricultural Experiment Station. Pp. 58, pls. 10, figs. 2. Bulletin No. 7 of Porto Rico Agricultural Experiment Station. July 13, 1906. Price 15 cents	3,000
Experiments on the Metabolism of Matter and Energy in the Human Body, 1900–1902. By W. O. Atwater, Ph. D., and F. G. Benedict, Ph. D., with the cooperation of A. P. Bryant, M. S., R. D. Milner, Ph. D., and Paul Murrill, Ph. D. Pp. 357, frontispiece, figs. 14. Bulletin No. 136. Reprint, July 17, 1906. Price 30 cents	250
The Use of Illustrative Material in Teaching Agriculture in Rural Schools. By Dick J. Crosby. Pp. ii, 257–274, pls. 3, figs. 10. (From Yearbook of the Department for 1905.) July 18, 1906	5,000
Irrigation from Snake River, Idaho. By H. G. Raschbacher, Irrigation Engineer. Pp. 16, fig. 1. Circular No. 65. July 18, 1906	2,000
Some Ways in Which the Department of Agriculture and the Experiment Stations Supplement Each Other. By E. W. Allen, Assistant Director of the Office of Experiment Stations. Pp. iii, 167–182. (From Yearbook of the Department for 1905.) July 18, 1906	500
The Relation of Irrigation to Dry Farming. By Elwood Mead, Chief of Irrigation and Drainage Investigations. Pp. iv, 423–438, pls. 2, figs. 10. (From Yearbook of the Department for 1905.) July 18, 1906	1,000
Reprint, January 19, 1907	500
Report on Agricultural Investigations in Hawaii, 1905. By Jared G. Smith, Special Agent in Charge of Hawaii Agricultural Experiment Station. Pp. 66, pls. 4. Bulletin No. 170. July 21, 1906. Price 15 cents	5,000
Investigations of Irrigation Practice in Oregon. By A. P. Stover, Irrigation Engineer. Pp. 30, figs. 4. Circular No. 67. July 24, 1906	3,000
Report of Drainage Investigations, 1904. By C. G. Elliott, Engineer in Charge Drainage Investigations. Pp. v, 643–743, pls. 4, figs. 23. Separate No. 9, from Bulletin 158. July 26, 1906	3,000
Report on Agricultural Investigations in Porto Rico, 1905. By D. W. May, Special Agent in Charge Porto Rico Agricultural Experiment Station. Pp. 47, pls. 7. Bulletin No. 171. July 26, 1906. Price 10 cents	5,000
Experiment Station Work, Vol. 2, No. 15. Compiled from the Publications of the Agricultural Experiment Stations. Pp. iv, 393–420. July 31, 1906	3,000
Report on Agricultural Investigations in Alaska, 1905. By C. C. Georgeson, M. S., Special Agent in Charge of Alaska Experiment Stations. Pp. 100, pls. 8, fig. 1. Bulletin No. 169. August 2, 1906. Price 20 cents	5,000
Illustrations of the Influence of Experiment Station Work on Culture of Field Crops. By J. I. Schulte. Pp. iii, 407–422, fig. 1. (From Yearbook of the Department for 1905.) August 3, 1906	500
The State Engineer and His Relation to Irrigation. By R. P. Teele, Expert in Irrigation Institutions. Pp. 99, fig. 1. Bulletin No. 168. August 3, 1906. Price 15 cents	3,000
Irrigation in the Valley of Lost River, Idaho. By Albert Eugene Wright, Agent and Expert. Pp. 24. Circular No. 58. Reprint, August 15, 1906	500
Irrigation in Montana. By Samuel Fortier, Assisted by A. P. Stover and J. S. Baker. Pp. 108, figs. 18. Bulletin No. 172. September 8, 1906. Price 15 cents	1,000
Reprint, December 10, 1906	2,000

	Copies.
Irrigation in Southern Texas. Aug. J. Bowie, Jr., Agent and Expert in Pumping Investigations. Pp. iv, 347–507, pls. 3, figs. 19. Separate No. 6, from Bulletin No. 158. Reprint, September 25, 1906	1,000
Reprint, September 28, 1906	100
Experiment Station Work, Vol. 2, No. 16. Compiled from the Publications of the Agricultural Experiment Stations. Pp. iv, 421–448. September 27, 1906	3,000
A Conception of Agricultural Research. Pp. 929–933. (From Experiment Station Record, Vol. XVII, No. 10.) October 2, 1906	500
Annual Report of Office of Experiment Stations, 1905. Pp. 413, pls. 11. October 11, 1906. Price 50 cents	5,000
Federal Legislation, Regulations, and Rulings Affecting Agricultural Colleges and Experiment Stations. Pp. 21. Circular No. 68. November 8, 1906	1,000
The Farmers' Institutes in the United States, 1905. By John Hamilton, Farmers' Institute Specialist. Pp. iii, 359–413. (From Annual Report of the Office of Experiment Stations for 1905.) November 8, 1906	3,500
Statistics of Land-Grant Colleges and Agricultural Experiment Stations, 1905. Compiled by Miss M. T. Spethmann. Pp. iii, 153–186. (From Annual Report of the Office of Experiment Stations for 1905.) November 9, 1906	500
Progress in Agricultural Education, 1905. By A. C. True, Director of the Office of Experiment Stations. Pp. ii, 303–357. (From Annual Report of the Office of Experiment Stations for the year ended June 30, 1905.) November 10, 1906	3,000
Some Experiment Station Work Relating to the Food and Nutrition of Man. By R. D. Milner, Editorial Assistant in Nutrition Investigations. Pp. ii, 225–237. (From Annual Report of the Office of Experiment Stations for 1905.) November 15, 1906	500
Drainage Investigations. By C. G. Elliott, Engineer in Charge of Drainage Investigations. Pp. 197–210. (From Annual Report of the Office of Experiment Stations for 1905.) November 15, 1906	1,000
The Individual as a Factor in Agricultural Research. Pp. 6. (From Experiment Station Record, Vol. XVIII, No. 1.) November 15, 1906	500
The Value of Potatoes as Food. By C. F. Langworthy, Ph. D., Office of Experiment Stations. Pp. iii, 337–348. (From Yearbook of the Department for 1900.) Reprint, November 15, 1906	200
The Evolution of Farm-Implement Investigations. C. J. Zintheo, in Charge of Farm-Machinery Investigations. Pp. ii, 211–223. (From Annual Report of the Office of Experiment Stations for 1905.) November 17, 1906	2,000
List of State Directors of Farmers' Institutes and Farmers' Institute Lecturers of the United States. By John Hamilton, Farmers' Institute Specialist. Revised September 1, 1906. Pp. 32. Circular No. 51. November 17, 1906	2,500
Some Results of Experiment Station Work with Insecticides. By E. V. Wilcox, Office of Experiment Stations. Pp. iii, 239–280 (From Annual Report of the Office of Experiment Stations for 1905.) November 19, 1906	200
Experiments on the Metabolism of Nitrogen, Sulphur, and Phosphorus in the Human Organism. By H. C. Sherman, Ph. D., Instructor in Analytical Chemistry, Columbia University. Conducted in Cooperation with Columbia University. Pp. 47, figs. 3. Bulletin No. 121. Reprint, November 19, 1906. Price 5 cents	200
Some Experiment Station Work Relating to the Production and Sale of Pure Milk. By H. W. Lawson. (From Annual Reports, Office of Experiment Stations for 1905.) Pp. ii, 281–301. November 19, 1906	200
Boys' Agricultural Clubs. By Dick J. Crosby. Pp. v, 489–496, pls. 3. (From Yearbook of the Department for 1904.) Reprint, November 21, 1906	500
Studies on the Influence of Cooking Upon the Nutritive Value of Meats at the University of Illinois, 1903–4. By H. S. Grindley, Sc. D., Professor of General Chemistry, and A. D. Emmett, A. M., Research Chemist, University of Illinois. Pp. 230. Bulletin No. 162. Reprint, November 23, 1906. Price 20 cents	1,000

	Copies.
Experiment Station Work, Vol. 2, No. 17. Compiled from the Publications of the Agricultural Experiment Stations. Pp. iv, 449–476, fig. 1. November 23, 1906	3,000
Summary of Annual Report, and Work and Expenditures for the Agricultural Experiment Stations for the year ended June 30, 1905. Pp. v, 13–151, pls. 6. (From Annual Report of the Office of Experiment Stations for 1905.) November 30, 1906	1,000
The Functions and Uses of Food. By C. F. Langworthy, Ph. D. Pp. 11. Circular No. 46, revised. December 10, 1906	1,000
Reprint, April 27, 1907	2,500
A Four Years' Course in Agriculture. Pp. 36. Circular No. 69. December 10, 1906	1,000
Reprint, March 2, 1907	1,000
Rules and Apparatus for Seed Testing. Adopted by the Standing Committee on Methods of Seed Testing of the Association of American Agricultural Colleges and Experiment Stations. (Corrected November 7, 1906.) Pp. 24, figs. 11. Circular No. 34, revised. December 11, 1906	500
Reprint, February 14, 1907	500
Reprint, April 18, 1907	2,000
The Card Index of Experiment Station Literature. Circular No. 47, revised. A. C. True, Director. Pp. 2. December 14, 1906	100
The Teaching of Agriculture in the Rural Common Schools. Pp. 20. Circular No. 60. Reprint, December 18, 1906	1,000
Reprint, March 8, 1907	2,000
History of Farmers' Institutes in the United States. Compiled by John Hamilton, Farmers' Institute Specialist. Pp. 96. Bulletin No. 174. December 18, 1906. Price 15 cents	5,000
Report of the Director of the Office of Experiment Stations for 1906. By A. C. True. Pp. 63. (From Annual Reports of the Department for 1906.) December 18, 1906	2,500
Fertilizers. By D. W. May, Special Agent in Charge. Pp. 16. Circular No. 6, Porto Rico Agricultural Experiment Station. December 22, 1906	2,000
Corn-Harvesting Machinery. By C. J. Zintheo, Expert in Farm Mechanics. Bulletin No. 173. Pp. 48. January 4, 1907. Price 10 cents	6,000
Publications of the Office of Experiment Stations from Its Organization to June 30, 1906. Pp. 12. Circular No. 70. January 4, 1907	1,000
Report of Committee on Experiment Station Organization and Policy. Pp. 7. Circular No. 71. January 10, 1907	3,000
Irrigation in Santa Clara Valley, California. By S. Fortier, Irrigation Engineer in Charge of Pacific District. Mechanical Tests of Pumping Plants Used for Irrigation. By J. N. LeConte, Expert in Pumping. Pp. iv, 77–255, figs. 39. Separate No. 2, from Bulletin No. 158. Reprint, January 12, 1907	1,000
Experiment Station Work Vol. 2, No. 18. Compiled from the Publications of the Agricultural Experiment Stations. Pp. iv, 477–504, figs. 91–94. January 19, 1907	3,000
Report of Committee on Extension Work. Pp. 8. Circular No. 72. January 19, 1907	12,000
Organization Lists of the Agricultural Colleges and Experiment Stations in the United States, December, 1906. Pp. 100. Bulletin No. 176. January 25, 1907. Price 15 cents	3,500
The Distribution and Use of Water in Modesto and Turlock Irrigation Districts, California. By Frank Adams, Irrigation Engineer. Relation of Irrigation to Yield, Size, Quality, and Commercial Suitability of Fruits. By E. J. Wickson, Horticulturist of the California Agricultural Experiment Station. Irrigation Conditions in Imperial Valley, California. By J. E. Roadhouse, Agent and Expert. Separate No. 3, from Bulletin 158. Pp. iv, 93–194, pls. 4, figs. 6. Reprint, January 29, 1907	2,000
Evaporation Losses in Irrigation and Water Requirements of Crops. By Samuel Fortier, Irrigation Engineer in charge of Pacific District Irrigation and Drainage Investigations. Pp. 64, pls. 2, figs. 19. Bulletin No. 177. January 31, 1907. Price 10 cents	8,000

	Copies.
Country Life Education. Address of W. M. Hays, Assistant Secretary of Agriculture, before the Pennsylvania State Board of Agriculture, January 23, 1907. Pp. 13. Circular No. 73. February 6, 1907	5,000
Reprint, May 29, 1907	3,000
Egyptian Irrigation: A study of Irrigation Methods and Administration in Egypt. By Clarence T. Johnston, Assistant Chief, Irrigation Investigations. Pp. 100, frontispiece, pls. 24, figs. 9. Bulletin No. 130. Reprint, February 20, 1907. Price 30 cents	500
El Cultivo de Legumbres en Puerto Rico por H. C. Henricksen, Horticulturista, Estación de Experimentos Agriculturales de Puerto Rico. Pp. 64, pls. 10, figs. 2. Boletín No. 7. February 25, 1907. Price 15 cents	3,000
List of Publications of the Agricultural Experiment Stations in the United States (to June 30, 1906). Pp. 104. Bulletin No. 180. March 15, 1907. Price 15 cents	1,000
Small Reservoirs in Wyoming, Montana, and South Dakota. By F. C. Herrmann, Irrigation Engineer. Pp. 100, pls. 8, text figures 13. Bulletin No. 179. March 26, 1907. Price 20 cents	6,000
Problems of Animal Nutrition. By Henry Prentiss Armsby, L. L. D., Director Pennsylvania Experiment Station. Pp. 508–521. (From Experiment Station Record, Vol. XVIII, No. 6.) March 28, 1907	300
Experiment Station Work, Vol. 2, No. 19. Compiled from the Publications of the Agricultural Experiment Stations. Pp. iv, 505–532, figs. 95–96. A. C. True, Director. March 20, 1907	3,000
Proceedings of the Eleventh Annual Meeting of the American Association of Farmers' Institute Workers, held at Baton Rouge, La., November 12–14, 1906. Edited by W. H. Beal, for the Office of Experiment Stations, and John Hamilton for the Association. Pp. 90. Bulletin No. 182. April 5, 1907. Price, 10 cents	5,000
Secondary Course in Agriculture. Pp. 10. Circular No. 49. Reprint, April 9, 1907	1,500
Mechanical Tests of Pumps and Pumping Plants. Used for Irrigation and Drainage in Louisiana in 1905 and 1906. By W. B. Gregory, Professor of Experimental Engineering, Tulane University of Louisiana. Pp. 72, figs. 4. Bulletin No. 183. April 15, 1907. Price 10 cents	5,000
County Schools of Agriculture in Wisconsin. By K. C. Davis, Principal of the Dunn County School of Agriculture, Menomonie, Wis. Pp. iv, 677–686, pls. xxxi–xxxiv. (From Annual Report of the Office of Experiment Stations for 1904.) Reprint, April 16, 1907	200
Haymaking at Kenai Experiment Station. By P. H. Ross, Assistant at Kenai Station. Pp. 13, pl. 1. Bulletin No. 3, Alaska Agricultural Experiment Station. April 18, 1907. Price 5 cents	2,100
Annual Report of the Porto Rico Agricultural Experiment Station for 1906. Pp. 32, pls. 3. Porto Rico Agricultural Experiment Station. April 18, 1907	5,000
Proceedings of the Twentieth Annual Convention of the Association of American Agricultural Colleges and Experiment Stations, held at Baton Rouge, La., November 14–16, 1906. Edited by A. C. True and W. H. Beal, for the Office of Experiment Stations, and H. C. White, for the Executive Committee of the Association. Pp. 132, fig. 1. Bulletin No. 184. April 18, 1907. Price 20 cents	1,000
Experiment Station Work, Vol. 2, No. 20. Compiled from the Publications of the Agricultural Experiment Stations. Pp. iii, 533–560. April 25, 1907	3,000
Course in Fruit Growing for Movable Schools of Agriculture. By Samuel B. Green, B. S., Professor of Horticulture, Minnesota College of Agriculture. Pp. 100. Bulletin No. 178. April 30, 1907. Price 15 cents	5,000
Memorial to Henry Cullen Adams. By W. A. Henry, D. Agr. D. Sc., Director of the Wisconsin Agricultural Experiment Station. Pp. 36–40. (From Bulletin No. 184, Proceedings of the A. A. A. and E. S.) May 2, 1907	100

	Copies.
Memorial to President George W. Atherton. By H. P. Armsby, Ph. D., L.L. D., Director of the Pennsylvania Agricultural Experiment Station. Pp. 8. (From Bulletin No. 184, Proceedings of the A. A. A. and E. S.) May 3, 1907	100
Reprint, June 20, 1907	100
Report of Bibliographer. Books by Agricultural College and Experiment Station Officers. By A. C. True, Ph. D., Director of Office of Experiment Stations. Pp. 21–30. (From Bulletin No. 184, Proceedings of the A. A. A. and E. S.) May 4, 1907	500
Annual Address of the President of the Association. By M. H. Buckham, D. D., LL. D., President of the University of Vermont. Pp. 40–46. (From Bulletin No. 184, Proceedings of the A. A. A. and E. S.) May 4, 1907	300
Exercises in Elementary Agriculture. Plant Production. By Dick J. Crosby. Pp. 64, figs. 40. Bulletin No. 186. May 23, 1907	7,000
Iron in Food and Its Functions in Nutrition. By H. C. Sherman, Ph. D., Professor of Organic Analysis, Columbia University. Pp. 80. Bulletin No. 185. May 25, 1907	1,000
Irrigation Practice among Fruit Growers on the Pacific Coast. By E. J. Wickson, M. A., Professor of Agricultural Practice, University of California, and Horticulturist of the California Agricultural Experiment Station. Pp. 54, pls. 10, figs. 7. Bulletin No. 108. Reprint, June 3, 1907. Price 15 cents	2,000
Irrigation Investigations at New Mexico Experiment Station, Mesilla Park, 1904. By J. J. Vernon, Professor of Agriculture, New Mexico Agricultural College. Irrigation Investigations in Western Texas. By Harvey Culbertson, Agent and Expert in Pumping Investigations. Pumping Plants in Texas. By C. E. Tait, Irrigation Engineer. Pp. iv, 303–346, figs. 41–48. Separate No. 5, from Bulletin No. 158. Reprint, June 7, 1907	500
Annual Report of Alaska Agricultural Experiment Stations for 1906. Pp. 75, pls. 10. By C. C. Georgeson, Special Agent in Charge. June 10, 1907	5,000
Fertilizadores ó Abonos, Por D. W. May, Agente Especial Encargado, Estación de Experimentos Agrícolas de Puerto Rico. Pp. 18. Circular No. 6. June 10, 1907	3,000
Studies on the Digestibility and Nutritive Value of Legumes at the University of Tennessee, 1901–1905. By Chas. E. Watt, Ph. D., F. C. S., Professor of Chemistry, University of Tennessee. Pp. 55. Bulletin No. 187. June 10, 1907. Price 10 cents	3,500
Experiments on the Metabolism of Matter and Energy in the Human Body, 1903–4. By F. G. Benedict, Ph. D., and R. D. Milner, Ph. D. Pp. 335, frontispiece, pls. 2, figs. 4. Bulletin No. 175. June 17, 1907. Price 50 cents	1,000
Preparation of Vegetables for the Table. By Maria Parloa. Pp. 48. Farmers' Bulletin No. 256. Reprint, July 17, 1906	60,000
Reprint, October 4, 1906	20,000
Reprint, November 27, 1906	30,000
Reprint, March 26, 1907	15,000
Reprint, May 25, 1907	15,000
Reprint June 29, 1907	5,000
Fowls: Care and Feeding. By G. C. Watson, Agriculturist of the Pennsylvania Agricultural Experiment Station. Pp. 24, figs. 4. Farmers' Bulletin No. 41. Reprint, July 18, 1906	30,000
Reprint, December 3, 1906	20,000
Reprint, March 22, 1907	15,000
Experiment Station Work, XXVI. Compiled from the Publications of the Agricultural Experiment Stations. Pp. 32, figs. 9. Farmers' Bulletin No. 202. Reprint, July 21, 1906	15.000
Drainage of Farm Lands. By C. G. Elliott, Drainage Expert. Pp. 40, figs. 19. Farmers' Bulletin No. 187. Reprint, July 23, 1906	20,000
Reprint, March 9, 1907	10,000
Reprint, June 29, 1907	10,000

	Copies.
Canned Fruit, Preserves, and Jellies: Household Methods of Preparation. By Maria Parloa. Pp. 32, figs. 5. Farmers' Bulletin No. 203. Reprint, July 25, 1906	30,000
Reprint, November 17, 1906	15,000
Reprint, March 30, 1907	20,000
Principles of Horse Feeding. By C. F. Langworthy, Ph. D. Pp. 44. Farmers' Bulletin No. 170. Reprint, August 7, 1906	20,000
Reprint, November 9, 1906	10,000
Reprint, January 15, 1907	15,000
Reprint, May 4, 1907	15,000
Experiment Station Work, VII. Pp. 32, figs. 8. Farmers' Bulletin No. 84. Reprint, August 11, 1906	10,000
Reprint, April 11, 1907	10,000
Meat: Composition and Cooking. By Chas. D. Woods. Pp. 32, figs. 4. Farmers' Bulletin No. 34. Reprint, August 13, 1906	5,000
Reprint, November 20, 1906	10,000
Reprint, March 22, 1907	10,000
Potato Culture. By J. F. Duggar. Pp. 24, figs. 2. Farmers' Bulletin No. 35. Reprint, August 13, 1906	15,000
Reprint, December 14, 1906	10,000
Reprint, March 9, 1907	10,000
Reprint, April 24, 1907	10,000
Commercial Fertilizers: Composition and Use. By Edward B. Voorhees, M. A., D. Sc., Director of the New Jersey Agricultural Experiment Stations. (Revised, March, 1906.) Pp. 37. Farmers' Bulletin No. 44. Reprint, August 14, 1906	10,000
Reprint, February 25, 1907	10,000
Reprint, April 26, 1907	10,000
Irrigation in Field and Garden. By E. J. Wickson, M. A., of the California Agricultural Experiment Station. Pp. 40, figs. 18. Farmers' Bulletin No. 138. Reprint, August 14, 1906	10,000
Reprint, March 7, 1907	10,000
The Feeding of Farm Animals. (Second revision.) By E. W. Allen, Ph. D., Assistant Director of the Office of Experiment Stations. Pp. 40. Farmers' Bulletin No. 22. Reprint, August 15, 1906	15,000
Reprint, December 11, 1906	15,000
Reprint, March 15, 1907	15,000
Reprint, March 29, 1907	15,000
Experiment Station Work, XXVII. Compiled from the Publications of the Agricultural Experiment Stations. Pp. 32, figs. 7. Farmers' Bulletin No. 210. Reprint, August 16, 1906	10,000
Reprint, April 15, 1907	10,000
Sugar as Food. By Mary Hinman Abel. Pp. 27. Farmers' Bulletin No. 93. Reprint, August 17, 1906	10,000
Reprint, December 21, 1906	10,000
Experiment Station Work, XIII. Pp. 32, figs. 3. Farmers' Bulletin No. 107. Reprint, August 17, 1906	10,000
Reprint, June 29, 1907	5,000
Cotton Seed and Its Products. Pp. 16. Farmers' Bulletin No. 36. Reprint, August 18, 1906	10,000
Reprint, April 18, 1907	10,000
Eggs and Their Uses as Food. By C. F. Langworthy, Phd. D. Pp. 38. Farmers' Bulletin No. 128. Reprint, August 21, 1906	10,000
Reprint, December 21, 1906	15,000
Reprint, May 9, 1907	15,000
Experiment Station Work, XXXIII. Compiled from the Publications of the Agricultural Experiment Stations. Pp. 32, figs. 6. Farmers' Bulletin No. 244. Reprint, August 21, 1906	10,000
Reprint, February 4, 1907	15,000
Experiment Station Work, XIV. Pp. 29, figs. 5. Farmers' Bulletin No. 114. Reprint, August 22, 1906	10,000
Reprint, June 29, 1907	5,000
Barnyard Manure. By W. H. Beal. Pp. 32, figs. 4. Farmers' Bulletin No. 192. Reprint, August 24, 1906	20,000
Reprint, March 23, 1907	15,000
Experiment Station Work, XXI. Pp. 32, figs. 3. Farmers' Bulletin No. 162. Reprint, August 28, 1906	10,000

	Copies.
Experiment Station Work, XXIV. Compiled from the Publications of Agricultural Experiment Stations. Pp. 32, figs. 14. Farmers' Bulletin No. 190. Reprint, August 29, 1906	10,000
Experiment Station Work, II. Pp. 32, figs. 7. Farmers' Bulletin No. 65. Reprint, August 31, 1906	10,000
How to Build Small Irrigation Ditches. By C. T. Johnston, C. E., and J. D. Stannard, Assistants in Irrigation Investigations. Pp. 29, figs. 9. Farmers' Bulletin No. 158. Reprint, August 31, 1906	10,000
Reprint, March 23, 1907	10,000
Experiment Station Work, XXIX. Compiled from Publications of the Agricultural Experiment Stations. Pp. 32, figs. 6. Farmers' Bulletin No. 225. Reprint, August 31, 1906	10,000
Reprint, March 30, 1907	10,000
Experiment Station Work, XXXIV. Compiled from the Publications of the Agricultural Experiment Stations. Pp. 32, fig. 1. Farmers' Bulletin No. 251. Reprint, August 31, 1906	15,000
Reprint, February 8, 1907	15,000
Experiment Station Work, XXXVI. Compiled from the Publications of the Agricultural Experiment Stations. Pp. 32, figs. 2. Farmers' Bulletin No. 262. August 31, 1906	30,000
Reprint, April 11, 1907	10,000
Experiment Station Work, XXIII. Compiled from the Publication of the Agricultural Experiment Stations. pp. 32, figs. 9. Farmers' Bulletin No. 186. Reprint, September 4, 1906	10,000
Reprint, April 3, 1907	10,000
Experiment Station Work, XI. Pp. 32, figs. 9. Farmers' Bulletin No. 144. Reprint, September 5, 1906	10,000
Reprint, April 26, 1907	10,000
Farmers' Reading Courses. Pp. 20. Farmers' Bulletin No. 109. Reprint, September 7, 1906	10,000
Reprint, January 7, 1907	15,000
Milk as Food. Pp. 40, Charts 2. Farmers' Bulletin No. 74. Reprint, September 12, 1906	15,000
Reprint, December 11, 1906	10,000
Reprint, June 29, 1907	5,000
Experiment Station Work—I. Pp. 32, figs. 10. Farmers' Bulletin No. 56. Reprint, September 11, 1906	10,000
Reprint, February 28, 1907	10,000
Corn Culture in the South. By S. M. Tracey, M. S. Pp. 24. Farmers' Bulletin No. 81. Reprint, September 13, 1906	15,000
Reprint, April 16, 1907	10,000
Conformation of Beef and Dairy Cattle. By Andrew M. Soule. Pp. 46, figs. 44. Farmers' Bulletin No. 143. Reprint, September 18, 1906	15,000
Reprint, April 13, 1907	15,000
Poultry as Food. By Helen W. Atwater. Pp. 40. Farmers' Bulletin No. 182. Reprint, September 19, 1906	20,000
Reprint, March 11, 1907	15,000
Beans, Peas, and Other Legumes as Food. (Corrected March 25, 1906.) By Mary Hinman Abel. Pp. 40, figs. 10. Farmers' Bulletin No. 121. Reprint, September 21, 1906	10,000
Reprint, December 13, 1906	15,000
Reprint, June 29, 1907	5,000
Experiment Station Work, XXII. Compiled from the Publications of the Agricultural Experiment Stations. Pp. 32, figs. 6. Farmers' Bulletin No. 169. Reprint, September 25, 1906	10,000
The Liming of Soils. By H. J. Wheeler, Ph. D., Director, and Chemist of the Rhode Island Agricultural Experiment Station. (Revised March 25, 1905.) Pp. 24. Farmers' Bulletin No. 77. Reprint, September 25, 1906	10,000
Reprint, March 20, 1907	10,000
Experiment Station Work, XXXII. Compiled from the Publications of the Agricultural Experiment Stations. Pp. 32, figs. 6. Farmers' Bulletin No. 237. Reprint, September 28, 1906	10,000
Reprint, March 7, 1907	10,000
Reprint, April 1, 1907	15,000

	Copies.
Experiment Station Work, XXVII. Compiled from the Publications of the Agricultural Experiment Stations. Pp. 32, fig. 1. Farmers' Bulletin No. 222. Reprint, September 28, 1906	10,000
Onion Culture. By R. L. Watts, Horticulturist of the Tennessee Agricultural Experiment Station. Pp. 32, figs. 3. Farmers' Bulletin No. 39. Reprint, September 29, 1906	10,000
Reprint, March 19, 1907	10,000
Reprint, June 29, 1907	5,000
Experiment Station Work XXX. Compiled from the Publications of the Agricultural Experiment Stations. Pp. 32, figs. 2. Farmers' Bulletin No. 227. Reprint, October 1, 1906	10,000
Reprint, April 2, 1907	10,000
Principles of Nutrition and Nutritive Value of Food. (Corrected to April 5, 1906.) By W. O. Atwater, Ph. D., Special Agent in Charge of Nutrition Investigations. Pp. 48, Charts 2, Farmers' Bulletin No. 142. Reprint, October 1, 1906	10,000
Reprint, December 29, 1906	10,000
Reprint, April 16, 1907	15,000
Experiment Station Work, XXXI. Compiled from the Publications of the Agricultural Experiment Stations. Pp. 32, figs 5. Farmers' Bulletin No. 233. Reprint, October 1, 1906	10,000
Reprint, January 11, 1907	10,000
Cereal Breakfast Foods. By Charles D. Woods, D. Sc., Director Maine Agricultural Experiment Station, and Harry Snyder, B. S., Professor of Chemistry, University of Minnesota. Pp. 37, Farmers' Bulletin No. 249. Reprint, October 2, 1906	20,000
Reprint, January 12, 1907	20,000
Experiment Station Work, XVI. Pp. 32, figs. 5. Farmers' Bulletin No. 122. Reprint, October 3, 1906	10,000
Souring of Milk and Other Changes in Milk Products. Pp. 24, Farmers' Bulletin No. 29. Reprint, October 10, 1906	10,000
Reprint, March 22, 1907	10,000
Practical Information for Beginners in Irrigation. By S. Fortier, Irrigation Engineer. Pp. 40, figs. 25, Farmers' Bulletin No. 263. October 10, 1906	20,000
Reprint, March 20, 1907	15,000
Kafir Corn; Characteristics, Culture, and Uses. By C. C. Georgeson. Pp. 16, fig. 1. Farmers' Bulletin No. 37. Reprint, October 17, 1906	5,000
Silos and Silage. (Revised.) By Chas. S. Plumb, B. S., of the Ohio State University. Pp. 32, figs. 6. Farmers' Bulletin No. 32. Reprint, October 17, 1906	10,000
Reprint, May 23, 1907	10,000
Experiment Station Work, XVII. Pp. 32, figs. 6. Farmers' Bulletin No. 124. Reprint, October 19, 1906	5,000
Reprint, April 25, 1907	10,000
Peanuts: Culture and Uses. By R. B. Handy. Pp. 24, fig. 1. Farmers' Bulletin No. 25. Reprint, October 22, 1906	10,000
Reprint, April 11, 1907	10,000
Irrigation in Humid Climates. By F. H. King, Physicist of the Wisconsin Agricultural Experiment Station. Pp. 27, figs. 4. Farmers' Bulletin No. 46. Reprint, October 22, 1906	5,000
Essential Steps in Securing an Early Crop of Cotton. By R. J. Redding, Director of the Georgia Experiment Station. Pp. 16. Farmers' Bulletin No. 217. Reprint, October 30, 1906	10,000
Reprint, April 3, 1907	10,000
Experiment Station Work, XXXVII. Compiled from the Publications of the Agricultural Experiment Stations. Pp. 32, fig. 1. Farmers' Bulletin No. 267. November 1, 1906	30,000
Experiment Station Work, XX. Pp. 32, figs. 6. Farmers' Bulletin No. 149. Reprint, November 5, 1906	5,000
Reprint, March 29, 1907	10,000
Experiment Station Work, XV. Pp. 32, figs. 5. Farmers' Bulletin No. 119. Reprint, November 20, 1906	5,000
Reprint, April 19, 1907	10,000

	Copies.
Modern Conveniences for the Farm Home. By Elmina T. Wilson, C. E. Pp. 48, figs. 26. Farmers' Bulletin No. 270. November 22, 1906	30,000
Reprint, March 1, 1907	20,000
Reprint, May 6, 1907	20,000
Irrigation in Fruit Growing. By E. J. Wickson, M. A., Professor of Agricultural Practices, University of California, and Horticulturist of the California Experiment Station. Pp. 48. Farmers' Bulletin No. 116. Reprint, November 24, 1906	5,000
Reprint, March 21, 1907	10,000
Bread and the Principles of Bread Making. By Helen W. Atwater. (Revised October 15, 1906.) Pp. 40, figs. 7. Farmers' Bulletin No. 112. November 30, 1906	10,000
Reprint, January 14, 1907	15,000
Reprint, May 3, 1907	10,000
Raising Sheep for Mutton. By Charles F. Curtiss, Director of the Iowa Agricultural Experiment Station. Pp. 48, figs. 18. Farmers' Bulletin No. 96. Reprint, December 14, 1906	10,000
Reprint, April 26, 1907	10,000
The Guinea Fowl and Its Use as Food. By C. F. Langworthy, Ph. D. Pp. 24, figs. 3. Farmers' Bulletin No. 234. Reprint, December 14, 1906	10,000
Reprint, April 25, 1907	5,000
Experiment Station Work, XXXVIII. Compiled from the Publications of the Agricultural Experiment Stations. Pp. 32, figs. 4. Farmers' Bulletin No. 273. December 20, 1906	30,000
Experiment Station Work, XII. Pp. 32, figs. 4. Farmers' Bulletin No. 105. Reprint, January 2, 1907	5,000
Reprint, March 27, 1907	10,000
Experiment Station Work, IV. Pp. 32, figs. 3. Farmers' Bulletin No. 73. Reprint, January 10, 1907	15,000
Experiment Station Work, XVIII. Pp. 32, figs. 14. Farmers' Bulletin No. 133. Reprint, January 11, 1907	15,000
The Manuring of Cotton. Pp. 16. Farmers' Bulletin No. 48. Reprint, January 16, 1907	15,000
Experiment Station Work, XXXV. Compiled from the Publications of the Agricultural Experiment Stations. Pp. 32, figs. 3. Farmers' Bulletin No. 259. Reprint, January 22, 1907	15,000
Reprint, May 8, 1907	10,000
Experiment Station Work, X. Pp. 32, figs. 5. Farmers' Bulletin No. 97. Reprint, February 13, 1907	10,000
The Use of Alcohol and Gasoline in Farm Engines. By Charles Edward Lucke, M. S., Ph. D., of Columbia University, and S. M. Woodward, M. S. M. A., Irrigation Engineer. Pp. 40, figs. 12. Farmers' Bulletin No. 277. February 23 1907	30,000
Reprint, June 29, 1907	5,000
Experiment Station Work, XXXIX. Compiled from the Publications of the Agricultural Experiment Stations. Pp. 32, figs. 2. Farmers' Bulletin No. 276. March 12, 1907	30,000
Experiment Station Work, III. Pp. 32, figs. 2. Farmers' Bulletin No. 69. Reprint, March 21, 1907	5,000
Reprint, June 29, 1907	5,000
Experiment Station Work, VIII. Pp. 32, figs. 6. Farmers' Bulletin No. 87. Reprint, March 23, 1907	10,000
Experiment Station Work, IX. Pp. 31. Farmers' Bulletin No. 92. Reprint, March 30, 1907	10,000
Fish as Food. (Revised, March, 1907.) By C. F. Langworthy. Pp. 32. Farmers' Bulletin No. 85. April 6, 1907	10,000
Experiment Station Work, XL. Compiled from the Publications of the Agricultural Experiment Stations. Pp. 32. Farmers' Bulletin No. 281. April 10, 1907	30,000
Experiment Station Work, XI. Pp. 32, figs. 5. Farmers' Bulletin No. 103. Reprint, April 26, 1907	5,000
Experiment Station Work, XXV. Compiled from the Publications of the Agricultural Experiment Stations. Pp. 32, figs. 9. Farmers' Bulletin No. 193. Reprint, May 2, 1907	5,000

	Copies.
Experiment Station Work, VI. Pp. 30, figs. 2. Farmers' Bulletin No. 79. Reprint, May 4, 1907	5,000
Use of Fruit as Food. By C. F. Langworthy, Ph. D., in charge of Nutrition Investigations. Pp. 40, fig. 1. Farmers' Bulletin No. 293. May 25, 1907	15,000
Potatoes and Other Root Crops as Food. By C. F. Langworthy, Ph. D., in Charge of Nutrition Investigations. Pp. 48, figs. 4. Farmers' Bulletin No. 295. June 19, 1907	15,000
Experiment Station Work, XLI. Compiled from the Publications of the Agricultural Experiment Stations. Pp. 32. Farmers' Bulletin No. 296. June 19, 1907	20,000
Food Value of Corn and Corn Products. By Charles D. Woods, D. Sc., Director Maine Agricultural Experiment Station. Pp. 40, figs. 2. Farmers' Bulletin No. 298. June 29, 1907	15,000

FOREST SERVICE.

A Short Account of the Big Trees of California. Pp. 30, pls. 17. Bulletin No. 28. Reprint, July 10, 1906. Price 15 cents	1,000
How to Grow Young Trees for Forest Planting. By E. A. Sterling, Assistant Forester, In Charge of Forest Extension. Pp. ii, 183–192, pl. 1, fig. 1. (From Yearbook of the Department for 1905.) July 12, 1906	3,000
Reprint, October 30, 1906	10,000
Prolonging the Life of Telephone Poles. By Henry Grinnell, Assistant Forest Inspector. Pp. ii, 455–464, pl. 1, figs. 4. (From Yearbook of the Department for 1905.) July 18, 1906	3,000
Reprint, November 2, 1906	10,000
The Relation of Forests to Stream Flow. By James W. Toumey, Collaborator, Bureau of Forestry. Pp. iii, 279–288. (From Yearbook of the Department for 1905.) July 20, 1906	1,000
Reprint, April 15, 1907	1,500
Reprint, June 3, 1907	1,000
Waste in Logging Southern Yellow Pine. By J. G. Peters, Forest Assistant. Pp. iii, 483–494, pls. 2. (From the Yearbook of the Department for 1905.) July 20, 1906	3,000
Reprint, November 1, 1906	10,000
Reprint, February 23, 1907	1,000
The Basket Willow. By William F. Hubbard, Forest Assistant. With a chapter on Insects Injurious to Basket Willow. By F. H. Chittenden, of the Bureau of Entomology. Pp. 100, pls. 7, figs. 27. Bulletin No. 46. Reprint, July 26, 1906. Price 15 cents	500
Report of the Forester for 1905. By Gifford Pinchot. (From Annual Reports of the Department for 1905.) Pp. iv, 199–237. Reprint, July 31, 1906	1,000
Notes on the Red Cedar. By Charles Mohr, Ph. D. Pp. 37, pls. 3, figs. 13. Bulletin No. 31. Reprint. August 13, 1906. Price 10 cents	500
Experiments on the Strength of Treated Timber. By W. Kendrick Hatt, Ph. D., C. E. Pp. 31, fig. 1. Circular No. 39. August 22, 1906	10,000
Practical Results of the Cup and Gutter System of Turpentining. By Charles H. Herty, Ph. D. Pp. 7, figs 5. Circular No. 34. Reprint, August 23, 1906	3,000
Sugar Pine and Western Yellow Pine in California. By Albert W. Cooper, M. F., Forest Inspector. Pp. 42, pls. 4. Bulletin No. 69. August 25, 1906. Price 10 cents	8,000
Reprint, February 21, 1907	1,000
Practical Assistance to Farmers, Lumbermen, and Others in Handling Forest Lands. By Gifford Pinchot, Forester. Pp. 4. Circular No. 21. (Fourth Revision.) August 31, 1906	2,000
Fifth Revision, June 29, 1907	10,000
Forest Planting on Coal Lands in Western Pennsylvania. By S. N. Spring, Forest Assistant. Pp. 16. Circular No. 41. September 6, 1906	10,000
The Utilization of Tupelo. By H. B. Halroyd, Forest Assistant, Forest Service. Pp. 16, figs. 4. Circular No. 40. September 6, 1906	10,000

	Copies.
Suggestions to Prospective Forest Students. By Gifford Pinchot, Forester. Pp. 4. Circular No. 23. (Third Revision.) Reprint, September 6, 1906	1,000
Reprint, January 14, 1907	1,000
The Forest Service: What It Is and How It Deals with Forest Problems. By Gifford Pinchot, Forester. Pp. 32, fig. 1. Circular No. 36. (Second Edition.) Reprint, September 8, 1906	100,000
Reprint, October 8, 1906	100,000
Third Edition, June 14, 1907	100,000
Progress of Forestry in 1905. By Quincy R. Craft, Editorial Clerk, Forest Service. Pp. 636–644, figs. 2. (From the Yearbook of the Department for 1905.) September 18, 1906	15,000
The Red Gum. By Alfred K. Chittenden, M. F., Forest Inspector. With a Discussion of the Mechanical Properties of Red Gum Wood. By W. Kendrick Hatt, Ph. D., C. E. Pp. 56, pls. 6, map 1, figs. 7. Bulletin No. 58. (Revised Edition.) September 20, 1906. Price 5 cents	1,500
Forest Preservation and National Prosperity. Portions of Addresses Delivered at the American Forest Congress, Washington, January 2 to 6, 1905, by President Roosevelt, Ambassador Jusserand, Secretary Wilson, and Others. Pp. 31. Circular No. 35. Reprint, September 27, 1906	10,000
Forest Reserves in Idaho. By Gifford Pinchot, Forester. Pp. 90, pl. 1, figs. 5. Bulletin No. 67. Reprint. September 28, 1906. Price 10 cents	1,200
Consumption of Tanbark in 1905. By H. M. Hale, Forest Assistant. Pp. 4. Circular No. 42. October 3, 1906	8,000
Reprint, February 7, 1907	1,000
Cross-Ties Purchased by the Steam Railroads of the United States in 1905. By H. M. Hale, Forest Assistant. Pp. 6. Circular No. 43. October 4, 1906	10,000
Reprint, February 13, 1907	1,000
Reprint, June 21, 1907	500
Wood Used for Pulp in 1905. By H. M. Hale, Forest Assistant. Pp. 11. Forest Service. Circular No. 44. October 22, 1906	10,000
Instructions to Engineers of Timber Tests. By W. Kendrick Hatt, Ph. D., C. E. Pp. 55, figs. 13. Circular No. 38. October 30, 1906	8,000
Reprint, December 12, 1906	7,000
Southern Pine: Mechanical and Physical Properties. By B. E. Fernow, Chief of Division of Forestry. Pp. 19, diagrams 4. Circular No. 12. Reprint, October 31, 1906	1,000
Reprint, June 3, 1907	1,000
Wood Used for Distillation in 1905. By H. M. Hale, Forest Assistant. Pp. 3. Circular No. 50. November 6, 1906	7,000
Reprint, February 2, 1907	1,000
Reprint, June 3, 1907	500
Wood Used in Veneer in 1905. By H. M. Hale, Forest Assistant. Pp. 4. Circular No. 51. November 8, 1906	6,000
Reprint, February 2, 1907	1,000
Reprint, June 4, 1907	500
Check List of the Forest Trees of the United States, Their Names and Ranges. By George B. Sudworth, Dendrologist. Pp. 144. Bulletin No. 17. Reprint, November 14, 1906. Price 15 cents	1,000
The Woodsman's Handbook, Part I. By Henry Solon Graves. (Revised Edition.) Pp. 148, pl. 1, figs. 15. Bulletin No. 36. Reprint, November 20, 1906	1,000
Reprint, May 9, 1907	1,000
The Determination of Timber Values. By Edward S. Braniff, Forest Assistant. Pp. iii, 453–460. From Yearbook of the Department for 1904.) Reprint, December 1, 1906	500
Rules and Specifications for the Grading of Lumber Adopted by the Various Lumber Manufacturing Associations of the United States. Compiled by E. R. Hodson, Forest Assistant. Pp. 127. Bulletin No. 71. December 12, 1906. Price 15 cents	1,000

	Copies.
Kiln-Drying Hardwood Lumber. By Frederick Dunlap, Forest Assistant, Forest Service. Pp. 19. Circular No. 48. December 15, 1906	8,000
Reprint, February 8, 1907	2,000
Reprint, June 3, 1907	2,000
Reprint, June 22, 1907	1,000
Timber used in the Mines of the United States in 1905. By R. S. Kellogg, Forest Assistant. Pp. 8. Circular No. 49. December 18, 1906	20,000
Reprint, February 15, 1907	1,000
Effect of Moisture Upon the Strength and Stiffness of Wood. By Harry Donald Tiemann, Assistant Forest Inspector. Pp. 144, pls. 4, figs. 25. Bulletin No. 70. December 21, 1906. Price 15 cents	1,000
The Lumber Cut of the United States in 1905. By S. R. Kellogg, Forest Assistant. Pp. 23, figs. 3. Forestry Circular No. 52. December 22, 1906	25,000
Reprint, March 16, 1907	15,000
Holding Force of Railroad Spikes in Wooden Ties. By W. Kendrick Hatt, Ph. D., C. E. Pp. 7, figs. 4. Circular No. 46. December 29, 1906	5,000
Reprint, February 8, 1907	1,000
Reprint, February 23, 1907	2,000
Forest Planting in Eastern Nebraska. By Frank G. Miller, M. F., Forest Assistant. Pp. 32. Circular No. 45. December 29, 1906	8,000
Reprint, February 13, 1907	25,000
Strength of Packing Boxes of Various Woods. By W. Kendrick Hatt, Ph. D., C. E. Pp. 8, figs. 4. Circular No. 47. December 29, 1906	8,000
Reprint, February 11, 1907	1,000
Reprint, March 2, 1907	2,000
Reprint, May 29, 1907	500
Wood used for Tight Cooperage Stock in 1905. By H. M. Hale, Forest Assistant. Pp. 8. Forest Circular No. 53. January 12, 1907	9,000
Reprint, May 29, 1907	500
Report of the Forester for 1906. By Gifford Pinchot. Pp. 43. (From Annual Reports of the Department for 1906.) January 15, 1907	2,500
Wolves in Relation to Stock, Game, and the National Forest Reserves. By Vernon Bailey, Assistant in Charge of Geographical Distribution in the Biological Survey. Pp. 31, pls. 3, figs. 5. Bulletin No. 72. January 21, 1907	14,000
Forest Planting Leaflet. Scotch Pine (*Pinus sylvestris*). Pp. 4. Circular No. 68. January 22, 1907	8,000
Forest Planting Leaflet. Honey Locust (*Gleditsia triacanthos*). Pp. 3. Circular No. 74. January 22, 1907	8,000
Forest Planting Leaflet. How to Cultivate and Care for Forest Plantations on the Semiarid Plains. Pp. 4. Circular No. 54. January 22, 1907	8,000
Forest Planting Leaflet. European Larch (*Laris europaea*). Pp. 3. Circular No. 70. January 22, 1907	8,000
Forest Planting Leaflet. Red Oak (*Quercus rubra*). Pp. 3. Circular No. 58. January 22, 1907	8,000
Forest Planting Leaflet. Bur Oak (*Quercus macrocarpa*). Pp. 3. Circular No. 56. January 22, 1907	8,000
Reprint, June 3, 1907	1,000
Forest Planting Leaflet. Red Pine (*Pinus resinosa*). Pp. 3. Circular No. 60. January 22, 1907	8,000
Forest Planting Leaflet. White Elm (*Ulmus americana*). Pp. 3. Circular No. 66. January 22, 1907	8,000
Forest Planting Leaflet. How to Pack and Ship Young Trees. Pp. 2. Circular No. 55. January 22, 1907	6,000
Reprint, June 3, 1907	1,000
Forest Planting Leaflet. Jack Pine (*Pinus divaricata*). Pp. 2. Circular 57. January 22, 1907	8,000
Forest Planting Leaflet. Eucalyptus. Pp. 6. Circular No. 59. January 22, 1907	8,000
Forest Planting Leaflet. Black Locust (*Robinia pseudacacia*). Pp. 4. Circular No. 64. January 22, 1907	8,000

	Copies.
Forest Planting Leaflet. Norway Spruce (*Picea excelsa*). Pp. 4. Circular No. 65. January 22, 1907	8,000
Forest Planting Leaflet. Fence-Post Trees. Pp. 4. Circular No. 69. January 22, 1907	8,000
Reprint, June 1, 1907	2,000
Forest Planting Leaflet. Chestnut (*Castanea dentata*). Pp. 4. Circular No. 71. January 22, 1907	8,000
Forest Planting Leaflet. Cottonwood (*Populus deltoides*). Pp. 4. Circular No. 77. January 22, 1907	8,000
Forest Planting Leaflet. Red Cedar (*Juniperus virginiana*). Pp. 4. Circular No. 73. January 31, 1907	11,000
Forest Planting Leaflet. Hackberry (*Celtis occidentalis*). Pp. 3. Circular No. 75. January 31, 1907	7,000
Reprint, June 1, 1907	2,000
Forest Planting Leaflet. Shagbark Hickory (*Hicoria ovata*). Pp. 4. Circular No. 62. January 31, 1907	6,000
Reprint, March 26, 1907	3,000
Forest Planting Leaflet. White Pine (*Pinus strobus*). Pp. 6. Circular No. 67. January 31, 1907	10,000
Forest Planting Leaflet. Basswood (*Tilia americana*). Pp. 3. Circular No. 63. January 31, 1907	6,000
Reprint, March 26, 1907	3,000
Forest Planting Leaflet. Western Yellow Pine (*Pinus ponderosa*). Pp. 2. Circular No. 72. January 31, 1907	6,000
Reprint, May 23, 1907	3,000
A Working Plan for Forest Lands in Hampton and Beaufort Counties, South Carolina. By Thomas H. Sherrard, Assistant Forester. Pp. 54, pls. 8, diagrams 11. Bulletin No. 43 (Revised November, 1906). February 2, 1907. Price 15 cents	500
Forest Planting Leaflet. How to Transplant Forest Trees. Pp. 4, fig. 1. Circular No. 61. February 7, 1907	10,000
Reprint, June 3, 1907	1,000
Woods Used for Packing Boxes in New England. By J. P. Wentling, Forest Assistant. Pp. 4. Circular No. 78. February 15, 1907	10,000
Reprint, May 24, 1907	8,000
Practical Assistance to Tree Planters. Pp. 4. Circular No. 22 (Fifth Revision). February 25, 1907	10,000
Reprint, June 18, 1907	237,000
A Working Plan for Forest Lands in Berkeley County, South Carolina. By Charles S. Chapman, Forest Assistant. Pp. 62, pls. 4, map 1. Bulletin No. 56. Reprint, March 2, 1907. Price 10 cents	500
The Fractional Distillation of Coal-Tar Creosote. By Arthur L. Dean and Ernest Bateman, Experts. Pp. 31, figs. 17. Circular No. 80, March 9, 1907	7,000
Reprint, May 21, 1907	500
Forest Planting Leaflet. Silver Maple (*Acer saccharinum*). Pp. 3. Circular No. 76. March 16, 1907	7,000
Reprint, May 17, 1907	2,000
Forest Products of the United States: 1905. By R. S. Kellogg, Forest Inspector, and H. M. Hale, Forest Assistant. Pp. 69. Bulletin No. 74. March 20, 1907. Price 15 cents	8,000
Timber: An Elementary Discussion of the Characteristics and Properties of Wood. By Filibert Roth, Special Agent in Charge of Timber Physics. Pp. 88, figs. 49. Bulletin No. 10. Reprint, March 26, 1907. Price 10 cents	2,000
Arbor Day. Lesson of the Day. Pp. 4. Circular No. 96. April 3, 1907	123,000
Reprint, April 15, 1907	6,000
Reprint, April 19, 1907	30,000
Reprint, April 29, 1907	10,000
Reprint, May 13, 1907	10,000
The Timber Supply of the United States. By R. S. Kellogg, Forest Inspector. Pp. 16, figs. 2. Circular No. 97. April 25, 1907	720,000
Forest Planting Leaflet. White Ash (*Fraxinus americana*). Pp. 4. Circular No. 84. April 25, 1907	7,000
Forest Planting Leaflet. Slippery Elm (*Ulmus pubescens*). Pp. 4. Circular No. 85. April 25, 1907	7,000

	Copies.
Forest Planting Leaflet. Black Cherry (*Prunus serotina*). Pp. 3. Circular No. 94. April 25, 1907	7,000
Forest Planting Leaflet. Sugar Maple (*Acer saccharum*). Pp. 4. Circular No. 95. April 25, 1907	7,000
Forest Planting Leaflet. Russian Mulberry (*Morus alba tatarica*). Pp. 3. Circular No. 83. April 26, 1907	8,000
Reprint, June 15, 1907	12,000
Forest Planting Leaflet. White Willow (*Salix alba*). Pp. 4. Circular No. 87. April 30, 1907	7,000
Forest Planting Leaflet. Yellow Poplar (*Liriodendron tulipifera*). Pp. 4. Circular No. 93. April 30, 1907	7,000
Forest Planting Leaflet. Coffeetree (*Gymnocladus dioicus*). Pp. 4. Circular No. 91. April 30, 1907	7,000
Forest Planting Leaflet. Tamarack (*Larix laricina*). Pp. 4. Circular No. 89. April 30, 1907	7,000
Forest Planting Leaflet. Osage Orange (*Toxylon pomiferum*). Pp. 3. Circular No. 90. May 1, 1907	8,000
Forest Planting Leaflet. Black Walnut (*Juglans nigra*). Pp. 5. Circular No. 88. May 1, 1907	8,000
Forest Planting Leaflet. Green Ash (*Frazinus lanceolata*). Pp. 4. Circular No. 92. May 1, 1907	8,000
Forest Planting Leaflet. Hardy Catalpa (*Catalpa speciosa*). Pp. 8, Circular No. 82. May 1, 1907	9,000
Forest Planting Leaflet. Boxelder (*Acer negundo*). Pp. 3. Circular No. 86. May 2, 1907	7,000
Forest Planting in Illinois. By R. S. Kellogg, Forest Inspector, 1907. Pp. 32, fig. 2. Circular No. 81. May 2, 1907	50,000
Quantity and Character of Creosote in Well Preserved Timbers. By Gellert Allman, Professor of Chemistry in Swathmore College. Pp. 16. Circular No. 98. May 9, 1907	27,000
The Control of Forest Fires at McCloud, California. By A. W. Cooper, Forest Inspector, and P. D. Kelleter, Forest Assistant. Pp. 16, fig. 1. Circular No. 79. May 16, 1907	73,000
Forestry and the Lumber Supply. Forestry and Foresters—by Theodore Roosevelt. The Exhaustion of the Lumber Supply—by R. L. McCormick. The Lumberman and the Forester—by Gifford Pinchot. Pp. 14. Circular No. 25. Reprint, June 1, 1907	2,000
Influence of Forestry Upon the Lumber Industry. By Overton W. Price, Assistant Forester. Pp. iii, 309–312, pls. 3. (From Yearbook of the Department for 1902.) Reprint, June 3, 1907	1,000
Practicability of Forest Planting in the United States. By William L. Hall, Chief of Division of Forest Extension. Pp. iii, 133–144, pls. 4. (From Yearbook of the Department for 1902.) Reprint, June 3, 1907	1,000
A Working Plan for Southern Hardwoods, and Its Results. By John Foley, Field Assistant. Pp. ii, 471–476, pls. 3. (From Yearbook of the Department for 1901.) Reprint, June 7, 1907	500
The Western Hemlock. By Edward T. Allen, Field Assistant. Pp. 55, frontispiece, pls. 12, figs. 5. Bulletin No. 33. Reprint, June 7, 1907. Price 20 cents	500
Forest Planting Leaflet. White Oak (*Quercus alba*). Pp. 4. Circular No. 106. June 17, 1907	10,000
Suggestions for Forest Planting in the Northeastern and Lake States. Pp. 15, fig. 1. Circular No. 100. June 22, 1907	185,000
Sawmill Statistics. Pp. 2. Circular No. 107. June 29, 1907	58,000
Summary of Mechanical Tests of Thirty-two Species of American Woods. B. E. Fernow, Chief, Division of Forestry. Pp. 15. Circular No. 15. Reprint, June 29, 1907	1,500
A Primer of Forestry. By Gifford Pinchot, Forester. Pp. 48, figs. 33. Farmers' Bulletin No. 173. Reprint, July 26, 1906	15,000
Reprint, March 20, 1907	10,000
Reprint, May 6, 1907	10,000
Reprint, June 25, 1907	10,000
Forest Planting and Farm Management. By George L. Clothier, Assistant Forest Inspector. Pp. 22, figs. 3. Farmers' Bulletin No. 228. Reprint, September 25, 1906	10,000
Reprint, January 17, 1907	15,000

	Copies.
Tree Planting on Rural School Grounds. By Wm. L. Hall, Assistant Superintendent of Tree Planting. Pp. 32, figs. 16. Farmers' Bulletin No. 134. Reprint, November 12, 1906	10,000
Reprint, April 4, 1907	5,000
Reprint, June 29, 1907	5,000
Maple Sugar and Sirup. By William F. Hubbard. Pp. 38, figs. 9. Farmers' Bulletin No. 252. Reprint, April 26, 1907	5,000

LIBRARY.

Accessions to the Department Library. April–June, 1906. Pp. 64. Bulletin No. 60. August 18, 1906. Price 10 cents	1,000
Accessions to the Department Library. July–September, 1906. Pp. 61. Bulletin No. 61. November 8, 1906. Price 10 cents	1,000
Report of the Librarian for 1906. By Josephine A. Clark. Pp. 8. (From Annual Reports of the Department for 1906), December 14, 1906	300
Accessions to the Department Library. October–December, 1906. Pp. 56. Bulletin No. 62. March 18, 1907. Price 10 cents	1,000
Accessions to the Department Library. January–March, 1907. Pp. 64, Bulletin No. 63. May 23, 1907. Price 10 cents	1,000

BUREAU OF PLANT INDUSTRY.

Progress in Drug-Plant Cultivation. By Rodney H. True, Physiologist in Charge of Drug-Plant Investigations. Pp. iii, 533–540, pls. 3. (From Yearbook of the Department for 1905), July 2, 1906	500
Reprint, November 2, 1906	1,000
Reprint, May 23, 1907	2,000
Diversified Farming in the Cotton Belt. I. South Atlantic Coast. By W. J. Spillman, Agriculturist, in Charge of Farm Management Investigations. II. Alabama and Mississippi. By M. A. Crosby, Assistant Agriculturist in Charge of Diversification Farms in Alabama and Mississippi. III. Louisiana, Arkansas, and Northeastern Texas. By D. A. Brodie, Assistant Agriculturist, in Charge of Diversification Farms in Louisiana, Arkansas, and Northeastern Texas. IV. Texas. By C. W. Warburton, Assistant Agriculturist, in Charge of Diversification Farms in Texas. Pp. iv, 192–218, pls. 3. (From Yearbook of the Department for 1905). July 12, 1906	500
Reprint, December 14, 1906	1,500
New Fruit Productions of the Department of Agriculture. By Herbert J. Webber, Physiologist in Charge of Plant-Breeding Investigations. Pp. iii, 275–290, pls. 7, fig. 1. (From Yearbook of the Department for 1905.) July 16, 1906	500
Reprint, November 1, 1906	2,000
New Opportunities in Subtropical Fruit Growing. By P. H. Rolfs, Pathologist in Charge of the Subtropical Laboratory. Pp. iii, 439–454, pls. 3, figs. 4. (From Yearbook of the Department for 1905.) July 18, 1906	500
The Handling of Fruit for Transportation. By G. Harold Powell, Pomologist in Charge of Fruit Transportation and Storage Investigations. Pp. ii, 349–362, pls. 4. (From Yearbook of the Department for 1905.) July 18, 1906	500
Reprint, October 24, 1906	3,000
The Business of Seed and Plant Introduction and Distribution. By A. J. Peters, Botanist in Charge of Seed and Plant Introduction and Distribution. Pp. iii, 291–306, pls. 3. (From Yearbook of the Depart for 1905.) July 18, 1906	500
The Effect of Inbreeding in Plants. By A. D. Shamel, Physiologist in Charge of Tobacco Breeding. Pp. iii, 377–392, pls. 3, figs. 2. (From Yearbook of the Department for 1905.) July 18, 1906	500
Wild Medicinal Plants of the United States. By Alice Henkel, Assistant in Drug-Plant Investigations. Pp. 76. Bulletin No. 89. Reprint, July 26, 1906. Price 5 cents	300
Reprint, May 18, 1907	1,000
Promising New Fruits. By William A. Taylor, Pomologist in Charge of Field Investigations. Pp. iii. 495–510, pls. 9. (From Yearbook of the Department for 1905.) July 28, 1906	1,500

	Copies.
Plant Diseases in 1905. By W. A. Orton, Plant Pathologist. Pp. 602–611. (From Yearbook of the Department for 1905.) August 18, 1906	500
Farm Practice with Forage Crops in Western Oregon and Western Washington. By Byron Hunter, Assistant Agriculturist, Farm-Management Investigations. Pp. 39, figs. 4. Bulletin No. 94. August 24, 1906. Price 10 cents	3,000
Date Varieties and Date Culture in Tunis. By Thomas H. Kearney, Physiologist, Plant Breeding Investigations. Pp. 112, pls. 10, figs. 52. Bulletin No. 92. September 4, 1906. Price 25 cents	1,000
A New Type of Red Clover. By Charles J. Brand, Assistant Physiologist. Pp. 48, pls. 3, figs. 2. Bulletin No. 95. September 29, 1906. Price 10 cents	2,000
The Drug Known as Pinkroot. By W. W. Stockberger, Expert in Drug-Plant Investigations. Pp. 8, pls. 2, figs. 2. Bulletin No. 100, Part V. October 6, 1906. Price 5 cents	1,750
Orchard Grass. By R. A. Oakley, Assistant Agriculturist, Farm-Management Investigations. Pp. 16, pl. 1. Bulletin No. 100, Part VI. October 6, 1906. Price 5 cents	3,500
The Effect of Copper upon Water Bacteria. By Karl F. Kellerman, Physiologist in Charge of Soil Bacteriology, etc., and T. D. Beckwith, Scientific Assistant. Pp. 19. Bulletin No. 100, Part VII. October 17, 1906. Price 5 cents	4,500
Opportunities in Agriculture. I. Growing Crops Under Glass. By B. T. Galloway, Chief of the Bureau. II. Fruit Growing. By M. B. Waite, Pathologist in Charge of Investigations of Diseases of Orchard Fruits. III. General Farming. By W. J. Spillman, Agrostologist. Pp. ii, 161–190, pls. 3. (From Yearbook of the Department for 1904.) Reprint, November 19, 1906	1,000
Reprint, May 18, 1907	2,000
Fertilizers for Special Crops. By A. F. Woods and R. E. B. McKenney. Pp. iii, 553–572. (From Yearbook of the Department for 1902.) Reprint, November 20, 1906	500
Reprint, February 12, 1907	500
Reprint, May 16, 1907	1,000
Conditions Affecting Legume Inoculation. By Karl F. Kellerman, Physiologist, and T. R. Robinson, Assistant. 1906. Pp. 15, pls. 2. Bulletin No. 100, Part VIII. December 1, 1906. Price 10 cents	2,000
Report on New Building Operations for 1906. By B. T. Galloway, Chairman, Building Committee. Pp. 8. (From Annual Reports of the Department for 1906.) December 14, 1906	300
Summary of Recent Investigations of the Value of Cacti as Stock Food. By David Griffiths, Assistant Agrostologist, and R. F. Hare, Chemist, New Mexico College of Agriculture and Mechanic Arts. Pp. 16. Bulletin 102, Part I. January 3, 1907. Price 5 cents	3,000
Pollination of Pomaceous Fruits. By M. B. Waite. (From Yearbook of the Department for 1898.) Pp. ii, 167–180. Reprint, January 14, 1907	500
Report of the Chief of the Bureau of Plant Industry for 1906. By B. T. Galloway. (From Annual Reports of the Department for 1906.) Pp. 96. January 18, 1907	500
Reprint, March 27, 1907	250
A Quick Method for the Determination of Moisture in Grain. By Edgar Brown, Botanist in Charge of the Seed Laboratory, and J. W. T. Duvel, Assistant. Pp. 24, figs. 12. Bulletin No. 99. January 31, 1907. Price 5 cents	2,000
A Successful Dairy Farm. By L. G. Dodge, Scientific Assistant, Farm Management Investigations. Pp. 7, pl. 1. Bulletin No. 102, Part II. February 1, 1907. Price 5 cents	5,500
Planning A Cropping System. By W. J. Spillman, Agriculturist in Charge of Farm Management Investigations. Pp. 11, figs. 2. Bulletin No. 102, Part III. March 14, 1907. Price 5 cents	6,000
Tobacco Breeding. By A. D. Shamel and W. W. Cobey, in Charge of Tobacco Breeding Experiments. Pp. 71, pls. 10, figs. 14. Bulletin No. 96. March 15, 1907. Price 15 cents	2,000

	Copies.
Seeds and Plants Imported During the Period from December, 1903, to December, 1905. Inventory No. 11—Nos. 9897 to 16796. Pp. 255. Bulletin No. 97. March 15, 1907. Price 30 cents	1,000
The Application of Vegetative Propagation to Leguminous Forage Plants. By J. M. Westgate, Assistant Agrostologist, and George W. Oliver, Plant Propagator. Pp. 7, pls. 3. Bulletin No. 102, Part IV. March 26, 1907. Price 5 cents	3,000
The Control of Texas Root-Rot of Cotton. By C. L. Shear, Pathologist, and George F. Miles, Scientific Assistant. Pp. 8, fig. 1. Bulletin No. 102, Part V. March 29, 1907. Price 5 cents	4,000
Relation of Sugar Beets to General Farming. By C. O. Townsend, Pathologist. Pp. iii, 399–410, pls. 3. (From Yearbook of the Department for 1903.) Reprint. April 18, 1907	2,000
Miscellaneous Papers. I. Cranberry Spraying Experiments in 1905. By C. L. Shear, Pathologist. II. The Wrapping of Apple Grafts and Its Relation to the Crown-Gall Disease. By Hermann Von Schrenk, Special Agent, and George C. Hedgcock, Assistant. III. Garlicky Wheat. By J. W. T. Duvel, Assistant. IV. Methods of Testing the Burning Quality of Cigar Tobacco. By Wightman W. Garner, Scientific Assistant. V. The Drug Known as Pinkroot. By W. W. Stockberger, Expert. VI. Orchard Grass. By R. A. Oakley, Assistant Agriculturist. VII. The Effect of Copper Upon Water Bacteria. By Karl F. Kellerman, Physiologist, and T. D. Beckwith, Scientific Assistant. VIII. Conditions Affecting Legume Inoculation. By Karl F. Kellerman, Physiologist, and T. R. Robinson, Assistant Physiologist. Pp. 83, pls. ix, figs. 6. Bulletin No. 100. April 25, 1907. Price 25 cents	2,000
Cultivation and Fertilization of Peach Orchards. By M. B. Waite, Pathologist in Charge of Investigations of Diseases of Orchard Fruits. Pp. iii, 607–626, pls. 6. (From Yearbook of the Department for 1902.) Reprint, May 17, 1907	2,000
Soy Bean Varieties. By Carleton R. Ball, Agronomist. Pp. 30, pls. 5, figs. 2. Bulletin No. 98. May 27, 1907. Price 15 cents	2,250
The Use of Feldspathic Rocks as Fertilizers. By Allerton S. Cushman, Assistant Director, Office of Public Roads. Pp. 32. Bulletin No. 104. May 28, 1907. Price 5 cents	2,150
Dry Farming in the Great Basin. By Carl S. Scofield, Agriculturist in Charge of Western Agricultural Extension Investigations. Pp. 43, pls. 4, figs. 8. Bulletin No. 103. May 29, 1907. Price 10 cents	2,500
The Relation of the Composition of the Leaf to the Burning Qualities of Tobacco. By Wightman W. Garner, Scientific Assistant, Tobacco Breeding Investigations. Pp. 27. Bulletin No. 105. June 8, 1907. Price 10 cents	2,000
The History of the Cowpea and Its Introduction into America. By W. F. Wight, Assistant Botanist. Pp. 21, pls. 3. Bulletin No. 102, Part VI. June 10, 1907. Price 10 cents	1,500
The Apple and How to Grow It. By G. B. Brackett, Pomologist. Pp. 32, figs. 10. Farmers' Bulletin No. 113. Reprint, July 20, 1906	20,000
Reprint, December 3, 1906	15,000
Reprint, April 6, 1907	15,000
Reprint, June 29, 1907	5,000
The Home Vineyard, with Special Reference to Northern Conditions. By W. H. Ragan, Special Agent. Pp. 24, figs. 15. Farmers' Bulletin No. 156. Reprint, July 20, 1906	15,000
Reprint, January 4, 1907	15,000
Reprint, April 30, 1907	10,000
Practical Suggestions for Fruit Growers. By H. P. Gould, Assistant Pomologist. Pp. 30, figs. 8. Farmers' Bulletin No. 161. Reprint, July 23, 1906	15,000
Reprint, November 8, 1906	10,000
Reprint, February 5, 1907	15,000
Reprint, June 29, 1907	5,000
Strawberries. By L. C. Corbett, Horticulturist. Pp. 24, figs. 15. Farmers' Bulletin No. 198. Reprint, July 24, 1906	20,000
Reprint, March 7, 1907	15,000

	Copies.
Beautifying the Home Grounds. By L. C. Corbett, Horticulturist. Pp. 24, figs. 8. Farmers' Bulletin No. 185. Reprint, July 27, 1906	20,000
Reprint, January 14, 1907	15,000
Reprint, May 2, 1907	15,000
Weeds Used in Medicine. By Alice Henkel, Assistant in Drug and Medicinal Plant Investigations. Pp. 46, figs. 31. Farmers' Bulletin No. 188. Reprint, July 27, 1906	10,000
Reprint, January 14, 1907	10,000
Reprint, April 26, 1907	10,000
Tomatoes. By L. C. Corbett, Horticulturist. Pp. 32, figs. 13. Farmers' Bulletin No. 220. Reprint, July 27, 1906	30,000
Reprint, January 10, 1907	15,000
Reprint, May 15, 1907	10,000
The Home Vegetable Garden. By W. R. Beattie, Assistant Horticulturist. Pp. 48, figs. 34, Farmers' Bulletin No. 255. Reprint, July 31, 1906	30,000
Reprint, November 6, 1906	20,000
Reprint, January 25, 1907	20,000
Reprint, March 20, 1907	20,000
Reprint, May 21, 1907	15,000
Cucumbers. By L. C. Corbett, Horticulturist, in Charge of Arlington Experimental Farm. Pp. 32, figs. 14. Farmers' Bulletin No. 254. Reprint, July 31, 1906	15,000
Reprint, January 18, 1907	15,000
Reprint, June 27, 1907	5,000
Corn Growing. By C. P. Hartley, Assistant in Physiology, Plant-Breeding Laboratory. Pp. 32, figs. 23. Farmers' Bulletin No. 199. Reprint, August 2, 1906	30,000
Reprint, December 20, 1906	30,000
Reprint, May 1, 1907	15,000
Annual Flowering Plants. By L. C. Corbett, Horticulturist. Pp. 48, figs. 55. Farmers' Bulletin No. 195. Reprint, August 3, 1906	20,000
Reprint, April 8, 1907	10,000
The Production of Good Seed Corn. By C. P. Hartley, Assistant in Physiology. With an Appendix on Selection and Care of Seed Corn. By Herbert J. Webber. Pp. 24, figs. 10. Farmers' Bulletin No. 229. Reprint, August 4, 1906	40,000
Reprint, October 2, 1906	20,000
Reprint, June 28, 1907	10,000
Varieties of Fruits Recommended for Planting. Compiled by W. H. Ragan, Expert in Pomological Nomenclature. Pp. 48, fig. 1. Farmers' Bulletin No. 208. Reprint, August 9, 1906	15,000
Reprint, December 12, 1906	15,000
Reprint, March 26, 1907	15,000
The Lawn. By L. C. Corbett, Horticulturist, in Charge of the Arlington Experimental Farm. Pp. 20, figs. 5. Farmers' Bulletin No. 248. Reprint, August 10, 1906	30,000
Reprint, April 17, 1907	10,000
Spraying for Cucumber and Melon Diseases. By W. A. Orton, Pathologist. Pp. 24, figs. 8. Farmers' Bulletin No. 231. Reprint, August 14, 1906	10,000
Reprint, January 4, 1906	10,000
Reprint, May 2, 1907	10,000
The Germination of Seed Corn. By J. W. T. Duvel, Assistant in the Seed Laboratory. Pp. 16, figs. 4. Farmers' Bulletin No. 253. Reprint, August 14, 1906	20,000
Reprint, January 14, 1907	15,000
Reprint, April 8, 1907	10,000
Fungicides and Their Use in Preventing Diseases of Fruits. By M. B. Waite. Pp. 32, figs. 17. Farmers' Bulletin No. 243. Reprint, August 14, 1906	10,000
Reprint, December 22, 1906	15,000
Weeds, and How to Kill Them. By Lyster H. Dewey, Assistant Botanist. Pp. 32, figs. 11. Farmers' Bulletin No. 28. Reprint, August 15, 1906	15,000
Reprint, November 26, 1906	15,000
Reprint, March 26, 1907	15,000

	Copies.
An Example of Model Farming. By W. J. Spillman, Agriculturist. Pp. 16, figs. 5. Farmers' Bulletin No. 242. Reprint, August 16, 1906	30,000
Reprint, January 8, 1907	20,000
Reprint, March 28, 1907	20,000
Reprint, June 28, 1907	10,000
Renovation of Worn-Out Soils. By W. J. Spillman, Agriculturist. Pp. 16. Farmers' Bulletin No. 245. Reprint, August 17, 1906	20,000
Reprint, January 30, 1907	10,000
Reprint, April 19, 1907	15,000
The Home Fruit Garden: Preparation and Care. By L. C. Corbett, Horticulturist. Pp. 16, figs. 6. Farmers' Bulletin No. 154. Reprint, August 21, 1906	15,000
Reprint, December 10, 1906	10,000
Reprint, March 27, 1907	15,000
Home Manufacture and Use of Unfermented Grape Juice. By George C. Husmann, Expert in Charge of Viticultural Investigations. Pp. 16, figs. 8. Farmers' Bulletin No. 175. Reprint, August 21, 1906	10,000
Reprint, December 1, 1906	10,000
Reprint, April 26, 1907	5,000
Alfalfa Seed. By Edgar Brown, Botanist in Charge of Seed Laboratory. Pp. 14, figs. 8. Farmers' Bulletin No. 194. Reprint, August 21, 1906	10,000
Reprint, December 3, 1906	10,000
Canadian Field Peas. By Thomas Shaw. Pp. 16, figs. 4. Farmers' Bulletin No. 224. Reprint, August 21, 1906	10,000
The Prevention of Stinking Smut of Wheat and Loose Smut of Oats. By Walter T. Swingle, Physiologist in Charge of Plant Life History Investigations. Pp. 16, figs. 7. Farmers' Bulletin No. 250. Reprint, August 21, 1906	5,000
Reprint, October 27, 1906	10,000
Reprint, March 22, 1907	15,000
Raspberries. By L. C. Corbett, Horticulturist. Pp. 38, figs. 25. Farmers' Bulletin No. 213. Reprint, August 27, 1906	20,000
The Control of the Codling Moth and Apple Scab. By C. L. Marlatt, of the Bureau of Entomology, and W. A. Orton, of the Bureau of Plant Industry. Pp. 24, figs. 9. Farmers' Bulletin No. 247. Reprint, August 30, 1906	30,000
Sweet Potatoes. By D. M. Nesbit. Pp. 40. Farmers' Bulletin No. 129. Reprint, September 22, 1906	10,000
Reprint, January 4, 1907	10,000
Reprint, May 2, 1907	10,000
Celery Culture. By W. R. Beattie, in Charge of Testing Gardens. Pp. 32, figs. 7. Farmers' Bulletin No. 148. Reprint, September 24, 1906	10,000
Reprint, March 18, 1907	10,000
Pruning. By L. C. Corbett, Horticulturist. Pp. 40, figs. 25. Farmers' Bulletin No. 181. Reprint, September 26, 1906	20,000
Reprint, March 30, 1907	10,000
Reprint, April 27, 1907	20,000
The Cultivation of Mushrooms. By B. M. Duggar. Pp. 24, figs. 10. Farmers' Bulletin No. 204. Reprint, September 27, 1906	10,000
Reprint, January 17, 1907	10,000
The School Garden. By L. C. Corbett, Horticulturist. Pp. 40, figs. 23. Farmers' Bulletin No. 218. Reprint September 28, 1906	15,000
Reprint, April 2, 1907	10,000
Winter Forage Crops for the South. By Carleton R. Ball, Assistant Agrostologist. Pp. 40, figs. 24. Farmers' Bulletin No. 147. Reprint, August 28, 1906	10,000
Reprint, April 22, 1907	10,000
The Propagation of Plants. By L. C. Corbett, Horticulturist. Pp. 24, figs. 22. Farmers' Bulletin No. 157. Reprint, October 1, 1906	15,000
Alfalfa Growing. By A. S. Hitchcock, in Charge of Alfalfa and Clover Investigations. Pp. 40, figs. 8. Farmers' Bulletin No. 215. Reprint, October 1, 1906	20,000
Reprint, March 27, 1907	15,000

	Copies.
Seed of Red Clover and Its Impurities. By Edgar Brown, Botanist in Charge of Seed Laboratory, and F. H. Hillman, Assistant Botanist. Pp. 24, figs. 39. Farmers' Bulletin No. 260. October 17, 1906	20,000
Reprint, November 8, 1906	5,000
Pineapple Growing. By Peter H. Rolfs, Pathologist, in Charge of Tropical Laboratory. Pp. 48, figs. 4. Farmers' Bulletin No. 140. Reprint, October 23, 1906	5,000
Pearl Millet. By Carleton R. Ball, Assistant, Agrostologist. Pp. 16, figs. 3. Farmers' Bulletin No. 168. Reprint, November 2, 1906	5,000
Saccharine Sorghums for Forage. By Carleton R. Ball, Assistant Agrostologist. Pp. 38, figs. 7. Farmers' Bulletin No. 246. Reprint, November 3, 1906	10,000
A Successful Hog and Seed-Corn Farm. By W. J. Spillman, Agriculturist in Charge of Farm Management Investigations. Pp. 16, figs. 5. Farmers' Bulletin No. 272. December 11, 1906	30,000
Reprint, April 2, 1907	20,000
Reprint, June 19, 1907	10,000
Forage-Crop Practices in Western Oregon and Western Washington. By Bryon Hunter, Assistant Agriculturist. Pp. 40, figs. 4. Farmers' Bulletin No. 271. January 4, 1907	20,000
Okra: Its Culture and Uses. By W. R. Beattie, Assistant Horticulturist. Pp. 16, figs. 8. Farmers' Bulletin No. 232. Reprint, January 4, 1907	15,000
Inoculation of Legumes. By Karl F. Kellerman, Physiologist in Charge of the Laboratory of Plant Physiology. Pp. 8. Farmers' Bulletin No. 240. Reprint, February 11, 1907	15,000
Flax Culture. Extracted from a Report of H. L. Bolley, Botanist of the North Dakota Agricultural Experiment Station. By William L. Marcy. Pp. 38, figs. 11. Farmers' Bulletin No. 274. March 5, 1907	30,000
Broom Corn. By Charles P. Hartley, Assistant in Physiology. Pp. 32, figs. 10. Farmers' Bulletin No. 174. Reprint, March 27, 1907	5,000
Leguminous Crops for Green Manuring. By C. V. Piper, Agrostologist in Charge of Forage Crop Investigations. Pp. 29, figs. 14. Farmers' Bulletin No. 278, April 6, 1907	30,000
A Method of Eradicating Johnson Grass. By J. S. Cates, Scientific Assistant, and W. J. Spillman, Agriculturist. Pp. 16, figs. 8. Farmers' Bulletin No. 279. April 9, 1907	10,000
The Advantage of Planting Heavy Cotton Seed. By Herbert J. Webber and E. B. Boykins. Pp. 16, figs. 6. Farmers' Bulletin No. 285. April 22, 1907	65,000
Reprint, May 25, 197	4,000
Lessons from the Grain-Rust Epidemic of 1904. By Mark Alfred Carleton, Cerealist. Pp. 24, figs. 6. Farmers' Bulletin No. 219. Reprint, April 24, 1907	10,000
A Profitable Tenant Dairy Farm. By Lyman Carrier, Scientific Assistant. Pp. 16, figs. 3. Farmers' Bulletin No. 280. April 26, 1907	30,000
Rape as a Forage Crop. By A. S. Hitchcock. Pp. 16, figs. 6. Farmers' Bulletin No. 164. Reprint, April 26, 1907	5,000
The Nonsaccharine Sorghums. By C. W. Warburton, Assistant Agriculturist. Pp. 30, figs. 9. Farmers' Bulletin No. 288. May 1, 1907	30,000
Celery. By W. R. Beattie, Assistant Horticulturist. Pp. 38, figs. 16. Farmers' Bulletin No. 282. May 4, 1907	30,000
Reprint, June 25, 1907	20,000
Beans. By L. C. Corbett, Horticulturist in Charge of the Arlington Experimental Farm. Pp. 30, figs. 12. Farmers' Bulletin No. 289. May 4, 1907	30,000
Comparative Value of Whole Cotton Seed and Cotton-Seed Meal in Fertilizing Cotton. By E. B. Boykin, Special Agent. Pp. 16, figs. 12. Farmers' Bulletin No. 286. May 9, 1907	65,000
Insect and Fungous Enemies of the Grape East of the Rocky Mountains. By A. L. Quaintance, of the Bureau of Entomology, and C. L. Shear, of the Bureau of Plant Industry. Pp. 48, figs. 35. Farmers' Bulletin No. 284. May 11, 1907	30,000
Evaporation of Apples. By H. P. Gould, Assistant Pomologist. Pp. 40, figs. 16. Farmers' Bulletin No. 291. May 23, 1907	30,000
Cost of Filling Silos. By Lyman Carrier, Scientific Assistant. Pp. 15, *figs. 3.* Farmers' Bulletin No. 292. May 23, 1907	15,000

	Copies.
Farm Practice in the Columbia Basin Uplands. By Bryon Hunter, Assistant Agriculturist. Pp. 32, figs. 9. Farmers' Bulletin No. 294. June 12, 1907	10,000
Diversified Farming Under the Plantation System. By D. A. Brodie, Assistant Agriculturist, and C. K. McClelland, Scientific Assistant. Pp. 16. Farmers' Bulletin 299. June 19, 1907	15,000
Some Important Grasses and Forage Plants for the Gulf Coast Region. By S. M. Tracy, Special Agent. Pp. 15, figs. 5. Farmers' Bulletin No. 300. June 29, 1907	10,000
Home Grown Tea. By George F. Mitchell, Scientific Assistant in Tea Culture Investigations. Pp. 16, figs. 4. Farmers' Bulletin No. 301. June 29, 1907	20,000

Agrostology.

Southern Forage Plants. Compiled from the publications of the Division of Agrostology. By F. Lamson-Scribner, Agrostologist. Pp. 48, figs. 14. Farmers' Bulletin No. 102. Reprint, August 11, 1906	5,000
Reprint, November 20, 1906	10,000
Meadows and Pastures: Formation and Cultivation in Middle Eastern States. By Jared G. Smith, Assistant Agrostologist. Pp. 30, figs. 9. Farmers' Bulletin No. 66. Reprint, August 24, 1906	10,000
Reprint, March 16, 1907	10,000
The Soy Bean as a Forage Crop. By Thomas A. Williams, Assistant Agrostologist. With an Appendix on the Soy Beans as Food for Man. By C. F. Langworthy, Ph. D., Office of Experiment Stations. Pp. 24, figs. 5. Farmers' Bulletin No. 58. Reprint, September 11, 1906	10,000
Reprint, April 1, 1907	10,000
Millets. By Thomas A. Williams, Assistant Agrostologist. Pp. 32, figs. 6. Farmers' Bulletin No. 101. Reprint, March 25, 1907	5,000

Botany.

The Farmer's Interest in Good Seed. By A. J. Pieters, in Charge of Pure-Seed Investigations. Pp. 24, figs. 7. Farmers' Bulletin No. 111. Reprint, September 24, 1906	10,000
Reprint, March 26, 1907	10,000
Reprint, June 29, 1907	5,000
Thirty Poisonous Plants of the United States. By V. K. Chestnut, Assistant Botanist. Pp. 32, figs. 24. Farmers' Bulletin No. 86. Reprint, October 20, 1906	15,000
Rice Culture in the United States. By Dr. S. A. Knapp. Pp. 30. Farmers' Bulletin No. 110. Reprint, November 27, 1906	5,000

Pomology.

Grape Growing in the South. By S. M. Tracy, M. S. Pp. 32, figs. 6. Farmers' Bulletin No. 118. Reprint, November 10, 1906	10,000

Division of Vegetable Physiology and Pathology.

The principal Diseases of Citrus Fruits in Florida. By Walter T. Swingle and Herbert J. Webber. Pp. 42, pls. 8, figs. 6. Bulletin No. 8. October 26, 1906. Reprint, price 10 cents	500
Potato Diseases and Their Treatment. By B. T. Galloway, Chief of the Division of Vegetable Physiology and Pathology. Pp. 16, figs. 4. Farmers' Bulletin No. 91. Reprint, August 13, 1906	10,000
Reprint, October 29, 1906	10,000
Reprint, February 19, 1907	10,000
Reprint, May 7, 1907	10,000
The Black Rot of the Cabbage. By Erwin F. Smith. Pp. 22, Farmers' Bulletin No. 68. Reprint, November 5, 1906	5,000
Peach Growing for Market. By Erwin F. Smith. Pp. 24, figs. 21. Farmers' Bulletin No. 33. Reprint, December 3, 1906	10,000
Reprint, March 25, 1907	10,000
Reprint, June 29, 1907	5,000

DIVISION OF PUBLICATIONS.

	Copies.
Monthly List of Publications, June, 1906. Pp. 4. Domestic	200,000
Monthly List of Publications, June, 1906. Pp. 4. Foreign	4,000
Monthly List of Publications, July, 1906. Pp. 4. Domestic	200,000
Monthly List of Publications, July, 1906. Pp. 4. Foreign	4,000
Monthly List of Publications, August, 1906. Pp. 4. Domestic	210,000
Monthly List of Publications, August, 1906. Pp. 4. Foreign	3,000
Monthly List of Publications, September, 1906. Pp. 4. Domestic	210,000
Monthly List of Publications, September, 1906. Pp. 4. Foreign	4,000
Monthly List of Publications, October, 1906. Pp. 4. Domestic	210,000
Monthly List of Publications, October, 1906. Pp. 4. Foreign	4,000
Monthly List of Publications, November, 1906. Pp. 4. Domestic	210,000
Monthly List of Publications, November, 1906, Pp. 4. Foreign	4,000
Monthly List of Publications, December, 1906. Pp. 4. Domestic	220,000
Monthly List of Publications, December, 1906. Pp. 4. Foreign	4,000
Monthly List of Publications, January, 1907. Pp. 4. Domestic	220,000
Monthly List of Publications, January, 1907. Pp. 4. Foreign	4,000
Monthly List of Publications, February, 1907. Pp. 4. Domestic	220,000
Monthly List of Publications, February, 1907. Pp. 4. Foreign	4,000
Monthly List of Publications, March, 1907. Pp. 6. Domestic	220,000
Monthly List of Publications, March, 1907, Pp. 6. Foreign	4,000
Monthly List of Publications, April 1907. Pp. 4. Domestic	220,000
Monthly List of Publications, April, 1907. Pp. 4. Foreign	4,000
Monthly List of Publications, May, 1907. Pp. 4. Domestic	220,000
Monthly List of Publications, May, 1907. Pp. 4. Foreign	4,000
A Directory for Farmers (corrected to April, 1906), with Weather Conditions, Crop Injuries, etc., for 1905. Pp. ii, 563–655, pls. 3, figs. 5. (From the Yearbook for 1905.) August 3, 1906	10,000
List of Bulletins and Circulars issued by the U. S. Department of Agriculture and available for free distribution in the United States. (Corrected to April 1, 1906.) Pp. 36. List 247. October 12, 1906	2,500
Publications for free Distribution. Circular No. 2. (Revised to October 1, 1906.) Pp. 48. December 7, 1907	3,000
Same, revised to January 15, 1907. Pp. 52. February 8, 1907	20,000
Farmers' Bulletin Subject Index. Pp. 13. Circular No. 4. December 14, 1906	3,000
Same, revised to include Bulletin 273. Pp. 15. February 28, 1907	2,000
Publications for sale. Circular No. 3. (Revised to October 1, 1906.) Geo. Wm. Hill, Editor and Chief. Pp. 79. December 29, 1906	10,000
Same, revised to June 1, 1907. Pp. 87. June 22, 1907	3,000
Report of the Editor for 1906. By Geo. Wm. Hill. Pp. 94. (From Annual Reports of the Department for 1906.) January 3, 1907	1,500
Historical Sketch of the U. S. Department of Agriculture; Its Objects and Present Organization. Compiled by Charles H. Greathouse. Pp. 97, frontispiece, pls. 2, figs. 9. Bulletin No. 3. (Second Revision.) March 22, 1907. Price 15 cents	2,000
Organization of Department of Agriculture, 1907. Circular No. 1. (Revised to January 1, 1907.) Pp. 37. April 1, 1907	2,500
Practical Suggestions for Farm Building. By George G. Hill. Pp. 48, figs. 28. Farmers' Bulletin No. 126. Reprint, August 13, 1906	20,000
Reprint, December 14, 1906	15,000
Reprint, April 19, 1907	15,000
Suggestions to Southern Farmers. Pp. 48. Farmers' Bulletin No. 98. Reprint, August 16, 1906	15,000
Reprint, April 23, 1907	15,000
Asparagus Culture. By R. B. Handy. Pp. 40, figs. 17. Farmers' Bulletin No. 61. Reprint, August 18, 1906	10,000
Reprint, March 22, 1907	10,000
Marketing Farm Produce. By George G. Hill. Pp. 32, fig. 7. Farmers' Bulletin No. 62. Reprint, August 3, 1906	10,000
Reprint, November 22, 1906	10,000
Reprint, March 7, 1907	10,000
Clearing New Land. By Franklin Williams, Jr. Pp. 24, figs. 7. Farmers' Bulletin No. 150. Reprint, October 24, 1906	5,000
Reprint, January 18, 1907	10,000

OFFICE OF PUBLIC ROADS.

	Copies.
Public Roads of Maine: Mileage and Expenditures in 1904. By Maurice O. Eldridge, Chief of Records. Pp. 2. Circular No. 51. July 10, 1906	10,000
Progress of Road Legislation and Road Improvement in the Different States. Pp. 624–627. (From the Yearbook for 1905.) August 8, 1906	5,000
The Construction of Sand-Clay and Burnt-Clay Roads. By Wm. L. Spoon, Road Expert. Pp. 19, pls. 4, figs. 5. Bulletin No. 27. September 15, 1906. Price 10 cents	5,000
Public Roads of New Mexico: Mileage and Expenditures in 1904. By Maurice O. Eldridge, Chief of Records. Pp. 2. Circular No. 52. September 19, 1906	10,000
Public Roads of Pennsylvania: Mileage and Expenditures in 1904. By Maurice O. Eldridge, Chief of Records. Pp. 4. Circular No. 53 October 9, 1906	10,000
Public Roads of North Carolina: Mileage and Expenditures in 1904. By Maurice O. Eldridge, Chief of Records. Pp. 4. Circular No. 45. Reprint, October 16, 1906	5,000
Public Roads of Montana: Mileage and Expenditures in 1904. By Maurice O. Eldridge, Chief of Records. Pp. 4. Circular No. 54. October 16, 1906	10,000
Public Roads of Wyoming: Mileage and Expenditures in 1904. By Maurice O. Eldridge, Chief of Records. Pp. 2. Circular No. 55. October 29, 1906	10,000
Public Roads of North Dakota: Mileage and Expenditures in 1904. By Maurice O. Eldridge, Chief of Records. Pp. 2. Circular No. 56. October 29, 1906	10,000
Public Roads of South Dakota: Mileage and Expenditures in 1904. By Maurice O. Eldridge, Chief of Records. Pp. 3. Circular No. 57. October 30, 1906	10,000
Tar and Oil for Road Improvement: Report of Progress of Experiments at Jackson, Tenn., Logan Waller Page, Director. Pp. 8. Circular No. 47. Reprint, November 17, 1906	2,000
Public Roads of Nevada: Mileage and Expenditures in 1904. By Maurice O. Eldridge, Chief of Records. Pp. 2. Circular No. 62. November 19, 1906	10,000
Public Roads of Idaho: Mileage and Expenditures in 1904. By Maurice O. Eldridge, Chief of Records. Pp. 2. Circular No. 64. November 19, 1906	10,000
Public Roads of South Carolina: Mileage and Expenditures in 1904. By Maurice O. Eldridge, Chief of Records. Pp. 4. Circular No. 60. November 26, 1906	10,000
Public Roads of Florida: Mileage and Expenditures in 1904. By Maurice O. Eldridge, Chief of Records. Pp. 3. Circular No. 59. November 27, 1906	10,000
Public Roads of Kentucky: Mileage and Expenditures in 1904. By Maurice O. Eldridge, Chief of Records. Pp. 4. Circular No. 58. November, 30, 1906	10,000
Public Roads of the State of Washington: Mileage and Expenditures in 1904. By Maurice O. Eldridge, Chief of Records. Pp. 2. Circular No. 39. Reprint, November 30, 1906	1,000
Public Roads of Kansas: Mileage and Expenditures in 1904. By Maurice O. Eldridge, Chief of Records. Pp. 4. Circular No. 63. December 1, 1906	10,000
Public Roads of Nebraska: Mileage and Expenditures in 1904. By Maurice O. Eldridge, Chief of Records. Pp. 4. Circular No. 61. December 11, 1906	10,000
Report of the Director of the Office of Public Roads for 1906. By Logan Waller Page, Director. Pp. 27. (From Annual Reports of the Department for 1906.) December 14, 1906	500
Public Roads of Iowa: Mileage and Expenditures in 1904. Logan Waller Page, Director. Pp. 3. Circular No. 43. Reprint, December 20, 1906	1,000
A Study of Rock Decomposition Under the Action of Water. By Allerton S. Cushman. Pp. 10, figs. 3. Circular No. 38. Reprint, December 24, 1906	2,500
Public Roads of Colorado: Mileage and Expenditures in 1904. By Maurice O. Eldridge, Chief of Records. Circular No. 65. Pp. 3. January 29, 1907	10,000

	Copies.
The Decomposition of the Feldspars. By Allerton S. Cushman, Assistant Director, Roads, and Prevost Hubbard, Assistant Chemist. Pp. 29, figs. 6. Bulletin No. 28. January 30, 1907. Price 10 cents	5,000
Public Roads of Arkansas; Mileage and Expenditures in 1904. By Maurice O. Eldridge, Chief of Records. Pp. 3. Circular No. 41. Reprint, February 11, 1907	3,000
Public Roads of Indiana; Mileage and Expenditures in 1904. By Maurice O. Eldridge, Chief of Records. Pp. 4. Circular No. 66. February 18, 1907	10,000
Public Roads of New Jersey; Mileage and Expenditures in 1904. By Maurice O. Eldridge, Chief of Records. Pp. 3. Circular No. 71. February 25, 1907	10,000
Public Roads of Utah; Mileage and Expenditures in 1904. By Maurice O. Eldridge, Chief of Records. Pp. 3. Circular No. 68. February 26, 1907	10,000
Public Roads of California; Mileage and Expenditures in 1904. By Maurice O. Eldridge, Chief of Records. Pp. 3. Circular No. 69. February 26, 1907	10,000
Public Roads of Oklahoma; Mileage and Expenditures in 1904. By Maurice O. Eldridge, Chief of Records. Pp. 3. Circular No. 67. February 26, 1907	10,000
Practical Road Building in Madison County, Tennessee. By Sam C. Lancaster, Chief Engineer Madison County Good Roads Commission. Pp. ii, 323–340, pls. 5, figs. 5. (From Yearbook of the Department for 1904.) Reprint, March 1, 1907	2,000
Public Roads of Illinois; Mileage and Expenditures in 1904. By Maurice O. Eldridge, Chief of Records. Pp. 4. Circular No. 70. March 11, 1907	10,000
Public Roads of Louisiana; Mileage and Expenditures in 1904. By Maurice O. Eldridge, Chief of Records. Pp. 3. Circular No. 73. March 15, 1907	10,000
The Selection of Materials for Macadam Roads. By Logan Waller Page, Expert in Charge of Road Material Laboratory, Division of Chemistry. Pp. iii, 349–356. (From Yearbook of the Department for 1900). Reprint, March 21, 1907	2,000
Public Roads of Georgia; Mileage and Expenditures in 1904. By Maurice O. Eldridge, Chief of Records. Pp. 4. Circular No. 75. March 22, 1907	10,000
Public Roads of Missouri; Mileage and Expenditures in 1904. By Maurice O. Eldridge, Chief of Records. Pp. 4. Circular No. 72. March 22, 1907	10,000
Public Roads of Mississippi; Mileage and Expenditures in 1904. By Maurice O. Eldridge, Chief of Records. Pp. 4. Circular No. 77. March 26, 1907	10,000
Public Roads of Ohio; Mileage and Expenditures in 1904. By Maurice O. Eldridge, Chief of Records. Pp. 4. Circular No. 75. March 28, 1907	10,000
Public Roads of West Virginia; Mileage and Expenditures in 1904. By Maurice O. Eldridge, Chief of Records. Pp. 4. Circular No. 78. April 3, 1907	10,000
Public Roads of New York; Mileage and Expenditures in 1904. By Maurice O. Eldridge, Chief of Records. Pp. 4. Circular No. 74. April 20, 1907	10,000
Public Roads of Wisconsin; Mileage and Expenditures in 1904. By Maurice O. Eldridge, Chief of Records. Pp. 3. Circular No. 79. April 26, 1907	10,000
Public Roads of Rhode Island; Mileage and Expenditures in 1904. By Maurice O. Eldridge, Chief of Records. Circular No. 83. May 2, 1907	10,000
Public Roads of Minnesota; Mileage and Expenditures in 1904. By Maurice O. Eldridge, Chief of Records. Pp. 4. Circular No. 80. May 4, 1907	10,000
Public Roads of Delaware; Mileage and Expenditures in 1904. By Maurice O. Eldridge, Chief of Records. Pp. 2. Circular No. 81. May 4, 1907	10,000

	Copies.
Public Roads of Michigan; Mileage and Expenditures in 1904. By Maurice O. Eldridge, Chief of Records. Pp. 4. Circular No. 82. May 4, 1907	10,000
Public Roads of Connecticut; Mileage and Expenditures in 1904. By Maurice O. Eldridge, Chief of Records. Pp. 2. Circular No. 86. May 4, 1907	10,000
Public Roads of Massachusetts; Mileage and Expenditures in 1904. By Maurice O. Eldridge, Chief of Records. Circular No. 84. May 13, 1907	10,000
Public Roads of Texas; Mileage and Expenditures in 1904. By Maurice O. Eldridge, Chief of Records. Pp. 6. Circular No. 85. May 13, 1907	10,000
Public Roads of Vermont; Mileage and Expenditures in 1904. By Maurice O. Eldridge, Chief of Records. Pp. 2. Circular No. 87. May 17, 1907	10,000
The Constructions of Macadam Roads. By Austin B. Fletcher, Special Agent. Pp. 56, pls. 6, figs. 3. Bulletin No. 29. June 29, 1907. Price 10 cents	12,000
Cement Mortar and Concrete: Preparation and Use for Farm Purposes. By Philip L. Wormeley, Jr., Testing Engineer. Pp. 32, figs. 14. Farmers' Bulletin No. 235. Reprint, July 30, 1906	20,000
Reprint, January 12, 1907	20,000
Reprint, April 1, 1907	15,000
The Corrosion of Fence Wire. By Allerton S. Cushman, Assistant Director. Pp. 32. Farmers' Bulletin No. 239. Reprint, August 17, 1906	15,000
Reprint, May 2, 1907	10,000
Good Roads for Farmers. By Maurice O. Eldridge, Acting Director, Office of the Public Road Inquiries. Pp. 48, figs. 49. Farmers' Bulletin No. 95. Reprint, August 21, 1906	10,000
Reprint, October 31, 1906	15,000
Reprint, March 23, 1907	10,000
Reprint, April 25, 1907	15,000
Reprint, June 29, 1907	5,000
Earth Roads. By Maurice O. Eldridge, Assistant Director. Pp. 24, figs. 20. Farmers' Bulletin No. 136. Reprint, September 29, 1906	15,000
Reprint, March 26, 1907	15,000

BUREAU OF STATISTICS.

Crop Reporter, Vol. 2, No. 8. (December, 1900.) Pp. 4. Reprint	300
Crop Reporter, Vol. 8, No. 3. (July, 1906.) Pp. 17–24	105,000
Crop Reporter, Vol. 8, No. 4. (August, 1906.) Pp. 25–32	105,000
Crop Reporter, Vol. 8, No. 5. (September, 1906.) Pp. 33–40	105,000
Crop Reporter, Vol. 8, No. 6. (October, 1906.) Pp. 41–48	105,000
Crop Reporter, Vol. 8, No. 7. (November, 1906.) Pp. 49–56	105,000
Crop Reporter, Vol. 8, No. 8. (December, 1906.) Pp. 57–64	120,000
Crop Reporter, Vol. 8, No. 8. Supplement. Pp. 65–72	120,000
Crop Reporter, Vol. 9, No. 1. (January, 1907.) Pp. 1–8	120,000
Crop Reporter, Vol. 9, No. 2. (February, 1907.) Pp. 9–16	120,000
Crop Reporter, Vol. 9, No. 3. (March, 1907.) Pp. 17–24	120,000
Index to Crop Reporter, Vols. 1 to 4. Pp. 17	250
Crop Reporter, Vol. 9, No. 4. (April, 1907.) Pp. 25–32	120,000
Crop Reporter, Vol. 9, No. 5. (May, 1907.) Pp. 33–40	120,000
Crop Reporter, Vol. 9, No. 6. (June, 1907.) Pp. 41–48	120,000
Meat Animals and Packing-House Products Imported into Eleven Principal Countries, 1895–1904. Prepared by the Division of Foreign Markets. Pp. 92. Bulletin No. 40. Reprint, July 12, 1906. Price 5 cents	2,500
Statistical Matter Relating to Principal Crops and Farm Animals, Freight Rates, Exports, etc., of the United States, 1905. Pp. 656–782. (From Yearbook of the Department for 1905.) July 28, 1906	10,000
Changes in Farm Values, 1900–1905. By George K. Holmes, Chief of Division of Foreign Markets. Pp. 46. Bulletin No. 43. August 23, 1906. Price 10 cents	49,500
Exports of Farm and Forest Products, 1903–1905. By Countries to which Consigned. Compiled by the Division of Foreign Markets. Pp. 72. Bulletin No. 46. September 24, 1906. Price 10 cents	4,500

	Copies.
Trade with Noncontiguous Possessions in Farm and Forest Products, 1903–1905. Compiled by the Division of Foreign Markets. Pp. 45. Bulletin No. 47. September 24, 1906. Price 10 cents	4,500
Local Conditions as Affecting Farm Values, 1900–1905. By George K. Holmes, Chief of Division of Foreign Markets. Pp. 88. Bulletin No. 44. September 28, 1906. Price 10 cents	49,500
Imports of Farm and Forest Products, 1903–1905. By Countries from which Consigned. Compiled by the Division of Foreign Markets. Pp. 62. Bulletin No. 45. September 28, 1906. Price 10 cents	4,500
Russia's Wheat Surplus; Conditions under which it is Produced. By I. M. Rubinow, Economic Expert, Division of Foreign Markets. Pp. 103, pls. 4, fig. 1. Bulletin No. 42. October 9, 1906. Price 20 cents	4,500
The Cost of Producing Farm Products. Methods of Investigation. Cost of Growing Minnesota Field Crops, 1902, 1903, 1904. By Willet M. Hays and Edward C. Parker. Pp. 90, pls. 4, figs. 11. Bulletin No. 48. December 5, 1906. Price 15 cents	5,000
Report of the Chief of the Bureau of Statistics for 1906. By Victor H. Olmsted. (From Annual Reports of the Department for 1906.) Pp. 15. December 15, 1906	500
Costs of Hauling Crops from Farms to Shipping Points. By Frank Andrews, Expert in Transportation, Division of Foreign Markets. Pp. 63. Bulletin No. 49. February 28, 1907. Price 10 cents	5,000
Hops in Principal Countries: Their Supply, Foreign Trade, and Consumption, with Statistics of Beer Brewing. By Eugene Merritt, Scientific Assistant, Division of Foreign Markets. Pp. 34, fig. 1. Bulletin No. 50. April 27, 1907. Price 10 cents	5,000

BUREAU OF SOILS.

Calcium Sulphate in Aqueous Solutions: A Contribution to the Study of Alkali Deposits. By Frank K. Cameron and James M. Bell. Pp. 71, figs. 11. Bulletin No. 33. July 3, 1906. Price 10 cents	2,500
Reprint, November 20, 1906	1,000
Dark Fire-cured Tobacco of Virginia and the Possibilities for Its Improvement. By George T. McNess and E. H. Mathewson, Tobacco Experts. Pp. iii, 219–230, pls. 4, fig. 1. (From Yearbook of the Department for 1905.) July 18, 1906	300
Reprint, November 19, 1906	300
Reprint, February 11, 1907	2,000
The Wire-Basket Method for Determining the Manurial Requirements of Soils. By Frank D. Gardner, in Charge of Soils Management. Pp. 6, figs 2. Circular No. 18. Reprint, July 20, 1906	2,000
Alkali Soils of the United States. A Review of Literature and Summary of Present Information. By Clarence W. Dorsey. Pp. 196, figs. 13. Bulletin No. 35. September 5, 1906. Price 25 cents	1,000
Colorimetric, Turbidity, and Titration Methods Used in Soil Investigations. By Oswald Schreiner and George H. Failyer. Pp. 60, pl. 1, fig. 1. Bulletin No. 31. Reprint, December 1, 1906. Price 5 cents	1,000
Report of the Chief of the Bureau of Soils for 1906. By Milton Whitney. Pp. 31. (From Annual Reports of the Department for 1906.) December 18, 1906	200
Reprint, February 2, 1907	2,300
Experiments in Growing Cuban Seed Tobacco in Alabama. By Geo. T. McNess and Lewis W. Ayer. Pp. 32, pls. 3. Bulletin No. 37. December 21, 1906. Price 10 cents	5,000
The Absorption of Phosphates and Potassium by Soils. By Oswald Schreiner and George H. Failyer. Pp. 39, figs. 6. Bulletin No. 32. Reprint, February 4, 1907. Price 10 cents	500
Studies on the Movement of Soil Moisture. By Edgar Buckingham. Pp. 61, figs. 23. Bulletin No. 38. February 13, 1907. Price 10 cents	2,500
Effects of Shading on Soil Conditions. By J. B. Stewart. Pp. 19, pls. 4, figs. 7. Bulletin No. 39. February 13, 1907. Price 10 cents	2,500
The Action of Water and Aqueous Solutions Upon Soil Phosphates. By Frank K. Cameron and James M. Bell. Pp. 58, figs. 5. Bulletin No. 41. June 21, 1907. Price 10 cents	2,500
Some Factors Influencing Soil Fertility. By Oswald Schreiner and Howard S. Reed. Pp. 40, pls. 3. Bulletin No. 40. June 29, 1907. Price 10 cents	2,500

	Copies.
Further Studies on the Properties of Unproductive Soils. By Burton Edward Livingston, Assisted by Charles A. Jensen, J. F. Breazeale, F. R. Pember, and J. J. Skinner. Pp. 71, pls. 7. Bulletin No. 36. June 29, 1907. Price 15 cents	2,500
Soil Fertility. An Address Delivered Before the Rich Neck Farmers' Club of Queen Anne County, Maryland. By Milton Whitney, Chief. Pp. 40, figs. 2. Farmers' Bulletin No. 257. Reprint, July 26, 1906	20,000
Reprint, November 5, 1906	20,000
Reprint, March 21, 1907	20,000
Reprint, June 28, 1907	10,000
The Culture of Tobacco. By Otto Carl Butterweck. Pp. 24. Farmers' Bulletin No. 82. Reprint, August 14, 1906	10,000
Reprint, March 19, 1907	10,000
Methods of Curing Tobacco. (Second Revision.) By Milton Whitney, Chief. Pp. 24. Farmers' Bulletin No. 60. Reprint, September 22, 1906	10,000
Reprint, April 2, 1907	10,000
Management of Soils to Conserve Moisture, with Special Reference to Semiarid Conditions. By George H. Failyer. Pp. 32, figs. 7. Farmers' Bulletin No. 266. November 23, 1906	30,000
Reprint, April 26, 1907	15,000
Tobacco Soils. By Milton Whitney, Chief. Pp. 24, fig. 1. Farmers' Bulletin No. 83. Reprint, December 14, 1906	10,000
Reprint, May 11, 1907	10,000

WEATHER BUREAU.

Monthly Weather Review (a summary by months of weather conditions throughout the United States, based upon reports of nearly 3,000 regular and voluntary observers). Quarto, price 20 cents; $2.50 per year.	
Vol. XXXIV. No. 5. May, 1906. Pp. 201–253, charts 15, figs. 13	5,200
Vol. XXXIV. No. 6. June, 1906. Pp. 254–306, charts	5,200
Vol. XXXIV. No. 7. July, 1906. Pp. 307–356, charts 8, figs. 15	5,200
Vol. XXXIV. No. 8. August, 1906. Pp. 357–404, charts 6, figs. 9	5,150
Vol. XXXIV. No. 9. September, 1906. Pp. 405–452, charts 7, figs. 9	5,150
Vol. XXXIV. No. 10. October, 1906. Pp. 453–504, charts 7, figs. 7	5,150
Vol. XXXIV. No. 11. November, 1906. Pp. 505–555, charts 14, figs. 15	5,150
Vol. XXXIV. No. 12. December, 1906. Pp. 557–607, charts	5,150
Vol. XXXIV. No. 13. Annual Summary. Pp. xvi, 609–628, charts 6	5,150
Vol. XXXV. No. 1. January, 1907. Pp. 1–49, charts 10	5,150
Vol. XXXV. No. 2. February, 1907. Pp. 51–102, charts 9	5,100
Vol. XXXV. No. 3. March, 1907. Pp. 103–154, charts 11	5,100
Vol. XXXV. No. 4. April, 1907. Pp. 155–205, charts 8	5,100
Studies on the Diurnal Periods in the Lower Strata of the Atmosphere. By Frank Hagar Bigelow, M. A. L. H. D., Professor of Meteorology. (From Monthly Weather Review for February, March, April, May, July, and August, 1905.) Pp. 54, figs. 71. July 7, 1906. Reprint	1,500
Extension of the River and Flood Service of the Weather Bureau. By H. C. Frankenfield, Professor of Meteorology. Pp. ii, 231–240, pl. 1. (From Yearbook of the Department for 1905.) July 18, 1906	200
Report of the Chief of the Weather Bureau, 1904–1905. Pp. xxiv, 1–384. July 21, 1906	4,000
Cold Waves and Frost in the United States. By Elwood B. Garriott, Professor of Meteorology. Pp. 22, charts 328. Bulletin P. Price 30 cents. August 14, 1906	2,000
Climatology of the United States. By Alfred Judson Henry, Professor of Meteorology. Pp. 1012, pls. 34. Bulletin Q. Price $10. November 30, 1906	1,000
Report of the Chief of the Weather Bureau for 1906. By Willis L. Moore. Pp. 23. (From Annual Reports of the Department for 1906.) December 14, 1906	1,000

	Copies.
National Weekly Weather Bulletins, reporting temperature and rainfall, with a summary of weather conditions by sections throughout the United States.	
Bulletin No. 16, July 2, 1906	2,500
Bulletin No. 17, July 9, 1906	2,500
Bulletin No. 18, July 16, 1906	2,500
Bulletin No. 19, July 23, 1906	2,500
Bulletin No. 20, July 30, 1906	2,500
Bulletin No. 21, August 6, 1906	2,500
Bulletin No. 22, August 13, 1906	2,500
Bulletin No. 23, August 20, 1906	2,500
Bulletin No. 24, August 27, 1906	2,500
Bulletin No. 25, September 3, 1906	2,500
Bulletin No. 26, September 10, 1906	2,500
Bulletin No. 27, September 17, 1906	2,500
Bulletin No. 28, September 24, 1906	2,500
Bulletin No. 29, October 1, 1906	2,475
Bulletin No. 30, November 5, 1906	2,850
Bulletin No. 31, December 3, 1906	2,500
Bulletin No. 1, January, 1907	2,900
Bulletin No. 2, February, 1907	2,850
Bulletin No. 3, March, 1907	2,900
Bulletin No. 4, April 8, 1907	2,900
Bulletin No. 5, April 15, 1907	2,900
Bulletin No. 6, April 22, 1907	2,900
Bulletin No. 7, April 29, 1907	2,900
Bulletin No. 8, May 6, 1907	2,900
Bulletin No. 9, May 13, 1907	2,635
Bulletin No. 10, May 20, 1907	2,500
Bulletin No. 11, May 27, 1907	2,500
Bulletin No. 12, June 3, 1907	2,200
Bulletin No. 13, June 10, 1907	2,200
Bulletin No. 14, June 17, 1907	2,200
Bulletin No. 15, June 24, 1907	2,200
Snow and Ice Bulletins.	
December 4, 1906	1,850
December 18, 1906	1,850
January 2, 1907	1,600
January 8, 1907	1,600
January 22, 1907	1,660
February 5, 1907	1,600
February 12, 1907	1,600
February 19, 1907	1,600
February 26, 1907	1,600
March 5, 1907	1,650
March 12, 1907	1,650
March 19, 1907	1,650
March 26, 1907	1,650
Daily Weather Map (showing weather conditions throughout the United States and giving forecasts of probable changes).	
July, 1906	45,137
August, 1906	45,135
September, 1906	45,138
October, 1906	44,517
November, 1906	44,500
December, 1906	45,533
January, 1907	47,800
February, 1907	47,500
March, 1907	48,105
April, 1907	46,200
May, 1907	46,250
June, 1907	46,230
Notes on Frost. By E. B. Garriott, Professor of Meteorology. Pp. 24, *Farmers' Bulletin No. 104.* Reprint, October 25, 1906	5,000
Reprint, March 28, 1907	5,000
Protection of Food Products from Injurious Temperatures. By H. E. *Williams*, Chief Clerk. Pp. 24. Farmers' Bulletin No. 125. Reprint. *March 27, 1907*	5,000

APPENDIX B.

REPORT IN DETAIL OF PUBLICATIONS OF THE U. S. DEPARTMENT OF AGRICULTURE RECEIVED AND DISTRIBUTED DURING THE FISCAL YEAR ENDED JUNE 30, 1907, THE PUBLICATION OF WHICH IS PROVIDED FOR BY LAW.

[NOTE.—The publications of the Weather Bureau are not distributed from the Division of Publications, but by an official in that Bureau specially charged with such work, and directed by the order of the Secretary of Agriculture, dated March 29, 1897, to report to the chief of this Division. A list of Weather Bureau publications is given in separate tables.]

Publications other than Farmers' Bulletins received and distributed from July 1, 1906, to June 30, 1907.

Publications.	Received.	Distributed.[a]
Publications printed prior to July 1, 1906, of which no reprints were had during this year	[b] 889,708	523,026
Report of the Appointment Clerk, 1906	500	500
Report of the Division of Accounts and Disbursements, 1906	100	100
Report of the expenditures of the Department of Agriculture, 1906	75	75
BUREAU OF ANIMAL INDUSTRY.		
Report of Chief, 1906	2,500	1,731
Bulletin No. 27, revised	1,500	869
Bulletin No. 38	3,500	3,320
Bulletin No. 39, part 14	2,000	1,370
Bulletin No. 39, part 15	2,000	1,200
Bulletin No. 39, part 16	2,000	1,505
Bulletin No. 39, part 17	2,000	600
Bulletin No. 68 (reprint)	1,000	170
Bulletin No. 75 (reprint)	1,000	200
Bulletin No. 78 (reprint)	1,500	920
Bulletin No. 83	7,000	6,752
Bulletin No. 85	5,700	5,200
Bulletin No. 87	2,500	2,380
Bulletin No. 88	3,000	2,800
Bulletin No. 89	5,000	4,830
Bulletin No. 90	2,500	2,250
Bulletin No. 91	3,000	2,930
Bulletin No. 92	3,500	3,000
Bulletin No. 93	4,000	3,500
Bulletin No. 94	2,700	2,420
Bulletin No. 95	2,000	1,550
Bulletin No. 96	3,500	3,027
Bulletin No. 97	5,600	4,474
Bulletin No. 98	3,000	2,077
Bulletin No. 99	4,000	3,200
Bulletin No. 100	2,500	1,350
Circular No. 1 (reprint)	2,000	100
Circular No. 23 (reprint)	10,000	10,000
Circular No. 64 (reprint)	1,500	1,305
Circular No. 67 (reprint)	2,000	1,674
Circular No. 78 (reprint)	1,000	1,219
Circular No. 79 (reprint)	1,000	968
Circular No. 82 (reprint)	500	353
Circular No. 83 (reprint)	1,000	1,162
Circular No. 84 (reprint)	800	800
Circular No. 85 (reprint)	500	396
Circular No. 89 (reprint)	1,000	1,650
Circular No. 93 (reprint)	500	500
Circular No. 95 (reprint)	2,000	2,000
Circular No. 96 (reprint)	5,000	4,125

[a] Where the number distributed is greater than the number received, the difference is accounted for by the number on hand at the beginning of the year.
[b] On hand, miscellaneous publications printed prior to July 1, 1904.

Publications other than Farmers' Bulletins received and distributed from July 1, 1906, to June 30, 1907—Continued.

Publications.	Received.	Distributed.
BUREAU OF ANIMAL INDUSTRY—continued.		
Circular No. 97	57,000	55,200
Circular No. 98	3,500	3,036
Circular No. 99	4,500	2,720
Circular No. 100	12,000	9,431
Circular No. 101	11,000	10,674
Circular No. 102	3,000	3,000
Circular No. 103	3,000	2,052
Circular No. 104	1,300	1,300
Circular No. 105	1,500	1,500
Circular No. 106	3,000	2,675
Circular No. 107	4,000	3,010
Circular No. 108	3,500	3,500
Circular No. 109	4,000	4,000
Circular No. 110	10,000	9,015
Circular No. 111	10,000	3,100
Twenty-second Annual Report, 1905	5,000	4,217
The American Saddle Horse (reprint from Nineteenth Annual Report)	1,000	514
Poultry Management (reprint from Twenty-second Annual Report)	1,000	1,000
Government Encouragement of Imported Breeds of Horses (reprint from Twenty-second Annual Report)	500	300
Notes on Cattle Tick and Texas Fever (reprint from Twenty-second Annual Report)	500	270
The Production and Consumption of Meat, and Prices, Movement, and Registration of Live Stock in the United States (reprint from Twenty-second Annual Report)	500	241
Soft-Cheese Studies in Europe (reprint from Twenty-second Annual Report)	500	159
Press Bulletin No. 5	2,000	2,000
Press Bulletin No. 6	1,000	1,000
Press Bulletin No. 7	1,300	1,300
Press Bulletin No. 9	1,200	1,200
Press Bulletin No. 10	1,200	1,200
Directory of Establishments	1,500	1,500
Do	1,500	1,500
Directory by Numbers of Establishments Having Inspection Dec. 20, 1906	2,000	2,000
Directory by Numbers of Establishments Having Inspection Dec. 20, 1906	2,000	2,000
Directory by Stations of Establishments Having Inspection Dec. 20, 1906	5,000	5,000
Directory by Stations of Establishments Having Inspection Feb. 5, 1907	6,500	6,500
Meat Inspection Directory by Numbers and Stations May 6, 1907	5,500	5,500
Address List of Inspectors and Others, Jan. 15, 1907	3,000	3,000
Address List of Inspectors and Others, Nov. 20, 1907	2,500	2,500
Address List of Inspectors and Others	2,500	2,500
Do	1,000	1,000
Order 136	2,000	2,000
Order 137	35,000	33,100
Amendment No. 1 to Order 137	35,000	29,000
Amendment No. 2 to Order 137	31,000	30,100
Amendment No. 3 to Order 137	26,000	20,000
Amendment No. 4 to Order 137	26,000	20,000
Amendment No. 5 to Order 137	13,000	12,100
Amendment No. 6 to Order 137	13,000	12,000
Amendment No. 7 to Order 137	13,000	9,700
Amendment No. 8 to Order 137	16,000	11,100
Amendment No. 9 to Order 137	10,500	10,500
Amendment No. 10 to Order 137	15,000	15,000
Order No. 139	5,500	3,800
Order No. 140	2,700	1,840
Order No. 141	2,700	1,841
Order No 142	4,500	1,500
Order No. 143	10,000	6,400
Order No. 144, Rule 1, revision 2	10,000	5,200
Amendment No. 1 to Order 144	5,000	4,000
Amendment No. 2 to Order 144	7,500	2,900
Order No. 145, Rule 2, revision 1	10,500	5,600
Order No. 146, Rule 3, revision 1	10,500	6,700
Order No. 147	3,000	2,740
Order No. 148	1,000	700
1 A, Meat Inspection Rulings	10,500	7,700
Instructions Concerning Trade Labels, Under the Meat Inspection Law and Regulations	23,000	20,200
Amendment No. 8 to Rule 1, revision 1	7,000	7,000
Amendment No. 9 to Rule 1, revision 1	3,500	3,500
Instructions Concerning Stocks of Meat Food Products on hand Oct. 1, 1906	1,500	1,500
Instructions Concerning the Preparation and Application of Dips, Dippings of Sheep and Cattle for Scabies	5,000	5,000
Service Announcements, May 15, 1907	2,500	2,500
Service Announcements, June 15, 1907	3,200	3,200
Meat Inspection Amendment, Approved June 30, 1906	3,000	3,000
An Outline of the Work of the Dairy Division, Nov. 7, 1906	5,000	5,000
An Outline of the Work of the Dairy Division, February, 1907	5,000	5,000
An Outline of the Work of the Animal Husbandry Office	2,500	2,500
Instructions Relating to the Use of New and Revised I. D. Forms	5,000	5,000

Publications other than Farmers' Bulletins received and distributed from July 1, 1906, to June 30, 1907—Continued.

Publications.	Received.	Distributed.
BUREAU OF ANIMAL INDUSTRY—continued.		
Decisions of Attorney-General in Regard to Inspection of Imported Meat and Meat Food Products	5,000	5,000
Supplemental Instructions Relating to the Use of New and Revised I. D. Forms	4,000	4,000
Order 92	500	500
Order 127	1,000	1,000
Instruction Concerning Stocks of Meat Food Products	750	750
Publications of Interest to Dairymen	5,000	5,000
List of Publications of the Dairy Division	5,000	5,000
BUREAU OF BIOLOGICAL SURVEY.		
Report of Chief, 1906	1,500	1,087
Bulletin No. 21 (reprint)	1,000	100
Bulletin No. 26	5,000	4,417
Bulletin No. 27	5,000	3,712
Circular No. 17 (reprint)	500	1,332
Circular No. 53	3,000	1,750
Circular No. 54	6,000	5,026
Circular No. 55	45,000	40,600
Circular No. 56	222,000	203,894
Circular No. 57	112,000	102,800
Circular No. 58	7,500	5,500
Circular No. 59	3,000	3,000
Circular No. 60	1,000	570
North American Fauna, No. 26	3,500	1,800
BUREAU OF CHEMISTRY.		
Report of the Chemist, 1906	800	635
Bulletin No. 46, revised	500	247
Bulletin No. 69, part 9	3,000	1,740
Bulletin No. 84, part 2	1,000	1,000
Bulletin No. 98	1,000	1,000
Bulletin No. 99	2,000	1,500
Report on Insecticides, Fungicides, and Disinfectants	50	50
Bulletin No. 101	2,800	2,400
Bulletin No. 102	4,000	2,900
Bulletin No. 103	3,500	1,500
Bulletin No. 104	2,500	2,050
Report on Fats and Oils (reprint from Chemistry Bul. 105)	100	100
Report on Determination of Water in Foods (reprint from Chemistry Bul. 105)	100	100
Circular No. 12	250	200
Circular No. 15	500	500
Circular No. 16	2,500	1,587
Circular No. 25	1,300	910
Circular No. 28	2,000	1,400
Circular No. 29	2,000	1,300
Circular No. 30	2,200	1,706
Circular No. 31	7,000	5,100
Circular No. 32	2,100	1,875
Circular No. 33	3,500	2,783
Circular No. 34	3,000	3,000
Food Inspection Decisions, Nos. 40–43	25,000	21,000
Food Inspection Decisions, Nos. 44–45	24,000	24,000
Food Inspection Decisions, No. 46, as amended	10,000	8,200
Food Inspection Decisions, Nos. 46–48	24,000	22,000
Food Inspection Decisions, Nos. 49–53	15,000	15,000
Food Inspection Decisions, Nos. 54–59	15,000	15,000
Food Inspection Decisions, Nos. 60–64	15,000	13,000
Food Inspection Decisions, No. 65	20,000	13,000
Food Inspection Decisions, Nos. 66–68	15,000	11,000
Food Inspection Decisions, No. 69	15,000	12,000
Food Inspection Decisions, Nos. 70–72	15,000	15,000
Food Inspection Decisions, No. 73	20,000	16,000
Inspection of Dairy Products Factories, Including Creameries	200	200
Inspection of Food and Drug Factories	500	500
Inspectors in Charge, Oct. 30, 1906	500	500
BUREAU OF ENTOMOLOGY.		
Report of the Entomologist, 1906	500	500
Bulletin No. 58, part 2	3,000	2,315
Bulletin No. 58, part 3	2,000	1,400
Bulletin No. 59	3,000	2,100
Bulletin No. 60	1,000	1,000
Bulletin No. 61	1,000	1,000
Bulletin No. 62	3,000	2,770
Bulletin No. 63, part 1	3,000	2,800

Publications other than Farmers' Bulletins received and distributed from July 1, 1906, to June 30, 1907—Continued.

Publications.	Received.	Distributed.
BUREAU OF ENTOMOLOGY—continued.		
Bulletin No. 63, part 2	3,000	2,450
Bulletin No. 63, part 3	2,000	2,000
Bulletin No. 63, part 4	2,000	1,800
Bulletin No. 63, part 5	2,000	1,550
Bulletin No. 63, part 6	2,000	2,000
Bulletin No. 63, part 7	2,000	1,280
Bulletin No. 64, part 1	2,000	1,800
Bulletin No. 64, part 2	2,000	1,770
Bulletin No. 64, part 3	2,000	1,600
Bulletin No. 65	3,000	3,000
Bulletin No. 66, part 1	2,000	1,675
Bulletin No. 66, part 2	2,000	1,700
Bulletin No. 68, part 1	2,000	1,746
Bulletin No. 69	3,000	2,480
Bulletin No. 70	3,000	2,600
Circular No. 1 (reprint)	250	646
Circular No. 3 (reprint)	750	750
Circular No. 4 (reprint)	1,000	760
Circular No. 5 (reprint)	1,000	1,000
Circular No. 8 (reprint)	1,000	601
Circular No. 10 (reprint)	1,000	700
Circular No. 12 (reprint)	250	1,650
Circular No. 13 (reprint)	2,000	1,435
Circular No. 14 (reprint)	300	148
Circular No. 15 (reprint)	2,250	1,972
Circular No. 17 (reprint)	250	250
Circular No. 18 (German edition)	100	100
Circular No. 19 (reprint)	3,000	2,084
Circular No. 20 (reprint)	3,000	3,000
Circular No. 25 (reprint)	1,000	658
Circular No. 30 (reprint)	250	250
Circular No. 33 (reprint)	250	250
Circular No. 34	1,000	834
Circular No. 35	250	250
Circular No. 40	250	415
Circular No. 42 (fourth edition)	5,000	2,245
Circular No. 43	1,000	2,700
Circular No. 46	9,000	4,300
Circular No. 47	3,000	2,660
Circular No. 48	1,000	817
Circular No. 54	2,500	1,600
Circular No. 55	1,000	500
Circular No. 60	1,000	992
Circular No. 65	1,000	400
Circular No. 71	7,500	5,374
Circular No. 73	3,000	892
Circular No. 75	3,000	1,300
Circular No. 76	3,000	2,310
Circular No. 77	3,000	3,000
Circular No. 78	3,000	2,450
Circular No. 79	5,000	4,500
Circular No. 80	5,000	4,010
Circular No. 81	8,000	4,000
Circular No. 82	3,000	1,200
Circular No. 83	3,000	2,500
Circular No. 84	3,000	2,784
Circular No. 85	5,000	3,389
Circular No. 86	3,000	2,900
Circular No. 87	3,000	2,746
Circular No. 88	3,000	1,900
Circular No. 89	12,500	11,240
Circular No. 90	3,000	2,000
Sulphur Dioxide as an Insecticide. (Reprint from Entomological Bul. No. 60)	500	500
National Control of Introduced Insect Pests. (Reprint from Entomological Bul. 60)	500	500
Report of Committee on Nomenclature. (Reprint, Entomological Bul. No. 60)	500	500
The Scope and Status of Economic Entomology. (Reprint from Entomological Bul. No. 60)	100	100
The Corn Root-Aphis and Its Attendant Ant. (Reprint from Entomological Bul. No. 60)	200	200
Some Observations on the Spined Soldier Bug. (Reprint from Entomological Bul. No. 60)	200	200
State and Territorial Laws Relative to Foul Brood. (Reprint from Entomological Bul. No. 61)	500	500
Bulletin No. 12, part 2 (Technical Series)	2,000	1,600
Bulletin No. 12, part 3 (Technical Series)	2,000	1,900
Bulletin No. 13	2,000	1,850
Bulletin No. 14	3,000	2,050

Publications other than Farmers' Bulletins received and distributed from July 1, 1906, to June 30, 1907—Continued.

Publications.	Received.	Distributed.
FOREST SERVICE.		
Report of the Forester, 1905 (reprint)	1,000	840
Report of the Forester, 1906	2,500	2,500
Bulletin No. 10 (reprint)	2,000	2,693
Bulletin No. 17 (reprint)	1,000	750
Bulletin No. 28 (reprint)	1,000	650
Bulletin No. 31 (reprint)	500	326
Bulletin No. 33 (reprint)	500	650
Bulletin No. 36, part 1	2,000	3,200
Bulletin No. 43	500	2,130
Bulletin No. 46	500	550
Bulletin No. 56	500	459
Bulletin No. 58, revised	1,500	500
Bulletin No. 67	1,200	1,200
Bulletin No. 69	9,000	8,122
Bulletin No. 70	1,000	1,000
Bulletin No. 71	1,000	1,000
Bulletin No. 72	14,000	12,900
Bulletin No. 74	8,000	6,715
Circular No. 12 (reprint)	2,000	1,880
Circular No. 15 (reprint)	1,500	800
Circular No. 21 (reprint)	12,000	7,600
Circular No. 22 (reprint)	247,000	254,400
Circular No. 25 (reprint)	2,000	2,992
Circular No. 34	3,000	1,075
Circular No. 35	10,000	9,300
Circular No. 36	300,000	300,000
Circular No. 38	15,000	8,600
Circular No. 39	10,000	5,700
Circular No. 40	10,000	6,400
Circular No. 41	10,000	6,700
Circular No. 42	9,000	8,660
Circular No. 43	11,500	11,100
Circular No. 44	10,000	9,200
Circular No. 45	33,000	29,510
Circular No. 46	8,000	7,452
Circular No. 47	11,500	11,100
Circular No. 48	13,000	11,300
Circular No. 49	21,000	20,661
Circular No. 50	8,500	8,200
Circular No. 51	7,500	7,200
Circular No. 52	40,000	36,300
Circular No. 53	9,500	9,300
Circular No. 54	8,000	8,000
Circular No. 55	7,000	6,200
Circular No. 56	9,000	8,130
Circular No. 57	8,000	7,200
Circular No. 58	8,000	7,700
Circular No. 59	8,000	7,750
Circular No. 60	8,000	4,700
Circular No. 61	11,000	10,200
Circular No. 62	9,000	8,050
Circular No. 63	9,000	8,200
Circular No. 64	8,000	7,700
Circular No. 65	8,000	6,600
Circular No. 66	8,000	7,650
Circular No. 67	10,000	7,800
Circular No. 68	8,000	7,700
Circular No. 69	10,000	8,200
Circular No. 70	8,000	7,480
Circular No. 71	8,000	7,700
Circular No. 72	9,000	8,100
Circular No. 73	11,000	7,700
Circular No. 74	8,000	7,600
Circular No. 75	9,000	7,200
Circular No. 76	9,000	7,500
Circular No. 77	8,000	7,550
Circular No. 78	18,000	15,900
Circular No. 79	73,000	72,100
Press Review of Circular No. 79, Forest Service	3,000	3,000
Circular No. 80	7,500	7,500
Circular No. 81	50,000	45,800
Press Review of Circular No. 81, Forest Service	3,100	3,100
Circular No. 82	9,000	8,400
Circular No. 83	20,000	16,000
Circular No. 84	7,000	7,000
Circular No. 85	7,000	6,800
Circular No. 86	7,000	6,100
Circular No. 87	7,000	7,000
Circular No. 88	8,000	8,000

Publications other than Farmers' Bulletins received and distributed from July 1, 1906, to June 30, 1907—Continued.

Publications.	Received.	Distributed.
FOREST SERVICE—continued.		
Circular No. 89	7,000	7,000
Circular No. 90	8,000	8,000
Circular No. 91	7,000	7,000
Circular No. 92	8,000	8,000
Circular No. 93	7,000	7,000
Circular No. 94	7,000	6,800
Circular No. 95	7,000	7,000
Circular No. 96	179,000	166,000
Circular No. 97	720,000	710,000
Press Review of Circular No. 97, Forest Service	24,100	24,100
Circular No. 98	27,000	19,300
Circular No. 100	185,000	185,000
Circular No. 106	10,000	1,500
Circular No. 107	58,000	1,000
Press Bulletin No. 135	8,000	8,000
Press Bulletin No. 136	8,000	8,000
Press Bulletin No. 137	8,000	8,000
Press Bulletin No. 138	8,000	8,000
Press Bulletin No. 139	8,000	8,000
Press Bulletin No. 140	8,000	8,000
Press Bulletin No. 141	8,000	8,000
Press Bulletin No. 142	8,000	8,000
Press Bulletin No. 143	13,000	13,000
Press Bulletin No. 144	8,000	8,000
Press Bulletin No. 145	8,000	8,000
Press Bulletin No. 146	8,000	8,000
Press Bulletin No. 147	8,000	8,000
Press Bulletin No. 148	7,000	7,000
Press Bulletin No. 149	8,000	8,000
Press Bulletin No. 150	8,000	8,000
Press Bulletin No. 151	7,000	7,000
The Use Book	50,000	45,000
The Use of the National Forest	1,100	1,100
Press Review of the Use of the National Forests	7,500	7,500
Proclamation of the President to School Children of the United States on Arbor Day	62,000	62,000
Field Program for July, 1906	2,500	2,500
Field Program for August, 1906	2,500	2,500
Field Program for September, 1906	2,500	2,500
Field Program for October, 1906	2,000	2,000
Field Program for November, 1906	2,500	2,500
Field Program for December, 1906	2,500	2,500
Field Program for January, 1907	2,500	2,500
Field Program for February, 1907	2,000	2,000
Field Program for March, 1907	2,500	2,500
Field Program for April, 1907	8,000	8,000
Field Program for May, 1907	2,500	2,500
Field Program for June, 1907	2,500	2,500
Forest Planting Leaflet No. 15	2,000	2,000
Forest Planting Leaflet No. 16	2,000	2,000
Forest Planting Leaflet No. 17	2,000	2,000
Forest Planting Leaflet No. 18	2,000	2,000
Forest Planting Leaflet No. 19	2,000	2,000
Forest Planting Leaflet No. 20	2,000	2,000
Forest Planting Leaflet No. 21	2,000	2,000
Forest Planting Leaflet No. 22	2,000	2,000
Forest Planting Leaflet No. 23	2,000	2,000
Forest Planting Leaflet No. 24	2,000	2,000
Circular, Forest Service, Germination of Pine Seed	2,000	2,000
Forest Atlas	1,000	1,000
Profit in Planted Forests (press review)	1,500	1,500
Preparation of the Forest Atlas	2,000	2,000
Area Table of the National Forest	3,000	3,000
Directions and Specifications for Building Telephone Lines on the National Forests	2,000	2,000
National Forests Order No. 23, part 4	2,000	2,000
Instructions to Forest Officers in Reserve Planting	2,000	2,000
Form 969, Applications for the Classification and Listing of Agricultural Lands in Forest Reserves, June 11, 1906	2,000	2,000
Report on Mining Claims	16,000	16,000
Area Table, Forest Reserves, February 1, 1907	2,000	2,000
Classified List of Publications, July 1, 1906	2,000	2,000
Classified List of Publications, Jan. 1, 1907	2,500	2,500
Classified List of Publications, Feb. 1, 1907	2,000	2,000
Classified List of Publications, Mar. 1, 1907	3,500	3,500
Classified List of Publications, Apr. 1, 1907	7,000	7,000
Classified List of Publications, Apr. 20, 1907	6,800	6,800
Classified List of Publications, May 15, 1907	10,000	10,000

Publications other than Farmers' Bulletins received and distributed from July 1, 1906, to June 30, 1907—Continued.

Publications.	Received.	Distributed.
LIBRARY.		
Report of the Librarian, 1906	300	38
Bulletin No. 60	1,000	713
Bulletin No. 61	1,000	750
Bulletin No. 62	1,000	900
Bulletin No. 63	1,000	925
BUREAU OF PLANT INDUSTRY.		
Report of Chief, 1906	750	750
Bulletin No. 89	1,300	400
Bulletin No. 92	1,000	1,000
Bulletin No. 94	3,000	3,000
Bulletin No. 95	2,000	1,700
Bulletin No. 96	2,000	1,700
Bulletin No. 97	1,000	874
Bulletin No. 98	2,250	2,250
Bulletin No. 99	2,000	2,000
Bulletin No. 100	2,000	1,400
Bulletin No. 100, part 5	1,750	1,750
Bulletin No. 100, part 6	3,500	3,500
Bulletin No. 100, part 7	3,000	2,030
Bulletin No. 100, part 8	2,000	2,000
Bulletin No. 102, part 1	3,000	3,000
Bulletin No. 102, part 2	5,500	5,100
Bulletin No. 102, part 3	6,000	5,750
Bulletin No. 102, part 4	3,000	2,000
Bulletin No. 102, part 5	4,000	2,600
Bulletin No. 102, part 6	1,500	1,250
Bulletin No. 103	2,500	2,500
Bulletin No. 104	2,150	1,760
Bulletin No. 105	2,000	1,000
V. P. P. Bulletin No. 8 (reprint)	500	250
DIVISION OF PUBLICATIONS.		
Report of the Editor, 1906	1,500	1,200
Bulletin No. 3, revised	2,000	1,000
Circular No. 1	2,500	3,000
Circular No. 2	23,000	23,000
Circular No. 3	16,500	16,500
Circular No. 4	5,000	4,900
List 247 (fourteenth edition), List of Publications	2,500	2,500
Monthly List of Publications, July, 1906	200,000	200,000
Foreign Monthly List of Publications, July, 1906	4,000	4,000
Monthly List of Publications, August, 1906	200,000	200,000
Foreign Monthly List of Publications, August, 1906	4,000	4,000
Monthly List of Publications, September, 1906	210,000	210,000
Foreign Monthly List of Publications, September, 1906	4,000	4,000
Monthly List of Publications, October, 1906	210,000	210,000
Foreign Monthly List of Publications, October, 1906	4,000	4,000
Monthly List of Publications, November, 1906	210,000	210,000
Foreign Monthly List of Publications, November, 1906	4,000	4,000
Monthly List of Publications, December, 1906	220,000	220,000
Foreign Monthly List of Publications, December, 1906	4,000	4,000
Monthly List of Publications, January, 1907	220,000	220,000
Foreign Monthly List of Publications, January, 1907	4,000	4,000
Monthly List of Publications, February, 1907	220,000	220,000
Foreign Monthly List of Publications, February, 1907	4,000	4,000
Monthly List of Publications, March, 1907	220,000	220,000
Foreign Monthly List of Publications, March, 1907	4,000	4,000
Monthly List of Publications, April, 1907	220,000	220,000
Foreign Monthly List of Publications, April, 1907	4,000	4,000
Monthly List of Publications, May, 1907	230,000	230,000
Foreign Monthly List of Publications, May, 1907	4,000	4,000
Press Notice No. 541	1,000	1,000
Press Notice No. 542	6,000	6,000
Press Notice No. 544	1,000	1,000
Press Notice No. 545	1,300	1,300
Press Notice No. 547	1,200	1,200
Press Notice No. 548	1,000	1,000
Press Notice No. 550	1,000	1,000
Press Notice No. 553	1,000	1,000
Press Notice No. 554	1,000	1,000
Press Notice No. 556	1,000	1,000
Press Notice No. 557	1,000	1,000
Press Notice No. 558	1,000	1,000
Press Notice No. 560	1,500	1,500
Press Notice No. 561	1,000	1,000
Press Notice No. 563	1,000	1,000
Press Notice No. 564	1,000	1,000
Press Notice No. 566	1,200	1,200

Publications other than Farmers' Bulletins received and distributed from July 1, 1906, to June 30, 1907—Continued.

Publications.	Received.	Distributed.
FOREST SERVICE—continued.		
Circular No. 89	7,000	7,000
Circular No. 90	8,000	8,000
Circular No. 91	7,000	7,000
Circular No. 92	8,000	8,000
Circular No. 93	7,000	7,000
Circular No. 94	7,000	6,800
Circular No. 95	7,000	7,000
Circular No. 96	179,000	166,000
Circular No. 97	720,000	710,000
Press Review of Circular No. 97, Forest Service	24,100	24,100
Circular No. 98	27,000	19,300
Circular No. 100	185,000	185,000
Circular No. 106	10,000	1,500
Circular No. 107	58,000	1,000
Press Bulletin No. 135	8,000	8,000
Press Bulletin No. 136	8,000	8,000
Press Bulletin No. 137	8,000	8,000
Press Bulletin No. 138	8,000	8,000
Press Bulletin No. 139	8,000	8,000
Press Bulletin No. 140	8,000	8,000
Press Bulletin No. 141	8,000	8,000
Press Bulletin No. 142	8,000	8,000
Press Bulletin No. 143	13,000	13,000
Press Bulletin No. 144	8,000	8,000
Press Bulletin No. 145	8,000	8,000
Press Bulletin No. 146	8,000	8,000
Press Bulletin No. 147	8,000	8,000
Press Bulletin No. 148	7,000	7,000
Press Bulletin No. 149	8,000	8,000
Press Bulletin No. 150	8,000	8,000
Press Bulletin No. 151	7,000	7,000
The Use Book	50,000	45,000
The Use of the National Forest	1,100	1,100
Press Review of the Use of the National Forests	7,500	7,500
Proclamation of the President to School Children of the United States on Arbor Day	62,000	62,000
Field Program for July, 1906	2,500	2,500
Field Program for August, 1906	2,500	2,500
Field Program for September, 1906	2,500	2,500
Field Program for October, 1906	2,000	2,000
Field Program for November, 1906	2,500	2,500
Field Program for December, 1906	2,500	2,500
Field Program for January, 1907	2,500	2,500
Field Program for February, 1907	2,000	2,000
Field Program for March, 1907	2,500	2,500
Field Program for April, 1907	8,000	8,000
Field Program for May, 1907	2,500	2,500
Field Program for June, 1907	2,500	2,500
Forest Planting Leaflet No. 15	2,000	2,000
Forest Planting Leaflet No. 16	2,000	2,000
Forest Planting Leaflet No. 17	2,000	2,000
Forest Planting Leaflet No. 18	2,000	2,000
Forest Planting Leaflet No. 19	2,000	2,000
Forest Planting Leaflet No. 20	2,000	2,000
Forest Planting Leaflet No. 21	2,000	2,000
Forest Planting Leaflet No. 22	2,000	2,000
Forest Planting Leaflet No. 23	2,000	2,000
Forest Planting Leaflet No. 24	2,000	2,000
Circular, Forest Service, Germination of Pine Seed	2,000	2,000
Forest Atlas	1,000	1,000
Profit in Planted Forests (press review)	1,500	1,500
Preparation of the Forest Atlas	2,000	2,000
Area Table of the National Forest	3,000	3,000
Directions and Specifications for Building Telephone Lines on the National Forests	2,000	2,000
National Forests Order No. 23, part 4	2,000	2,000
Instructions to Forest Officers in Reserve Planting	2,000	2,000
Form 969, Applications for the Classification and Listing of Agricultural Lands in Forest Reserves, June 11, 1906	2,000	2,000
Report on Mining Claims	16,000	16,000
Area Table, Forest Reserves, February 1, 1907	2,000	2,000
Classified List of Publications, July 1, 1906	2,000	2,000
Classified List of Publications, Jan. 1, 1907	2,500	2,500
Classified List of Publications, Feb. 1, 1907	2,000	2,000
Classified List of Publications, Mar. 1, 1907	3,500	3,500
Classified List of Publications, Apr. 1, 1907	7,000	7,000
Classified List of Publications, Apr. 20, 1907	6,500	6,500
Classified List of Publications, May 15, 1907	10,000	10,000

Publications other than Farmers' Bulletins received and distributed from July 1, 1906, to June 30, 1907—Continued.

Publications.	Received.	Distributed.
LIBRARY.		
Report of the Librarian, 1906	300	38
Bulletin No. 60	1,000	713
Bulletin No. 61	1,000	750
Bulletin No. 62	1,000	900
Bulletin No. 63	1,000	925
BUREAU OF PLANT INDUSTRY.		
Report of Chief, 1906	750	750
Bulletin No. 89	1,300	400
Bulletin No. 92	1,000	1,000
Bulletin No. 94	3,000	3,000
Bulletin No. 95	2,000	1,700
Bulletin No. 96	2,000	1,700
Bulletin No. 97	1,000	874
Bulletin No. 98	2,250	2,250
Bulletin No. 99	2,000	2,000
Bulletin No. 100	2,000	1,400
Bulletin No. 100, part 5	1,750	1,750
Bulletin No. 100, part 6	3,500	3,500
Bulletin No. 100, part 7	3,000	2,030
Bulletin No. 100, part 8	2,000	2,000
Bulletin No. 102, part 1	3,000	3,000
Bulletin No. 102, part 2	5,500	5,100
Bulletin No. 102, part 3	6,000	5,750
Bulletin No. 102, part 4	3,000	2,000
Bulletin No. 102, part 5	4,000	2,600
Bulletin No. 102, part 6	1,500	1,250
Bulletin No. 103	2,500	2,500
Bulletin No. 104	2,150	1,760
Bulletin No. 105	2,000	1,000
V. P. P. Bulletin No. 8 (reprint)	500	250
DIVISION OF PUBLICATIONS.		
Report of the Editor, 1906	1,500	1,200
Bulletin No. 3, revised	2,000	1,000
Circular No. 1	2,500	3,000
Circular No. 2	23,000	23,000
Circular No. 3	16,500	16,500
Circular No. 4	5,000	4,900
List 247 (fourteenth edition), List of Publications	2,500	2,500
Monthly List of Publications, July, 1906	200,000	200,000
Foreign Monthly List of Publications, July, 1906	4,000	4,000
Monthly List of Publications, August, 1906	200,000	200,000
Foreign Monthly List of Publications, August, 1906	4,000	4,000
Monthly List of Publications, September, 1906	210,000	210,000
Foreign Monthly List of Publications, September, 1906	4,000	4,000
Monthly List of Publications, October, 1906	210,000	210,000
Foreign Monthly List of Publications, October, 1906	4,000	4,000
Monthly List of Publications, November, 1906	210,000	210,000
Foreign Monthly List of Publications, November, 1906	4,000	4,000
Monthly List of Publications, December, 1906	220,000	220,000
Foreign Monthly List of Publications, December, 1906	4,000	4,000
Monthly List of Publications, January, 1907	220,000	220,000
Foreign Monthly List of Publications, January, 1907	4,000	4,000
Monthly List of Publications, February, 1907	220,000	220,000
Foreign Monthly List of Publications, February, 1907	4,000	4,000
Monthly List of Publications, March, 1907	220,000	220,000
Foreign Monthly List of Publications, March, 1907	4,000	4,000
Monthly List of Publications, April, 1907	220,000	220,000
Foreign Monthly List of Publications, April, 1907	4,000	4,000
Monthly List of Publications, May, 1907	230,000	230,000
Foreign Monthly List of Publications, May, 1907	4,000	4,000
Press Notice No. 541	1,000	1,000
Press Notice No. 542	6,000	6,000
Press Notice No. 544	1,000	1,000
Press Notice No. 545	1,300	1,300
Press Notice No. 547	1,200	1,200
Press Notice No. 548	1,000	1,000
Press Notice No. 550	1,000	1,000
Press Notice No. 553	1,000	1,000
Press Notice No. 554	1,000	1,000
Press Notice No. 556	1,000	1,000
Press Notice No. 557	1,000	1,000
Press Notice No. 558	1,000	1,000
Press Notice No. 560	1,500	1,500
Press Notice No. 561	1,000	1,000
Press Notice No. 563	1,000	1,000
Press Notice No. 564	1,000	1,000
Press Notice No. 566	1,200	1,200

Publications other than Farmers' Bulletins received and distributed from July 1, 1906, to June 30, 1907—Continued.

Publications.	Received.	Distributed.
OFFICE OF EXPERIMENT STATIONS—continued.		
Experiment Station Record—Continued.		
Vol. 8, No. 2 (reprint)	375	20
Vol. 8, No. 3 (reprint)	425	18
Vol. 8, No. 4 (reprint)	375	9
Vol. 8, No. 5 (reprint)	375	13
Vol. 8, No. 6 (reprint)	400	20
Vol. 8, No. 7 (reprint)	375	5
Vol. 8, No. 8 (reprint)	375	20
Vol. 8, No. 9 (reprint)	375	9
Vol. 8, No. 10 (reprint)	400	5
Vol. 8, No. 11 (reprint)	375	9
Vol. 9, No. 1 (reprint)	500	12
Vol. 9, No. 2 (reprint)	500	11
Vol. 9, No. 3 (reprint)	150	10
Vol. 9, No. 4 (reprint)	250	17
Vol. 9, No. 5 (reprint)	200	3
Vol. 9, No. 6 (reprint)	225	17
Vol. 9, No. 8 (reprint)	50	19
Vol. 9, No. 9 (reprint)	175	9
Vol. 9, No. 10 (reprint)	200	10
Vol. 9, No. 11 (reprint)	275	13
Vol. 9, No. 12 (reprint)	400	10
Vol. 10, No. 1 (reprint)	475	13
Vol. 10, No. 2 (reprint)	450	9
Vol. 10, No. 3 (reprint)	500	8
Vol. 10, No. 4 (reprint)	300	16
Vol. 10, No. 5 (reprint)	500	10
Vol. 10, No. 6 (reprint)	400	55
Vol. 10, No. 8 (reprint)	486	12
Vol. 10, No. 9 (reprint)	500	8
Vol. 10, No. 10 (reprint)	475	10
Vol. 10, No. 11 (reprint)	500	7
Vol. 10, No. 12 (reprint)	25	9
Vol. 11, No. 1 (reprint)	500	13
Vol. 11, No. 2 (reprint)	500	14
Vol. 11, No. 4 (reprint)	75	15
Vol. 11, No. 5 (reprint)	75	19
Vol. 11, No. 6 (reprint)	125	10
Vol. 11, No. 7 (reprint)	100	13
Vol. 11, No. 8 (reprint)	125	9
Vol. 11, No. 9 (reprint)	100	9
Vol. 11, No. 10 (reprint)	100	10
Vol. 11, No. 11 (reprint)	275	9
Vol. 11, No. 12 (reprint)	425	9
Vol. 12, No. 1 (reprint)	100	13
Vol. 12, No. 2 (reprint)	175	75
Vol. 12, No. 3 (reprint)	175	12
Vol. 12, No. 4 (reprint)	225	16
Vol. 12, No. 5 (reprint)	50	12
Vol. 12, No. 6 (reprint)	275	20
Vol. 12, No. 7 (reprint)	225	11
Vol. 12, No. 8 (reprint)	325	11
Vol. 12, No. 9 (reprint)	250	19
Vol. 12, No. 10 (reprint)	200	119
Vol. 12, No. 11 (reprint)	275	11
Vol. 12, No. 12 (reprint)	275	11
Vol. 17, Subject Index	6,500	6,200
Vol. 17, No. 10	6,500	6,000
Vol. 17, No. 11	6,500	6,365
Vol. 17, No. 12	6,500	5,905
Vol. 18, No. 1	6,500	6,200
Vol. 18, No. 2	7,000	6,500
Vol. 18, No. 3	6,500	6,108
Vol. 18, No. 4	6,500	6,100
Vol. 18, No. 5	6,500	6,200
Vol. 18, No. 6	6,500	5,720
Vol. 18, No. 7	6,500	4,700
Vol. 18, No. 8	6,500	5,400
Vol. 18, No. 9	6,500	5,550
OFFICE OF PUBLIC ROADS.		
Report of the Director	500	500
Bulletin No. 27	5,000	4,200
Bulletin No. 28	5,000	3,000
Bulletin No. 29	12,000	5,218
Circular No. 39	1,000	1,168
Circular No. 41	3,000	1,564
Circular No. 43	1,000	1,550
Circular No. 45	5,000	1,238

Publications other than Farmers' Bulletins received and distributed from July 1, 1906, to June 30, 1907—Continued.

Publications.	Received.	Distributed.
OFFICE OF PUBLIC ROADS—continued.		
Circular No. 47	2,000	2,370
Circular No. 48	2,000	2,058
Circular No. 51	10,000	4,000
Circular No. 52	10,000	4,000
Circular No. 53	10,000	4,300
Circular No. 54	10,000	4,250
Circular No. 55	10,000	4,200
Circular No. 56	10,000	4,250
Circular No. 57	10,000	3,000
Circular No. 58	10,000	4,500
Circular No. 59	10,000	4,000
Circular No. 60	10,000	4,500
Circular No. 61	10,000	4,100
Circular No. 62	10,000	4,000
Circular No. 63	10,000	3,500
Circular No. 64	10,000	4,000
Circular No. 65	10,000	7,600
Circular No. 66	10,000	2,500
Circular No. 67	10,000	2,100
Circular No. 68	10,000	2,500
Circular No. 69	10,000	2,400
Circular No. 70	10,000	2,750
Circular No. 71	10,000	2,200
Circular No. 72	10,000	2,400
Circular No. 73	10,000	2,000
Circular No. 74	10,000	2,500
Circular No. 75	10,000	2,460
Circular No. 76	10,000	2,300
Circular No. 77	10,000	2,200
Circular No. 78	10,000	1,100
Circular No. 79	10,000	2,600
Circular No. 80	10,000	3,000
Circular No. 81	10,000	2,000
Circular No. 82	10,000	2,100
Circular No. 83	10,000	2,100
Circular No. 84	10,000	2,200
Circular No. 85	10,000	2,400
Circular No. 86	10,000	2,000
Circular No. 87	10,000	2,400
OFFICE OF THE SECRETARY.		
Report on New Building Operations, 1906	300	300
Doc. 439. Appointments, etc., in the Department of Agriculture	50	50
Report of Expenditures in the Department of Agriculture, 1906	75	75
Preliminary Report of the Secretary of Agriculture, 1906	7,300	5,830
Annual Report of the Department of Agriculture, 1906	1,500	1,500
Yearbook, 1906	1,500	1,500
Report No. 82	8,000	12,690
Report No. 83	86,000	85,210
Report No. 84	5,000	3,000
Circular No. 19	16,000	11,100
Circular No. 20	5,000	3,575
Circular No. 21	80,000	80,000
Circular No. 22	4,000	2,000
Circular No. 23	1,000	700
Extracts from Yearbooks.		
No. 37, part 1 (reprint). Four Common Birds of Farm and Garden	2,000	1,537
No. 66 (reprint). The Blue Jay and Its Food	1,000	1,000
No. 122 (reprint). The Danger of Introducing Noxious Animals and Birds	1,000	500
No. 139 (reprint). Insects Injurious to Beans and Peas	500	500
No. 157 (reprint). Pollination of Pomaceous Fruits	500	400
No. 165 (reprint). Some Examinations of Development of Knowledge in Relation to Animal Diseases	300	300
No. 196 (reprint). Smyrna Fig Culture	500	500
No. 204 (reprint). The Selection of Material for Macadam Roads	2,000	900
No. 213 (reprint). Value of Potatoes as Food	200	480
No. 270 (reprint). Practice of Forest Planting in the United States	1,000	100
No. 274 (reprint). Influence of Forestry upon the Lumber Industry	1,000	200
No. 290 (reprint). Fertilizers for Special Crops	2,000	1,500
No. 293. Cultivation and Fertilization of Peach Orchards	2,000	400
No. 313 (reprint). United States Department of Agriculture and Silk Culture	1,000	200
No. 320 (reprint). Relation of Sugar Beet to General Farming	2,000	300
No. 322. Some New Facts about the Migration of Birds	2,000	500
No. 337. The Handling of Fruit for Transportation	3,500	1,520
No. 368. Meadow Mice in Relation to Agriculture and Horticulture	5,000	2,492
No. 389. The Effect of Inbreeding in Plants	500	500
No. 390. Renovated Butter, etc	3,000	1,100

Publications other than Farmers' Bulletins received and distributed from July 1, 1906, to June 30, 1907—Continued.

Publications.	Received.	Distributed.
OFFICE OF THE SECRETARY—continued.		
Extracts from Yearbooks—Continued.		
No. 391. Ostrich Farming in Arizona	500	500
No. 392. Illustration of the Influence of Experiment Station Work on the Culture of Field Crops	500	237
No. 393. The Relation of Irrigation to Dry Farming	1,500	1,500
No. 394. New Opportunities in Subtropical Fruit Growing	500	500
No. 395. Prolonging the Life of Telephone Poles	13,000	6,800
No. 396. Farm Practice in the Control of Field Crop Insects	500	500
No. 397. Formaldehyde: Its Composition and Uses	2,500	2,243
No. 398. Waste in Logging Southern Yellow Pine	14,000	7,000
No. 399. Promising New Fruits	1,500	1,500
No. 400. Causes Affecting Farm Values	500	500
No. 401. Progress in Drug Plant Cultivation	2,000	300
No. 402. Federal Game Protection, etc	5,500	4,100
No. 403. Game Protection in 1905	5,000	3,500
No. 404. Statistical Matter	10,000	9,500
No. 405. A Directory for Farmers, 1905	10,000	8,800
No. 406. Progress in Forestry in 1905	15,000	8,500
No. 407. Progress in Road Legislation and Road Improvement in the Different States	5,000	4,600
No. 408. The Principal Injurious Insects, 1905	500	500
No. 409. Plant Diseases in 1905	500	500
BUREAU OF STATISTICS.		
Report of the Statistician, 1906	500	354
Bulletin No. 42	4,500	4,250
Bulletin No. 43	49,500	48,500
Bulletin No. 44	49,500	48,500
Bulletin No. 45	4,500	4,500
Bulletin No. 46	4,500	4,350
Bulletin No. 47	4,500	4,500
Bulletin No. 48	5,000	3,200
Bulletin No. 49	5,000	4,650
Bulletin No. 50	5,000	4,500
Crop Reporter:		
Vol. 8, No. 3	105,000	105,000
Vol. 8, No. 4	105,000	105,000
Vol. 8, No. 5	105,000	105,000
Vol. 8, No. 6	105,000	105,000
Vol. 8, No. 7	105,000	105,000
Vol. 8, No. 8	120,000	120,000
Vol. 8, No. 8, supplement	120,000	120,000
Vol. 9, No. 1	120,000	120,000
Vol. 9, No. 2	120,000	120,000
Vol. 9, No. 3	120,000	120,000
Vol. 9, No. 4	120,000	120,000
Vol. 9, No. 5	120,000	120,000
Vol. 9, No. 6	120,000	120,000
BUREAU OF SOILS.		
Report of Chief, 1906	2,500	1,000
Bulletin No. 31	1,000	300
Bulletin No. 32	500	514
Bulletin No. 33	3,500	2,700
Bulletin No. 34	2,500	2,500
Bulletin No. 35	1,000	1,000
Bulletin No. 36	2,500	110
Bulletin No. 37	5,000	3,800
Bulletin No. 38	2,500	1,530
Bulletin No. 39	2,500	1,630
Bulletin No. 41	2,500	2,270
Circular No. 18 (reprint)	2,000	1,541
Report of Field Operations for 1905	1,500	.....
Assignments of Field Parties, September, 1906	500	500
Assignments of Field Parties, December, 1906	500	500
Assignments of Field Parties, January, 1907	700	700
Assignments of Field Parties, March, 1907	500	500
List of Publications of the Bureau of Soils, April, 1907	4,000	4,000
Advance Sheets of Field Operations for 1904:		
Soil Survey of Sacramento Area, California	1,000	473
Soil Survey of Greeley Area, Colorado	1,000	730
Soil Survey of Saline County, Missouri	1,000	735
Soil Survey of Orangeburg Area, South Carolina	1,000	400
Soil Survey of Appomattox County, Virginia	1,000	500
Soil Survey of Bear River Area, Utah	1,000	360
Soil Survey of Stockton Area, California	1,000	671
Soil Survey of Montgomery County, Alabama	1,000	518

Publications other than Farmers' Bulletins received and distributed from July 1, 1906, to June 30, 1907—Continued.

Publications	Received.	Distributed.
BUREAU OF SOILS—continued.		
Advance Sheets of Field Operations for 1905:		
Soil Survey of Grand Junction Area, Colorado	1,000	400
Soil Survey of Leon County, Florida	1,000	400
Soil Survey of Tippecanoe County, Indiana	1,000	855
Soil Survey of Brown County, Kansas	1,000	500
Soil Survey of Madison County, Kentucky	1,000	320
Soil Survey of McCracken County, Kentucky	1,000	353
Soil Survey of Tangipahoa Parish, Louisiana	1,000	540
Soil Survey of Gallatin Valley, Montana	1.000	340
Soil Survey of Crawford County, Missouri	1,000	350
Soil Survey of Scotland County, Missouri	1,000	344
Soil Survey of Carleton Area, Minnesota	1,000	342
Soil Survey of Oxford Area, Michigan	1,000	325
Soil Survey of Sarpy County, Nebraska	1,000	340
Soil Survey of Binghamton Area, New York	1,000	410
Soil Survey of Tompkins County, New York	1,000	500
Soil Survey of Cleveland Area, Ohio	1,000	328
Soil Survey of Perquimans and Pasquotank Counties, North Carolina	1,000	1,000
Soil Survey of Carrington Area, North Dakota	1,000	400
Soil Survey of Newton County, Indiana	1,000	301
Soil Survey of Montgomery County, Pennsylvania	1,000	520
Soil Survey of York County, South Carolina	1,000	764
Soil Survey of Cherokee County, South Carolina	1,000	812
Soil Survey of Henderson County, Tennessee	1,000	800
Soil Survey of Lee County, Texas	1,000	400
Soil Survey of Yorktown Area, Virginia	1,000	562
Soil Survey of Everett Area, Washington	1,000	400
Soil Survey of Upshur County, West Virginia	1,000	321
Soil Survey of Portage County Wisconsin	1,000	347
Soil Survey of Island County, Washington	1,000	347
Soil Survey of Hanover County, Virginia	1,000	320
Soil Survey of Louisa County, Virginia	1,000	450
Advance Sheets of Field Operations for 1906:		
Soil Survey of Lee County, Alabama	1,000	400
Soil Survey of Escambia County, Florida	1,000	340
Soil Survey of Waycross Area, Georgia	1,000	300
Soil Survey of Caddo Parish, Louisiana	1,000	650
Soil Survey of Montgomery County, Mississippi	1,000	314
Soil Survey of Pontotoc County, Mississippi	1,000	522
Soil Survey of New Hanover County, North Carolina	1,000	1,000
Soil Survey of Oklahoma County, Oklahoma	1,000	301
Soil Survey of San Marcos Area, Texas	1,000	374
Soil Survey Field Book—Field Season	1,000	1,000
Report of Chief of Weather Bureau	1,000	1,000
	9,895,371	9,523,738
REPRINTS FROM YEARBOOK.		
No. 329. Relation of Forests to Stream Flow	2,500	100
No. 340. Opportunities in Agriculture	3,000	1,570
No. 348. The Nut Weevils	500	396
No. 350. Practical Road Building in Madison County, Tennessee	2,000	2,000
No. 355. Insects Injurious to Forest Products	1,000	550
No. 359. The Determination of Timber Values	500	500
No. 362. Boys Agricultural Clubs	500	500
No. 373. The Gypsy and Browntail Moths, etc	750	750
No. 374. How Parasites are Transmitted	500	500
No. 375. Some Ways in Which the Department of Agriculture and the Experiment Station Supplement Each Other	500	500
No. 376. How to Grow Young Trees for Forest Planting	13,000	9,700
No. 377. Diversified Farming in the Cotton Belt	2,000	2,000
No. 378. Dark Fire-cured Tobacco of Virginia, etc	2,600	1,200
No. 379. Extension of the River and Flood Service of the Weather Bureau	200	200
No. 380. Table Sirups	1,050	850
No. 381. Insects Enemies of Forest Reproduction	500	500
No. 382. The Use of Illustrated Material in Teaching Agriculture in Rural Schools	5,000	4,420
No. 383. New Fruit Productions of the Department of Agriculture	2,500	1,150
No. 384. The Business of Seed and Plant Introduction and Distribution	500	500
No. 385. Fruit and Its Uses as Food	2,500	2,020
No. 386. The Principal Insect Enemies of the Peach	1,500	1,213

Farmers' Bulletins printed and Congressional and miscellaneous distribution for the fiscal year 1906–7.

No. of bulletin.	Title of bulletin.	Total number received.	Distributed to Congressmen.[a]	Miscellaneous distribution.[a]
22	The Feeding of Farm Animals	61,100	42,635	16,953
24	Hog Cholera and Swine Plague	45,600	24,951	9,363
25	Peanuts: Culture and Uses	20,600	7,138	10,239
27	Flax for Seed and Fiber	.....	2,898	2,768
28	Weeds: And How to Kill Them	45,600	23,127	19,430
29	Souring and Other Changes in Milk	20,200	10,221	9,383
30	Grape Diseases on the Pacific Coast	.....	1,570	2,306
32	Silos and Silage	20,600	10,686	10,389
33	Peach Growing for Market	25,000	11,573	9,163
34	Meats: Composition and Cooking	25,000	14,404	12,537
35	Potato Culture	45,000	22,720	21,251
36	Cotton Seed and Its Products	20,600	9,075	3,975
37	Kafir Corn: Culture and Uses	5,212	2,164	3,388
39	Onion Culture	25,625	9,933	11,014
41	Fowls: Care and Feeding	65,400	41,995	23,405
42	Facts About Milk	40,900	23,550	13,008
43	Sewage Disposal on the Farm	.....	2,918	2,940
44	Commercial Fertilizers	30,000	11,477	12,819
46	Irrigation in Humid Climates	5,100	1,408	3,348
47	Insects Affecting the Cotton Plant	10,000	7,117	2,764
48	The Manuring of Cotton	15,000	9,875	6,970
49	Sheep Feeding	20,000	11,253	9,173
51	Standard Varieties of Chickens	65,000	46,100	14,597
52	The Sugar Beet	20,700	8,864	6,874
54	Some Common Birds	25,200	9,056	13,329
55	The Dairy Herd	41,400	27,604	12,058
56	Experiment Station Work—I	20,500	5,961	5,521
58	The Soy Bean as a Forage Crop	20,200	6,324	7,614
59	Bee Keeping	26,000	11,230	12,712
60	Methods of Curing Tobacco	20,000	11,645	3,918
61	Asparagus Culture	20,000	5,067	11,260
62	Marketing Farm Produce	30,300	17,157	8,469
63	Care of Milk on the Farm	30,250	18,203	7,171
64	Ducks and Geese	40,500	19,743	16,270
65	Experiment Station Work—II	10,600	4,330	5,751
66	Meadows and Pastures	20,500	12,689	7,245
68	The Black Rot of the Cabbage	5,000	4,353	4,362
69	Experiment Station Work—III	10,000	5,278	4,419
70	Insect Enemies of the Grape	5,700	2,828	4,402
71	Essentials in Beef Production	20,000	6,068	5,894
72	Cattle Ranges in the Southwest	.....	1,648	3,197
73	Experiment Station Work—IV	15,000	3,913	6,668
74	Milk as Food	30,250	14,684	10,690
77	The Liming of Soils	20,400	8,001	9,810
78	Experiment Station Work—V	400	3,688	4,283
79	Experiment Station Work—VI	5,000	5,381	4,547
80	The Peach Twig-borer	10,000	7,176	5,435
81	Corn Culture in the South	25,400	20,204	4,717
82	The Culture of Tobacco	20,300	11,572	4,868
83	Tobacco Soils	20,000	12,134	6,309
84	Experiment Station Work—VII	19,450	5,599	6,062
85	Fish as Food	10,000	8,729	8,099
86	Thirty Poisonous Plants	16,093	5,992	10,101
87	Experiment Station Work—VIII	10,000	9,294	4,190
88	Alkali Lands	.....	5,002	3,692
91	Potato Diseases and Their Treatment	40,000	20,896	15,260
92	Experiment Station Work—IX	10,000	5,322	4,394
93	Sugar as Food	20,000	8,030	9,752
95	Good Roads for Farmers	55,000	39,974	13,859
96	Raising Sheep for Mutton	20,000	12,490	10,448
97	Experiment Station Work—X	10,600	3,239	4,687
98	Suggestions to Southern Farmers	30,500	14,831	8,721
99	Insect Enemies of Shade Trees	15,000	3,996	5,518
100	Hog Raising in the South	36,000	25,310	8,292
101	Millets	5,000	5,090	5,728
102	Southern Forage Plants	15,000	8,479	4,133
103	Experiment Station Work—XI	5,000	3,740	4,132
104	Notes on Frost	10,000	2,322	6,654
105	Experiment Station Work—XII	15,000	11,178	4,206
106	Breeds of Dairy Cattle	45,000	26,290	12,298
107	Experiment Station Work—XIII	15,500	5,710	3,966
108	Saltbushes	.....	983	2,292
109	Farmers' Reading Courses	25,000	12,627	10,790
110	Rice Culture in the United States	6,000	2,975	3,190
111	Farmers' Interest in Good Seed	25,500	15,570	6,290
112	Bread and Bread Making	35,250	14,407	14,419
113	The Apple and How to Grow It	56,000	34,741	16,230
114	Experiment Station Work—XIV	15,000	4,942	5,580

[a] Where the number distributed is greater than the number received, the difference is accounted for by the number on hand at the beginning of the year.

Farmers' Bulletins printed and Congressional and miscellaneous distribution for the fiscal year 1906–7—Continued.

No. of bulletin.	Title of bulletin.	Total number received.	Distributed to Congressmen.	Miscellaneous distribution.
115	Hop Culture in California	.....	876	1,893
116	Irrigation in Fruit Growing	15,000	6,877	6,706
118	Grape Growing in the South	10,000	6,117	4,797
119	Experiment Station Work—XV	15,000	1,900	4,153
120	Insects Affecting Tobacco	25,000	11,222	2,860
121	Beans, Peas, and Other Legumes as Food	30,000	13,746	11,669
122	Experiment Station Work—XVI	10,000	7,709	4,964
124	Experiment Station Work—XVII	15,500	3,718	6,047
125	Protection of Food Products from Injurious Temperatures	5,000	6,734	7,067
126	Practical Suggestions for Farm Buildings	50,500	29,873	17,638
127	Important Insecticides	15,000	3,949	6,979
128	Eggs and Their Uses as Food	40,000	18,659	13,566
129	Sweet Potatoes	30,000	14,011	10,766
131	Household Tests for Detection of Oleomargarine and Renovated Butter	15,000	8,413	6,839
132	Insect Enemies of Growing Wheat	20,000	6,947	6,200
133	Experiment Station Work—XVIII	15,000	6,985	4,502
134	Tree Planting in Rural School Grounds	20,300	9,761	12,790
135	Sorghum Sirup Manufacture	10,000	5,378	5,241
136	Earth Roads	30,000	19,203	10,398
137	The Angora Goat	.....	3,265	5,214
138	Irrigation in Field and Garden	20,250	6,955	6,659
139	Emmer: A Grain for the Semiarid Regions	.....	3,886	3,075
140	Pineapple Culture	5,300	1,011	2,788
141	Poultry Raising on the Farm	65,600	45,115	20,485
142	Principles of Nutrition and Nutritive Value of Food	35,000	11,881	16,121
143	The Conformation of Beef and Dairy Cattle	30,000	17,040	5,683
144	Experiment Station Work—XIX	20,800	5,890	4,668
145	Carbon Bisulphid as an Insecticide	10,100	2,768	5,360
146	Insecticides and Fungicides	10,000	6,408	5,100
147	Winter Forage Crops of the South	20,125	11,893	7,297
148	Celery Culture	20,500	10,277	9,044
149	Experiment Station Work—XX	15,000	9,060	4,302
150	Clearing New Land	15,200	6,827	7,074
151	Dairying in the South	20,000	11,221	3,605
152	Scabies in Cattle	15,000	7,476	4,401
153	Orchard Enemies in the Pacific Northwest	5,000	1,695	2,912
154	The Home Fruit Garden: Preparation and Care	40,000	26,627	13,119
155	How Insects Affect Health in Rural Districts	15,000	7,139	8,534
156	The Home Vineyard	40,400	25,306	11,372
157	The Propagation of Plants	15,600	5,700	9,339
158	How to Build Small Irrigation Ditches	20,600	8,160	7,095
159	Scab in Sheep	20,000	6,019	4,316
161	Practical Suggestions for Fruit Growers	45,600	29,284	11,937
162	Experiment Station Work—XXI	10,500	5,415	4,544
164	Rape as a Forage Crop	5,000	3,113	5,056
165	Silkworm Culture	10,000	2,995	3,916
166	Cheese Making on the Farm	15,200	6,913	6,493
167	Cassava	.....	3,157	2,475
168	Pearl Millets	5,000	2,359	2,959
169	Experiment Station Work—XXII	10,500	6,770	3,909
170	Principles of Horse Feeding	60,400	45,319	14,509
171	The Control of the Codling Moth	.....	923	2,022
172	Scale Insects and Mites on Citrus Trees	.....	1,984	2,337
173	Primer of Forestry	45,000	15,989	20,529
174	Broom Corn	5,300	4,669	3,672
175	Home Manufacture and Use of Unfermented Grape Juice	26,000	11,438	10,556
176	Cranberry Culture	.....	1,528	4,024
177	Squab Raising	20,000	9,838	12,493
178	Insects Injurious in Cranberry Culture	.....	1,284	2,091
179	Horseshoeing	35,600	21,591	8,810
181	Pruning	50,100	25,797	15,700
182	Poultry as Food	35,150	23,911	10,685
183	Meat on the Farm—Butchering and Curing	56,000	40,757	13,170
184	Marketing Live Stock	30,750	17,114	8,088
185	Beautifying Home Grounds	50,200	24,368	19,995
186	Experiment Station Work—XXIII	21,200	4,860	6,416
187	Drainage of Farm Lands	40,000	20,715	13,284
188	Weeds Used in Medicine	30,000	7,470	13,559
190	Experiment Station Work—XXIV	10,500	3,911	4,587
192	Barnyard Manure	35,600	18,960	11,906
193	Experiment Station Work—XXV	5,000	6,202	4,645
194	Alfalfa Seed	20,000	9,648	6,995
195	Annual Flowering Plants	30,500	19,353	9,448
196	Usefulness of the American Toad	10,000	4,633	5,185
197	Importation of Game Birds and Eggs for Propagation	5,000	3,147	3,501
198	Strawberries	35,000	21,171	13,885
199	Corn Growing	75,000	61,661	13,339
200	Turkeys	45,000	27,059	18,518

Farmers' Bulletins printed and Congressional and miscellaneous distribution for the fiscal year 1906–7—Continued.

No. of bulletin.	Title of bulletin.	Total number received.	Distributed to Congressmen.	Miscellaneous distribution.
201	Cream Separator on Western Farms	10,000	14,733	9,269
202	Experiment Station Work—XXVI	15,300	4,110	3,726
203	Canned Fruits, Preserves, and Jellies	65,600	42,601	17,311
204	The Cultivation of Mushrooms	20,000	3,066	9,996
205	Pig Management	55,500	48,938	14,580
206	Milk Fever and Its Treatment	25,000	10,183	8,643
208	Varieties of Fruit Recommended for Planting	45,350	33,903	11,364
209	Controlling the Boll Weevil in Cotton Seed and at Gineries	10,400	7,247	4,017
210	Experiment Station Work—XXVII	20,650	5,743	4,212
211	The Use of Paris Green in Controlling the Cotton Boll Weevil	.....	4,715	2,611
213	Raspberries	20,250	9,267	10,675
215	Alfalfa Growing	35,750	21,568	14,679
216	The Control of the Boll Weevil	25,300	14,999	1,956
217	Essential Steps in Securing an Early Crop of Cotton	20,000	19,440	4,951
218	The School Garden	25,350	8,841	14,139
219	Lessons from the Grain Rust Epidemic of 1904	10,000	9,291	6,707
220	Tomatoes	55,600	38,276	16,278
221	Fungous Diseases of the Cranberry	.....	1,060	1,960
222	Experiment Station Work—XXVIII	10,200	5,184	3,554
223	Miscellaneous Cotton Insects in Texas	.....	3,239	1,669
224	Canadian Field Peas	13,100	5,217	5,727
225	Experiment Station Work—XXIX	21,100	9,094	7,314
226	Relation of Coyotes to Stock Raising in the West	.....	1,520	3,490
227	Experiment Station Work—XXX	20,300	15,230	7,456
228	Forest Planting and Farm Management	25,000	13,187	8,552
229	The Production of Good Corn Seed	70,000	51,186	10,976
230	Game Laws for 1905	5,300	4,367	933
231	Spraying for Cucumbers and Melon Diseases	30,000	12,982	10,392
232	Okra: Its Culture and Uses	15,000	8,961	5,396
233	Experiment Station Work—XXXI	20,600	7,904	5,052
234	The Guinea Fowl	15,000	6,921	8,620
235	Preparation of Cement	55,800	30,974	24,245
236	Incubation and Incubators	25,000	17,025	19,022
237	Experiment Station Work—XXXII	36,000	10,882	7,329
238	Citrus Fruit Growing in the Gulf States	.....	5,561	4,117
239	The Corrosion of Fence Wire	25,300	11,177	8,387
240	Inoculation of Legumes	15,000	12,255	12,206
241	Butter Making on the Farm	65,700	48,737	16,916
242	An Example of Model Farming	80,000	47,050	22,950
243	Fungicides and their Use in Preventing Diseases of Fruit	25,930	15,847	10,083
244	Experiment Station Work—XXXIII	25,000	12,944	8,747
245	Renovation of Worn-out Soils	46,000	26,918	15,437
246	Saccharine Sorghums for Forage	10,000	11,073	6,145
247	The Control of the Codling Moth and Apple Scab	30,000	15,379	7,945
248	The Lawn	40,000	28,849	10,049
249	Cereal Breakfast Foods	40,500	19,035	11,768
250	The Prevention of Wheat Smuts and Loose Smuts of Oats	30,000	17,235	10,749
251	Experiment Station Work—XXXIV	30,300	17,663	6,300
252	Maple Sugar and Sirup	5,000	13,246	5,141
253	The Germination of Seed Corn	45,000	33,064	9,232
254	Cucumbers	35,000	21,026	14,803
255	The Home Vegetable Garden	105,800	78,533	25,868
256	Preparation of Vegetables for the Table	145,700	108,471	29,907
257	Soil Fertility	70,400	40,700	22,731
258	Texas or Tick Fever and its Prevention	21,000	8,680	24,742
259	Experiment Station Work—XXXV	25,000	25,164	9,604
260	Seed of Red Clover and Its Impurities	25,400	11,505	12,325
261	The Cattle Tick	30,500	9,318	15,836
262	Experiment Station Work—XXXVI	39,700	17,072	11,802
263	Practical Information for Beginners in Irrigation	35,750	17,398	13,422
264	The Brown-tail Moth and How to Control It	15,400	3,130	9,762
265	Game Laws for 1906	45,850	21,928	18,106
266	Management of Soils to Conserve Moisture	45,000	22,322	13,019
267	Experiment Station Work—XXXVII	30,000	14,091	11,871
268	Industrial Alcohol: Sources and Manufacture	75,550	44,960	27,797
269	Industrial Alcohol: Uses and Statistics	75,650	39,472	24,841
270	Modern Conveniences for the Farm Home	70,200	42,260	25,757
271	Forage Crop Practice in Western Oregon and Western Washington	20,000	6,286	6,334
272	A Successful Hog and Seed Corn Farm	60,000	37,403	15,748
273	Experiment Station Work—XXXVIII	30,000	19,051	9,359
274	Flax Culture	30,000	1,989	4,492
275	The Gipsy Moth and How to Control It	30,400	6,919	5,829
276	Experiment Station Work—XXXIX	30,300	7,351	6,057
277	The Use of Alcohol and Gasoline in Farm Engines	35,000	16,617	10,634
278	Leguminous Crops for Green Manuring	30,000	19,414	6,651
279	A Method of Eradicating Johnson Grass	11,000	1,858	9,104

Farmers' Bulletins printed and Congressional and miscellaneous distribution for the fiscal year 1906–7—Continued.

No. of bulletin.	Title of bulletin.	Total number received.	Distributed to Congressmen.	Miscellaneous distribution.
280	A Profitable Tenant Dairy Farm	30,000	5,735	11,998
281	Experiment Station Work—XL	30,000	2,986	3,369
282	Celery	50,000	26,686	6,833
283	Spraying for Apple Diseases and the Codling Moth in the Ozarks	35,000	12,788	9,627
284	Insect and Fungous Enemies of the Grape East of the Rocky Mountains	30,200	15,334	9,294
285	The Advantage of Planting Heavy Cotton Seed	69,200	8,090	50,995
286	Comparative Value of Whole Cotton Seed and Cotton Seed Meal in Fertilizing Cotton	66,000	10,838	51,630
287	Poultry Management	30,000	14,685	4,806
288	Nonsaccharine Sorghums	30,000	1,972	6,662
289	Beans	30,300	13,272	4,772
290	The Cotton Bollworm	30,700	5,452	5,556
291	Evaporation of Apples	30,000	4,823	8,000
292	Cost of Filling Silos	15,000	262	8,500
293	Use of Fruit as Food	15,000	5,573	6,838
294	Farm Practice in the Columbia Basin Uplands	10,000	140	4,500
295	Potatoes and Other Root Crops as Food	15,000	2,688	3,331
296	Experiment Station Work—XLI	20,400	481	3,000
297	Methods of Destroying Rats	30,000	1,455	14,000
298	The Food Value of Corn and Corn Products	15,000	.....	.....
299	Diversified Farming under the Plantation System	15,000	156	4,800
300	Some Important Grasses and Forage Plants for the Gulf Coast Regions	10,000	.....	3,394
301	Home Grown Tea	20,000	196	3,300
		6,532,485	3,484,713	2,332,712

Publications received and distributed by the Weather Bureau during the year ended June 30, 1907.

Weather Bureau No.	Title of publication.	Number of copies.
	QUARTER ENDED SEPTEMBER 30, 1906.	
	Received.	
355	Cold Waves and Frosts in the United States, Bulletin P	2,000
358	Monthly Weather Review for June, 1906	5,250
359	Monthly Weather Review for July, 1906	5,250
	Washington Daily Weather Maps	135,410
	National Weather Bulletin	31,750
	Distributed.	
197	Lightning and Electricity of the Air, Bulletin 26	35
256	Loss of Life in the United States by Lightning, Bulletin 30	21
292	Climate of California, Bulletin L	4
294	Weather Folklore, Bulletin 33	19
301	Climatic Charts	8
303	Floods of the Mississippi Valley, Spring of 1903, Bulletin M	7
311	Climate, Bulletin 34	7
312	Invariability of Our Winter Climate	4
322	Long Range Weather Forecasts, Bulletin 35	335
326	Periodic Variation of Rainfall in the Arid Region, Bulletin N	21
327	Evaporation Observations in the United States	9
334	Temperature and Relative-Humidity Data, Bulletin O	43
336	Improved Methods of Finding Altitude, etc	7
338	Annual Report of the Chief of the Weather Bureau for 1905	616
339	Daily River Stages, Part VII	4
342	Relations Between Climate and Crops, Bulletin 36	25
344	Studies on Diurnal Periods, etc. (reprint)	120
349	Recent Practice in Erection of Lightning Conductors, Bulletin 37	93
355	Cold Waves and Frosts in the United States, Bulletin P	878
358	Monthly Weather Review for June, 1906	5,250
359	Monthly Weather Review for July, 1906	5,250
	Washington Daily Weather Maps	135,410
	National Weather Bulletin	31,750
	Annual Report of Chief of Bureau, 1900–1901	2
	Annual Report of Chief of Bureau, 1901–2	3
	Annual Report of Chief of Bureau, 1902–3	3
	Annual Report of Chief of Bureau, 1903–4	6
	Annual Report of Chief of Bureau, 1904–5	917
143	Floods of the Mississippi River, Bulletin E	1
232	West Indian Hurricanes, Bulletin H	2

Publications received and distributed by the Weather Bureau during the year ended June 30, 1907—Continued.

Weather Bureau No.	Title of publication.	Number of copies.
	QUARTER ENDED DECEMBER 31, 1906.	
	Received.	
360	Monthly Weather Review for August, 1906	5,150
361	Report on the Climatology of the United States, Bulletin Q	1,000
362	Monthly Weather Review for September, 1906	5,150
363	Monthly Weather Review for October, 1906	5,150
	Washington Daily Weather Maps	133,550
	National Weather Bulletins	8,235
	Snow and Ice Bulletins	5,500
	Distributed.	
197	Lightning and Electricity of the Air, Bulletin 26	15
232	West Indian Hurricanes, Bulletin H	6
256	Loss of Life in the United States by Lightning, Bulletin 30	12
292	Climate of California, Bulletin L	17
294	Weather Folklore, Bulletin 33	20
301	Climatic Charts	11
303	Floods of the Mississippi Valley, Spring of 1903, Bulletin M	16
311	Climate, Its Physical Basis, etc., Bulletin 34	23
312	Invariability of Our Winter Climate	9
322	Long Range Weather Forecasts, Bulletin 35	72
326	Periodic Variation of Rainfall in the Arid Region, Bulletin N	48
327	Evaporation Observations in the United States	20
334	Temperature and Relative Humidity Data, Bulletin O	22
336	Improved Methods of Finding Altitude, etc	35
339	Daily River Stages, Part VII	1
342	Relation Between Climate and Crops, Bulletin 36	15
349	Recent Practice in the Erection of Lightning Conductors, Bulletin 37	68
355	Cold Waves and Frosts in the United States, Bulletin P	49
360	Monthly Weather Reviews for August, 1906	5,150
361	Report on the Climatology of the United States, Bulletin Q	265
362	Monthly Weather Reviews for September, 1906	5,150
363	Monthly Weather Reviews for October, 1906	5,150
	Annual Report of Chief of Bureau, 1900-1901	1
	Annual Report of Chief of Bureau, 1901-2	10
	Annual Report of Chief of Bureau, 1902-3	2
	Annual Report of Chief of Bureau, 1903-4	5
	Annual Report of Chief of Bureau, 1904-5	6
	Washington Daily Weather Maps	133,550
	National Weather Bulletins	8,235
	Snow and Ice Bulletins	5,500
	Cloud Forms	395
	QUARTER ENDED MARCH 31, 1907.	
	Received.	
364	Anemometry, third edition	1,500
365	Monthly Weather Review for November, 1906	5,150
366	Monthly Weather Review for December, 1906	5,150
367	Annual Summary of the Monthly Weather Review for 1906	5,150
368	Monthly Weather Review for January, 1907	5,150
	Washington Daily Weather Maps	143,405
	National Weather Bulletins	8,600
	Snow and Ice Bulletins	17,860
	Distributed.	
197	Lightning and Electricity of the Air, Bulletin 26	86
256	Loss of Life by Lightning, Bulletin 30	74
292	Climatology of California, Bulletin L	71
294	Weather Folklore and Local Weather Signs, Bulletin 33	71
301	Climatic Charts	10
303	Floods of the Mississippi Valley, Spring of 1903, Bulletin M	65
311	Climate, its Physical Basis, etc., Bulletin 34	16
312	Invariability of Our Winter Climate	7
322	Long Range Weather Forecasts, Bulletin 35	128
326	Periodic Variation of Rainfall in the Arid Regions, Bulletin N	42
327	Evaporation Observations in the United States	17
334	Temperature and Relative Humidity Data, Bulletin O	101
336	Improved Methods of Finding Altitude, etc	15
338	Report of the Chief of Bureau, 1905 (pamphlet)	50
342	Relation Between Climate and Crops, Bulletin 36	67
349	Recent Practice in the Erection of Lightning Conductors, Bulletin 37	114
355	Cold Waves and Frosts in the United States, Bulletin P	82
361	Report on the Climatology of the United States, Bulletin Q	532
364	Anemometry, third edition	[a] 1,500

[a] Transferred to Instrument Division.

Publications received and distributed by the Weather Bureau during the year ended June 30, 1907—Continued.

Weather Bureau No.	Title of publication.	Number of copies.
	QUARTER ENDED MARCH 31, 1907—continued.	
	Distributed—Continued.	
365	Monthly Weather Review for November, 1906	5,150
366	Monthly Weather Review for December, 1906	5,150
367	Annual Summary of the Monthly Weather Review for 1906	5,150
368	Monthly Weather Review for January, 1907	5,150
	Weather Bureau Bulletins E, G, and H (2 each)	6
	Daily River Stages, Part V	1
	Daily River Stages, Part VI	2
	Daily River Stages, Part VII	4
	Annual Report of Chief of Bureau, 1891-92	3
	Annual Report of Chief of Bureau, 1893	4
	Annual Report of Chief of Bureau, 1894	54
	Annual Report of Chief of Bureau, 1895-96	3
	Annual Report of Chief of Bureau, 1896-97	4
	Annual Report of Chief of Bureau, 1897-98	2
	Annual Report of Chief of Bureau, 1898-99	2
	Annual Report of Chief of Bureau, 1899-1900	23
	Annual Report of Chief of Bureau, 1900-1901	9
	Annual Report of Chief of Bureau, 1901-2	62
	Annual Report of Chief of Bureau, 1902-3	3
	Annual Report of Chief of Bureau, 1903-4	3
	Annual Report of Chief of Bureau, 1904-5	25
	Washington Daily Weather Maps	143,405
	National Weather Bulletins	8,600
	Snow and Ice Bulletins	17,860
	QUARTER ENDED JUNE 30, 1907.	
	Received.	
369	Monthly Weather Review for February, 1907	5,100
370	Monthly Weather Review for March, 1907	5,100
371	Monthly Weather Review for April, 1907	5,100
	Washington Daily Weather Maps	138,680
	National Weather Bulletin	31,825
	Distributed.	
197	Lightning and Electricity of the Air, Bulletin 26	30
256	Loss of Life by Lightning, Bulletin 30	15
292	Climatology of California, Bulletin L	14
294	Weather Folklore and Local Weather Signs, Bulletin 33	12
301	Climatic Charts	7
303	Floods of the Mississippi Valley, Spring of 1903, Bulletin M	10
311	Climate and its Physical Basis, etc., Bulletin 34	14
312	Invariability of Our Winter Climate	6
322	Long Range Weather Forecasts, Bulletin 35	30
326	Periodic Variation of Rainfall, Arid Regions, Bulletin N	94
327	Evaporation Observations in the United States	11
334	Temperature and Relative Humidity Data, Bulletin O	26
336	Improved Methods for Finding Altitude, etc	8
338	Report of the Chief of Bureau, 1905 (pamphlet)	24
342	Relations Between Climate and Crops, Bulletin 36	17
349	Recent Practice in the Erection of Lightning Conductors, Bulletin 37	105
355	Cold Waves and Frosts in the United States, Bulletin P	26
361	Climatology of the United States, Bulletin Q	27
369	Monthly Weather Review for February, 1907	5,100
370	Monthly Weather Review for March, 1907	5,100
371	Monthly Weather Review for April, 1907	5,100
	Weather Bulletins E, G, and H (4, 2, and 1 copies issued, respectively)	7
	Daily River Stages, Part V, Part VI, and Part VII (1, 2, and 9 copies issued, respectively)	12
	Annual Report of Chief of Bureau, 1891-92	1
	Annual Report of Chief of Bureau, 1893	1
	Annual Report of Chief of Bureau, 1894	2
	Annual Report of Chief of Bureau, 1895-96	4
	Annual Report of Chief of Bureau, 1896-97	6
	Annual Report of Chief of Bureau, 1897-98	5
	Annual Report of Chief of Bureau, 1898-99	3
	Annual Report of Chief of Bureau, 1899-1900	2
	Annual Report of Chief of Bureau, 1900-1901	2
	Annual Report of Chief of Bureau, 1901-2	12
	Annual Report of Chief of Bureau, 1902-3	5
	Annual Report of Chief of Bureau, 1903-4	7
	Annual Report of Chief of Bureau, 1904-5	8
	Washington Daily Weather Maps	138,690
	National Weather Bulletin	31,825

REPORT OF THE ACTING CHIEF OF THE BUREAU OF STATISTICS.

U. S. DEPARTMENT OF AGRICULTURE,
BUREAU OF STATISTICS,
Washington, D. C., September 30, 1907.

SIR: I have the honor to submit herewith a report of the Bureau of Statistics for the fiscal year ended June 30, 1907.

Respectfully,

C. C. CLARK,
Acting Chief of Bureau.

Hon. JAMES WILSON, *Secretary.*

ORGANIZATION.

The organization of the Bureau of Statistics of the Department of Agriculture includes a Statistician and Chief of Bureau, an Associate Statistician, an Assistant Statistician, and a Chief Clerk. There are three divisions, the Division of Domestic Crop Reports, the Division of Foreign Markets, and the Editorial Division and Library, each of which has a chief of division reporting directly to the Statistician.

In April of this year leave of absence was granted Mr. Victor H. Olmsted, Statistician and Chief of Bureau, to enable him to superintend the taking of the census of Cuba, and during his absence Mr. C. C. Clark, the Associate Statistician, has been Acting Chief of Bureau and chairman of the Crop Reporting Board.

GROWTH AND DEVELOPMENT OF CROP STATISTICS.

The first provision for the collection of agricultural statistics by the Department of Agriculture was made by Congress in 1863. At that time and a few years later the United States was entering upon a period of rapid development of agricultural and commercial resources on a large scale, and there was felt to be an essential need by different branches of business for the collection and dissemination of additional information. The amount of capital then invested in lands and farming implements was about seven billions of dollars; now it is nearly twenty-eight billions.

Foreign countries depend to a large and increasing extent upon the United States for agricultural products. To meet the market demands at home and abroad is the mission of American agriculture. The manufacturer, the merchant, the mechanic, the skilled operative in the factory, in fact, all who consume the products of American agriculture, whether at home or abroad, feel interested in the monthly reports of conditions on the farms of the United States.

Statistical information concerning crop production and live stock that is collected by the slow and exact methods of a census is generally not given to the public until after the crops enumerated are harvested and marketed and the immediate interest in it has passed away. Prices of agricultural products are primarily governed by the law of supply and demand; therefore early information concerning the supply is of value to all. Those who produce and those who consume are vitally interested as well as the dealer who stands between them. The relations and mutual interests of agriculture, manufacture, and commerce demand that there should be published at brief intervals during the crop season reliable information on the condition, acreage, production, and value of the principal crops, by States and agricultural areas.

As commerce consists largely in an exchange of the products of agriculture and manufacture among their respective producers, commerce thrives as the farmer and the factory operative prosper. Some individuals, however, do not always regard the common welfare, and injurious commercial speculations occur when ignorance prevails concerning the condition of our crops and the true relations of supply and demand. At such times the farmer often does not obtain just prices, while the consumer derives no benefit and business is injuriously affected. The consequences of false reports concerning the condition and prospective yield of the cotton crop alone may be very injurious. If there were no adequate Government crop-reporting service, and by misleading reports speculators should depress the price a single cent per pound, the growers would lose $60,000,000 or more; if the prices were improperly increased, the manufacturers and allied interests would be affected to a proportionate degree. All interests therefore demand that the true condition of crops should be made known promptly, and harmful speculation discouraged.

It was to remedy these evils and to subserve and protect the interests above noted that Congress provided for issuing monthly crop reports. From an allotment of a few thousand dollars each year at first, the crop reporting service has been evolved, perfected, and enlarged into the Bureau of Statistics of this Department, and the total cost of such service from its institution down to date has been about three and a half million dollars. Thus for forty-five years the total cost of this service has been less than one-third of the amount required to take the last census of the United States; yet the consequent protection to the farmers alone has been of incalculable value.

The first enactment authorizing the collection of agricultural statistics by the Department of Agriculture was the act establishing the Department, passed May 15, 1862, "the general design and duties of which shall be to acquire and to diffuse among the people of the United States information on subjects connected with agriculture, in the most general and comprehensive sense of that word." The Commissioner was required by this act to "procure and preserve all information concerning agriculture which he can obtain by means of books, correspondence, and by practical and scientific experiments, accurate records of which experiments shall be kept in *his office*, by the collection of statistics, and by any other appropriate means within his power."

The first appropriation for collecting agricultural statistics in the Department was provided for by the act of February 25, 1863, which was made in bulk for the work of the Department, amounting in all to $90,000. The then Commissioner of Agriculture allotted a part of this amount for collecting agricultural statistics, and appointed a statistician for that purpose. For the fiscal year ending June 30, 1865, the first distinct and separate provision was made for collecting agricultural statistics for information and reports, and the amount of $20,000 was appropriated. In the act covering the year 1869, appropriation for a statistician was made on the statutory roll of the Department of Agriculture, and similar appropriations were made for a number of years in amounts ranging from $12,000 to $17,000 a year. For the fiscal year ending June 30, 1881, the appropriations for the Department of Agriculture were provided for by special act, all appropriations for prior years having been included in the legislative, executive, and judicial act. In this year a statistical division was appropriated for, with a statistician and six clerks, with salaries aggregating $10,800, and, in addition, " for collecting statistics and compiling and writing matter for monthly, annual, and special reports, $10,000," making a total for that year of $20,800. A similar appropriation was made for the following year.

By the act covering the fiscal year 1883 the first enlarged appropriation was made for the beginning of a complete and comprehensive statistical organization in the Department. The act provided for a Division of Agricultural Statistics, with a total appropriation of $93,700. This amount was increased to $109,000 in the following year, and to $134,000 in 1885, but the appropriations were in somewhat smaller amounts for the next five years. In 1891 the amount appropriated for the Division of Statistics was $136,000, and remained at that figure for five years. In each of the six years following 1896 the amount was about $145,000, the increase being made to permit the expenditure of about $10,000 to continue investigations concerning the feasibility of extending foreign markets for the agricultural products of the United States. The act for the fiscal year 1904 enlarged the organization and provided for the Bureau of Statistics, with an appropriation of about $160,000, which was increased to $197,000 for each of the two following years. The appropriation act for the Department of Agriculture for the fiscal year ended June 30, 1907, carried an appropriation of $210,560 for the Bureau of Statistics, and during the current year such appropriation has been increased to about $220,000. As the appropriations for the statistical and crop-reporting service have been gradually increased during the past several years, the field service and organization of the Bureau have been correspondingly enlarged and perfected.

METHODS OF CROP REPORTING.

The general plan and principal methods of the crop-reporting service have not undergone material changes during the past year. Efforts have been successfully devoted to perfecting and improving many details of the organization.

The Bureau of Statistics issues each month detailed reports relating to agricultural conditions throughout the United States, the data upon which these facts are based being obtained through a

special field service, a corps of State statistical agents, and through a large body of voluntary correspondents composed of the following classes: County correspondents, township correspondents, individual farmers, and special cotton correspondents.

The special field service is composed of seventeen traveling agents, each assigned to report for a given group of States. They are especially qualified by statistical training and practical knowledge of crops. They systematically travel over the districts assigned to them, carefully note the development of each crop, keep in touch with best informed opinion, and render written and telegraphic reports monthly and at such other times as required.

There are forty-five State statistical agents, each located in a different State. Each of these reports for his State as a whole, and maintains a corps of correspondents entirely independent of those reporting directly to the Department at Washington. These State statistical correspondents report each month directly to the State agent on schedules furnished him. These reports are then tabulated and weighted according to the relative product or area of the given crop in each county represented, and are summarized by the State agent, who coordinates and analyzes them in the light of his knowledge of conditions derived from personal observation and other sources, and prepares his monthly and other written and telegraphic reports to the Department.

There are approximately 2,800 counties of agricultural importance in the United States. In each of these counties the Department has a principal county correspondent who maintains an organization of several assistants. These county correspondents are selected with special reference to their qualifications and constitute an efficient branch of the crop-reporting service. They make the county the geographical unit of their reports, and after obtaining data each month from their assistants and supplementing these with information obtained from their own observation and knowledge, report directly to the Department at Washington.

In the townships and voting precincts of the United States in which farming operations are extensively carried on the Department has township correspondents who make the township or precinct the geographical basis of reports, which they also send directly to the Bureau of Statistics each month.

Finally, at the end of the growing season a large number of individual farmers and planters report on the results of their own individual farming operations during the year; and valuable data are also secured from 30,000 mills and elevators.

With regard to cotton, all the information secured from the foregoing sources is supplemented by that furnished by special cotton correspondents, embracing a large number of persons intimately concerned in the cotton industry, and, in addition, inquiries in relation to acreage and yield per acre of cotton are addressed to the list of cotton ginners through the courtesy of the Bureau of the Census.

SCOPE OF CROP REPORTS.

Eleven monthly reports on the principal crops are received yearly from each of the special field agents, county correspondents, State *statistical* agents, and township correspondents, and one report relat-

ing to the acreage and production of general crops is received during the year from individual farmers.

Six special cotton reports are received during the growing season from the special field agents, from the county correspondents, from the State statistical agents, and from township correspondents, and the first and last of these reports are supplemented by returns from individual farmers, special correspondents, and cotton ginners.

The general reports for January and February are combined on one schedule and relate to the number and value of farm animals.

The general report for March relates to the stock of grain in farmers' hands, the distribution and consumption of corn, wheat, and oats, and the average weight per bushel of wheat and oats.

Reports on the condition of the crops of the year begin with the April report, when the condition of winter wheat and rye is dealt with, prevailing diseases of farm animals, and losses from disease and exposure.

The report for May comes at a time when few of the crops are sufficiently advanced for their condition to be reported upon; consequently the inquiries relative to condition apply only to winter wheat, rye, meadow mowing lands, and spring pasture. This schedule also deals with the portion, if any, of the original acreage sown to winter wheat that for any reason has been or will be abandoned, and contains inquiries with regard to farm labor and tenants.

The schedule for June deals with the acreage of six crops, the most important of which is spring wheat. It also covers the condition of wheat, oats, barley, rye, clover, spring pastures, apples, peaches, and rice.

The July schedule deals with the acreage of corn, potatoes, tobacco, and sugar cane; the stocks of wheat in farmers' hands; the average condition of all the principal crops, fruits, and spring pastures, and the average weight of wool per fleece.

The August schedule deals with the average yield of winter wheat per acre, acreage of buckwheat and hay, the condition of the principal crops, the quality of clover hay, and the stocks of oats in farmers' hands.

The September schedule deals with the condition, when harvested, of wheat, oats, barley, and rye; the acreage of clover seed; the production of peaches, and the number and condition of stock hogs on hand for fattening.

The October schedule deals with the average yield per acre and the quality of spring wheat, barley, oats, rye, and hops, and the condition of corn, potatoes, sugar cane, tobacco, rice, and apples.

The November schedule deals with the average yield per acre of corn, buckwheat, potatoes, hay, tobacco, and rice.

The December schedule deals with the production and farm prices of all the principal crops, and the acreage of winter wheat and rye sown for the crop of the following year, and also with the condition of winter wheat and rye.

In addition to the foregoing the reports during the past two years have been extended to include condition figures of many small fruits, vegetables, and minor products. Information in regard to such products has been urgently requested, and as a basis for comparison has now been satisfactorily established the reports are received with interest and favorable comment.

TRANSMISSION OF REPORTS TO BUREAU BY CORRESPONDENTS.

Previous to the preparation and issuance of the Bureau's reports each month, the correspondents of the several classes send their reports separately and independently to the Department at Washington.

In order to prevent any possible access to reports which relate to speculative crops, and to render it absolutely impossible for premature information to be derived from them, all of the reports from the State statistical agents, as well as those of the special field agents, are sent to the Secretary of Agriculture in specially prepared envelopes addressed in red ink with the letter "A" plainly marked on the ends. By an arrangement with the postal authorities these envelopes are delivered to the Secretary of Agriculture in sealed mail pouches. These pouches are opened only by the Secretary or Assistant Secretary, and the reports, with seals unbroken, are immediately placed in the safe in the Secretary's office, where they remain sealed until the morning of the day on which the reports are issued, when they are delivered to the Statistician by the Secretary or the Assistant Secretary. The combination for opening the safe in which such documents are kept is known only to the Secretary and the Assistant Secretary of Agriculture. Reports from special field agents and State statistical agents residing at points more than 500 miles from Washington are sent by telegraph, in cipher. Those in regard to speculative crops are addressed to the Secretary of Agriculture.

Reports from the State statistical agents and special field service in relation to nonspeculative crops are sent in similar envelopes marked "B," which go to the Bureau of Statistics, and are kept securely in a safe until the data contained in them are required by the Statistician in computing estimates regarding the crops to which they relate. The reports from the county correspondents, township correspondents, and other voluntary agents are sent to the Chief of the Bureau of Statistics by mail in sealed envelopes.

PREPARATION OF REPORTS.

The plan of intrusting the final preparation of reports to a crop-reporting board has been continued during the past year, and after two full years of trial it has been demonstrated that such is an excellent and satisfactory method. It relieves one man of the strain and responsibility, and secures the benefits of consultation and a consensus of judgment of men who have been on the ground.

The Crop Reporting Board is composed of the Chief of Bureau as chairman, and four other members, whose services are brought into requisition each crop-reporting day from among the statisticians and officials of the Bureau, and the special field and State statistical agents who are called to Washington for the purpose.

The personnel of the board is changed each month. The meetings are held in the office of the Statistician, which is kept locked during sessions, no one being allowed to enter or leave the room or the Bureau, and all telephones being disconnected.

When the board has assembled reports and telegrams regarding speculative crops from State and field agents, which have been placed unopened in a safe in the office of the Secretary of Agricul-

ture, are delivered by the Secretary, opened, and tabulated; and the reports, by States, from the several classes of correspondents and agents relating to all crops dealt with are brought together in convenient parallel columns on final tabulation slips; the board is thus provided with several separate estimates covering each State and each separate crop, made independently by the respective classes of correspondents and agents of the Bureau, each reporting for a territory or geographical unit with which he is thoroughly familiar.

Abstracts of the weather condition reports in relation to the different crops, by States, are also prepared from the weekly bulletins of the Weather Bureau. With all these data before the board, each individual member computes independently, on a separate sheet or final computation slip, his own estimate of the acreage, condition, or yield of each crop, or of the number, condition, etc., of farm animals for each State separately. These results are then compared and discussed by the board under the supervision of the chairman, and the final figures for each State are decided upon. It has been interesting to note how often the reports of the different classes of correspondents and agents are very nearly identical and how closely the figures arrived at independently by the individual members of the board agree. The estimates by States as finally determined by the board are weighted by the acreage figures for the respective States, the result for the United States being a true weighted average for each subject.

There have been 18 meetings of the Crop Reporting Board during the past year, in most of which the personnel has been changed each month. Six special field agents, specialists in their respective lines of statistical and crop knowledge, and eight State statistical agents have served in the different board meetings. Many of these men are widely known throughout the United States, and the practice of having them take part in the preparation of the monthly crop reports and estimates has proved highly satisfactory, and has been a great factor in establishing the confidence of the public generally throughout the country in the fairness and correctness of the Bureau's estimates.

METHOD OF ISSUING REPORTS.

Reports in relation to cotton, after being prepared by the Crop Reporting Board, and personally approved by the Secretary of Agriculture, are issued on the second or third day of each month during the growing season, and reports relating to the principal farm crops and live stock are prepared and made public on the ninth or tenth day of each month. In order that the information contained in these reports may be made available simultaneously throughout the entire United States, they are handed, at an announced hour on report days, to all applicants and to the Western Union Telegraph Company and the Postal Telegraph Cable Company, who have branch offices in the Department of Agriculture, for transmission to the exchanges and to the press. These companies have reserved their lines at the designated time, and forward immediately the figures of most interest. A mimeograph or multigraph statement, also containing such estimates of condition or actual production, together with the corresponding estimates of former years for comparative

purposes, is prepared and sent immediately to exchanges, newspaper publications, and individuals. The same afternoon printed cards containing the essential facts concerning the most important crops of the report are mailed to the 77,000 post-offices throughout the United States for public display, thus placing most valuable information within the farmer's immediate reach.

Promptly after the issuing of the report, it, together with other statistical information of value to the farmer and the country at large, is published in the Crop Reporter, an eight-page publication of the Bureau of Statistics, under the authority of the Secretary of Agriculture. An edition of over 120,000 copies is distributed to the correspondents and other interested parties throughout the United States each month.

WORK OF THE YEAR.

APPROPRIATION AND ALLOTMENTS.

The appropriation for the Bureau of Statistics for the past fiscal year totaled $210,560, of which amount $97,660 was specifically appropriated for the payment of salaries through a statutory roll, and $4,900 was appropriated for investigations concerning the feasibility of extending the demands of foreign markets for the agricultural products of the United States. The remaining $108,000 was appropriated to defray the general expenses incident to collecting agricultural statistics, and was allotted and disbursed as follows: Salaries of experts, scientists, and labor in Washington, $7,500; salaries of State statistical agents, $25,500; traveling expenses of State statistical agents, $4,500; salaries and traveling expenses of special field agents, $55,600; traveling expenses of special investigators, $1,850; stationery, envelopes, supplies, etc., $10,550; telegraph, telephone, express, etc., $500.

STATE STATISTICAL AGENTS.

Particular efforts have been made during the year to improve and perfect this important class of correspondents, and special care has been exercised in the selection and appointment of new agents where vacancies have occurred from deaths and resignations. Only men possessing proper qualifications and fitness have been selected, and then only after careful investigation by representatives of the Department. Many of the State agents have been visited and their offices inspected by officials of the Bureau during the year, and it is gratifying to note that their methods of securing data and compiling their reports have been brought to a scientific and uniform basis. Sectional file cases have been purchased and sent to the principal State agents for use in filing schedules, tabulation sheets, correspondence, and records used in connection with their official position. Minute instructions have been given as to their use, and strict directions have also been given to the effect that they should be carefully locked, and that no one should have access to them except the agent, his secretary or assistant, and officials representing the Bureau. These cases have been found to be a very great convenience to the agents, and to have rendered their records and reports more secure. It has also enabled

the representatives of the Bureau to make a quicker and more satisfactory inspection of the offices from time to time.

The appropriations of this Bureau were somewhat increased last year, and one of the principal reasons was to enable the State statistical agents to travel within and throughout their respective States for the purpose of making personal investigations of crop conditions, and of meeting their correspondents or aids, and enlisting the services of new ones. About $5,000 was allotted for this purpose during the year, and the State agents were directed to travel in the spring, at the time inquiries are made as to the acreage of the principal crops, and also in the fall or near the time of harvest, when inquiries are made as to the yield and production. Excellent reports have been received from the different agents as to the great assistance and advantage of this travel, and it is felt that such benefits have been reflected in improved and more accurate reports from such agents.

SPECIAL FIELD AGENTS.

By means of a slight increase in the appropriations of this Bureau the corps of field and traveling agents was increased by the appointment of two additional men, and the territories of several of the agents have been redistributed and reassigned, so that the entire country is now better covered and represented by this class of reporters. The number of agents has been increased to seventeen; the principal cotton-producing States are now covered by six agents, while eight others are assigned to the remaining territory of the United States, including the principal wheat and corn producing States, and three others are principally engaged in collecting statistics throughout the United States in regard to such crops as tobacco and rice.

EARLIER PUBLICATION OF REPORTS.

Successful efforts have been made to secure the earlier publication of the monthly crop reports, so that the information contained therein is disseminated earlier, and nearer the dates to which the reports relate. The reports as to cotton relate to the 25th of the month, and have formerly been published on the 3d of the following month; this year their publication on the 2d has been secured, and it is believed that the date of publication may even be advanced to the 1st, and efforts to that end are now being made. The reports as to grain and other products relate to the 1st of each month, and have been formerly published on the 10th of the month. This year their publication has been made on the 9th—or 8th in some months—and it is desired to secure their publication not later than the 7th or 8th of every month.

The earlier publication of the reports has been secured by simplifying methods of tabulation and improving the organization of the Bureau.

IMPROVED METHODS OF TABULATION.

A simplified method of "weighting" the county averages of the principal crops, adopted during the past year, has greatly lessened the labor and time required in tabulating and preparing the monthly

crop reports without lessening in the least degree their accuracy. In tabulating the schedules received from correspondents each month the reports from each county are "weighted"; that is, the condition or figure reported for each county is multiplied by a figure representing the relative importance of the county in the production of the crop reported upon. In the past it has been the practice to "weight" each county by an exact figure of two or more digits representing the acreage or production, as 33, 83, 195, etc.; now, however, an approximate multiple is used, as, in the above numbers, 35, 80, 200, etc. By this simplified method multiplications and other computations are made more rapidly and promptly, and there is practically no change in the final results, as has been demonstrated in many test cases.

The verification and duplicating work in the Statistician's office has been perfected by the installation of computing and adding machines, with electrical attachments, and the use of multigraphs.

REVISION OF REPORTS.

The method of obtaining the acreages of crops by applying an estimate of the percentage of increase or decrease as compared with the preceding year's acreage may give rise to what is known as a "cumulative error." Should there be a tendency to underestimate or overestimate under this percentage system it may result at the end of a term of years in a deviation from the true situation, while the yearly comparisons with the preceding year may be close enough to the actual facts to entitle the reports to credit and value as a useful guide. Such errors can be corrected every ten years by comparison with the decennial census, or, more frequently, by State censuses and by statistics of commercial movements. When the last decennial census (1900) was published, its figures were not accepted in their entirety by the then Statistician of this Bureau in readjusting his figures where differences existed; and an exhaustive investigation made during the past year has shown that certain readjustments of acreage figures were necessary. By stating the amount of correction, this Bureau has thus revised its figures where found necessary without misleading the public into making wrong comparisons. It is believed that recent acreage estimates of this Bureau are nearer to actual conditions than former estimates have been, and that the figures are now on a proper basis for securing relatively correct estimates.

INTERNATIONAL TRADE AND PRODUCTION STATISTICS.

Renewed efforts were made during the year to enlarge the statistical information of the Yearbook concerning international trade in agricultural products and concerning the agricultural production of all of the countries of the world for which information is obtainable. International trade tables are now compiled and published for corn, wheat, wheat flour, and for wheat and wheat flour combined in terms of bushels of wheat; for cotton, unmanufactured tobacco, hops, rice, sugar, tea, coffee, oil cake, and oil-cake meal; for rosin, spirits of turpentine, india rubber, wood pulp, wool, hides and skins, butter, cheese, live-meat animals, and packing-house products. There are

22 commodities for which tables of the international trade of most of the countries of the world are prepared.

The statement of the agricultural production of all countries ascertainable has been enlarged by the inclusion of several products heretofore omitted, and the full list of these now embraces 15 products: Corn, wheat, oats, barley, rye, potatoes, cotton, tobacco, hops, flaxseed, rice, sugar, cocoa, silk, and wool.

The compilation of the number of live stock for all countries for which the facts are known or estimated has been improved, and expresses the best information concerning the number of cattle, dairy cows, horses, mules, swine, asses, sheep, domesticated buffaloes, camels, goats, and reindeer.

COTTON AND SUGAR.

A table was compiled showing the production, value, consumption, domestic exports, and net imports of cotton for the United States annually from 1790 to 1906. A table was also compiled showing the annual production of sugar in the United States and its possessions beginning with 1854–5, the earliest year for which a statement can be made. Separate statements are made of beet-sugar production, and of cane-sugar production in Louisiana, other Southern States, Porto Rico, Hawaii, and the Philippine Islands.

HOPS.

In consequence of the interest in hops manifested by growers and traders, a bulletin was prepared embracing comprehensive information with regard to this product, including the production in the United States and in other principal countries, the exports of the United States and the international trade, prices in principal markets in the United States and in Europe, and the consumption in principal foreign countries. On account of close relationship to the hop industry, supplementary information concerning the quantity of beer brewed in the principal countries of the world was compiled and published.

MEAT SUPPLY AND SURPLUS.

A comprehensive bulletin in relation to the meat supply and surplus of the United States has been prepared. It includes a detailed statement of the meat production of this country and of the per capita consumption. Among the topics treated are the importance of the meat industry as indicated by the capital directly concerned; the disposal of the national surplus of meat among importing countries during a long period of years; the stock of meat animals at census dates beginning with 1840; and the declining per capita consumption of meat.

In the investigation of the meat supply, attention was given to meat consumption by workingmen's families as determined by the Bureau of Labor, to the prices of meat, and the consumer's cost of the meat consumed annually. Much information was secured concerning the quantity of meat consumed in foreign countries, the statement for Germany being specially full, as a result of the meat-inspection law of 1904.

This investigation made it possible to state the number of hides and skins produced in this country in 1900 and also the number of beef hides consumed in that year.

An article was prepared for the Yearbook of 1906 concerning the restrictions against the importation of meat from the United States into principal European countries, the information being mostly derived from official publications of those countries. This article is a summary of the prohibitions of principal European countries affecting pork, cattle, and beef; of the restrictive measures which make the exportation of meat and meat products from the United States to these countries difficult, if not impossible; and of the technical procedures in exporting to those countries.

CEREALS IN EUROPE.

Several investigations of the subject of wheat and other cereal products in principal European countries and the trade in these products were brought to a close, and the varied information so collected is contained in three bulletins. These bulletins and a former one concerning Russia's wheat surplus cover the European situation with regard to wheat and other cereals in a way which is novel and instructive.

OCEAN FREIGHT RATES.

The conditions now affecting ocean freight rates for the transportation of agricultural products as prevailing at principal Atlantic and Gulf ports demanded especial attention during the year on account of changes in recent years. Inquiries at ports elicited much information concerning the business methods of the trans-Atlantic trade, concerning the operations of transferring cargoes, concerning the rates for transportation, and other features of the business of exporting and ocean transportation. This information has been published in bulletin form.

PUBLICATIONS.

The statistics giving information as to crop conditions, and the acreage, production, and value of the principal agricultural products, and the number and value of farm animals are published and disseminated through the medium of the Crop Reporter, an 8-page monthly publication of this Bureau. During the past year there were printed and distributed 1,485,000 copies of this publication.

In addition to the regular crop-reporting duties, a considerable amount of work is done in the preparation of bulletins and of articles for publication in the Yearbook. Investigations are also made to obtain information necessary to answer inquiries of newspaper men and other correspondents, and to secure data for the use of Senators, Representatives, and Department officials. Twenty bulletins were prepared by this Bureau during the year, eight of which contain compilations of the acreage, production, average yield per acre, and the farm prices on December 1 of principal crops throughout a long series of years. One bulletin, concerning the cost of producing farm products, is the report of an investigation made in cooperation with

the Division of Agriculture of the Minnesota Agricultural Experiment Station. The bulletin relating to the costs of hauling crops from farms to shipping points and nine other bulletins of the year were prepared by the Division of Foreign Markets. The titles of the twenty bulletins follow:

No. 48.—The Cost of Producing Farm Products. Methods of Investigation. Cost of Growing Minnesota Field Crops, 1902, 1903, 1904.
No. 49.—Costs of Hauling Crops from Farms to Shipping Points.
No. 50.—Hops in Principal Countries: Their Supply, Foreign Trade, and Consumption, with Statistics of Beer Brewing.
No. 52.—Imports of Farm and Forest Products, 1904–1906.
No. 53.—Exports of Farm and Forest Products, 1904–1906.
No. 54.—Trade with Noncontiguous Possessions in Farm and Forest Products, 1904–1906.
No. 55.—Meat Supply and Surplus, with Consideration of Consumption and Exports.
No. 56.—Corn Crops of the United States, 1866–1906.
No. 57.—Wheat Crops of the United States, 1866–1906.
No. 58.—Oat Crops of the United States, 1866–1906.
No. 59.—Barley Crops of the United States, 1866–1906.
No. 60.—Rye Crops of the United States, 1866–1906.
No. 61.—Buckwheat Crops of the United States, 1866–1906.
No. 62.—Potato Crops of the United States, 1866–1906.
No. 63.—Hay Crops of the United States, 1866–1906.
No. 64.—Number and Value of Farm Animals in the United States, 1867–1907.
No. 65.—Russia's Wheat Trade.
No. 67.—Ocean Freight Rates and the Conditions Affecting Them.
No. 68.—Cereal Production of Europe.
No. 69.—European Grain Trade.

The eight bulletins, Nos. 56–63, show the acreage, yield per acre, total production, and farm value on December 1 for forty-one years, for each State, of the following crops: Wheat, corn, oats, barley, rye, buckwheat, potatoes, and hay; and No. 64 presents the data concerning live stock for the same period. The primary object of these publications has been to epitomize in as complete and useful form as possible the final results of all comprehensive statistical investigations relating to the products enumerated which have been made by the statistical organization of this Department. These bulletins will save much labor in compiling tables in reply to the many inquiries that are being constantly received for statistical data upon these crops for specified States and years. The data contained in these bulletins were compiled from the annual statements of the Statistician. Forty-one such annual statistical statements have been made since the close of the civil war. The information contained in these bulletins is of especial value to economic and scientific students of the agricultural development of this country.

RECOMMENDATIONS.

ENLARGEMENT OF FIELD SERVICE.

The gradual increases which have been made by Congress in the Bureau's appropriations for the past several years have been used to very excellent advantage, and it is suggested that a small increase in

the number of special field agents will result in still further perfecting the work of the Bureau. It would make it possible to lessen the number of States which some of these agents are now required to travel over continually, and enable them to cover the territory assigned in greater detail and more thoroughly.

TRAVEL OF STATE STATISTICAL AGENTS.

Excellent results have been accomplished through the travel which has been performed by the State agents throughout their respective States, and it is believed that the allotment of increased amounts will be productive of good results and secure greater accuracy in their reports. It will also make possible the assembling of these agents this year in Washington, D. C., for a conference and instructions.

IMPROVED METHODS OF SECURING ACREAGE STATISTICS.

It is desired to extend the preliminary investigations which have been made in regard to improving methods of collecting statistics of acreages of the principal crops. The plan is to secure more detailed information by using certain counties in each State as units and having them traveled by local agents.

A QUINQUENNIAL CENSUS.

It is suggested that the agricultural and live-stock interests of the country would be benefited by a quinquennial census of the number of farm animals and live stock in the United States, and the acreage planted to the principal or more important crops, such as wheat, corn, cotton, tobacco, etc. Such census could be taken by the Bureau of the Census of the Department of Commerce and Labor in 1915 and be repeated every ten years thereafter between the regular census periods. There seems to be an urgent desire by the live-stock organizations, the National Board of Trade, and the principal commercial and agricultural organizations of the country for such an enumeration. The main reasons for taking a census of manufactures oftener than at the regular census each ten years apply with equal force to such a census of agriculture. Such a census would be useful to this Bureau for the purpose of furnishing a more frequent check, and would enable it to secure greater accuracy in the preparation of the annual estimates of crops and live stock.

COMMENT.

During the year the Bureau and its reports have not been the subject of unfavorable comment and criticism, and it appears that the efforts which have been made to strengthen and improve the crop-reporting service have been productive of good results, which are appreciated by the country at large. Generally favorable and complimentary comments have been received from agricultural organizations in the South and throughout the country expressing appreciation of frankness, promptness, and accuracy in the preparation and publication of the reports.

COMMITTEE ON DEPARTMENT METHODS.

Within the past couple of years the Committee on Department Methods made a very exhaustive and comprehensive inquiry and investigation into the methods of this Bureau in relation to the preparation of the official crop reports. Every opportunity and assistance possible was rendered by the officials of the Bureau, and nearly all of the recommendations contained in the committee's report had already been or have now been put into practice. Some of their suggestions require legislative enactment in order to become operative. In closing their report the committee made the following references to the present organization of the Bureau:

It is unquestionably difficult to make an accurate estimate of a crop yield when the crop is still immature and ungathered, and any Government office charged with the duty of making such estimates must in the nature of things make errors and be subjected to criticism therefor, whether such errors be great or small. The Bureau of Statistics has, therefore, in the past, and will in the future, be criticized on its estimates. The results reached on cotton by the Bureau of Statistics in recent years, 1904 excepted, have not, in our judgment, merited the condemnation or the bitter criticism directed against the Bureau. The men now in charge of the Bureau fully realize that the estimates made in the past can be materially improved. They are showing willingness to respond to suggestions made for the betterment of the service, and they are fully aware of the shortcomings of the Bureau arising from faults in its organization and methods.

It should be remembered also that the men now in control of the Bureau are not responsible for these faults. With the improvements herein suggested, and others that may be hereafter developed in the course of improved practice, the Bureau may be expected to achieve materially better results and to command for its estimates the confidence of the agricultural and commercial public.

NATIONAL BOARD OF TRADE.

The building up and perfecting of a statistical and crop-reporting service must necessarily be gradual and a matter of evolution. As this is true in all big undertakings and organizations, so it is true with a statistical service, and during the years in which the organization and methods of this Bureau have been gradually improved and perfected, it has secured much assistance from the advice and recommendations of the standing committee on crop reports of the National Board of Trade, which is composed of eminent and well-recognized statisticians.

At the recent annual meetings of the National Board of Trade, at Washington, D. C., the standing committee on crop reports submitted reports which contain the following references to the crop-reporting service of this Bureau:

Taken as a whole, the crop-reporting work of the Department of Agriculture the past year has been as closely to lines of accuracy as a reasonable view and intelligent understanding of conditions incident to such difficult operations can expect. The general public has been currently and regularly advised on questions of area, on prevailing conditions attending the situation of crops, and finally on the evidences of production.

The producer, the dealer, and the manufacturer, in each position of relationship to such information, wants and needs not only such evidences of probable or actual production, but wants that which can be accepted as of the fullest degree of reliability. The Government offices charged with such work deserve to be strengthened and encouraged, and not to be subject to reckless attacks and denunciation. The proposition from some sources that because of upheavals in commercial channels, due to influences of the official

information beyond the control or responsibility of the official service, this work should be abandoned, is without reason, and is not entitled to consideration. It is a matter of satisfaction to the committee that there are evidences of adoption of measures for betterment of results in matters relating to agricultural statistics.

The committee is impressed with the conviction that the Department of Agriculture has been making honest and earnest efforts for performance of good work, and that the Secretary of Agriculture has been resourceful and devoted in efforts for securing for the interests of the general public the best that can be done through human endeavors in the way of providing reliable information. His readiness to give recognition to any worthy suggestion calculated to secure possible betterment of the service, and his freedom of action in facilitating inquiry and investigation concerning the operations of the Department, are deserving of all commendation. That he has not done all the things which have been suggested or insisted should be done implies that action on his part in such matters can be expected only when the full knowledge which he commands concerning the effect of such action seems to justify such procedure.

REPORT OF THE LIBRARIAN.

U. S. DEPARTMENT OF AGRICULTURE,
OFFICE OF THE LIBRARIAN,
Washington, D. C., September 17, 1907.

SIR: I have the honor to submit herewith the executive report of the Library for the fiscal year ending June 30, 1907. The work for the above period was carried on under the direction of the Librarian, Miss Josephine A. Clark, whose resignation as Librarian of the Department took effect July 1, 1907.

Respectfully,

CLARIBEL R. BARNETT, *Librarian.*

Hon. JAMES WILSON, *Secretary.*

WORK OF THE YEAR.

ADDITIONS TO THE LIBRARY.

The number of books and pamphlets added to the Library by gift and purchase during the fiscal year ending June 30, 1907, amounted in round numbers to 4,000. The total recorded number of books and pamphlets in the Library on July 1, 1907, was 95,660. Among the many valuable sets of periodicals which have been completed during the fiscal year, especial mention should be made of two sets of entomological periodicals: The Societas entomologica rossica, Horae, and the Tijdscrift voor entomologie.

CATALOGUING.

The work on the card catalogue of the Library has progressed satisfactorily during the past fiscal year. The number of new cards added to the catalogue during the year was 24,222, which number far exceeds the number added in any previous year. The main catalogue now contains approximately 185,000 cards.

Though it is more fully described further on, mention should also be made here of the printed catalogue of periodicals and other serials added to the Library during the years 1901 to 1905, inclusive, which was prepared and published during the past fiscal year. Considerable progress was also made on a new edition of the catalogue of forestry publications which is in preparation.

CATALOGUE CARDS FOR DEPARTMENT PUBLICATIONS.

The printing of catalogue cards for Department publications in accordance with the plan described in the Annual Report of the Librarian for 1906 has been continued. During the past year 1,546 cards have been printed, which have catalogued all the current Department publications.

INDEXING AGRICULTURAL LITERATURE.

In addition to the cataloguing of the Department publications the Library has kept up to date the printed card index to the following important agricultural periodicals, namely: Die Landwirtschaftlichen Versuchsstationen, Landwirtschaftliche Jahrbücher, and Annales de la Science Agronomique. As pointed out in previous reports, entire sets of printed index cards for these three periodicals are available for purchase at a very moderate cost. The Library also has manuscript index cards for the whole set of the Journal für Landwirtschaft, which cards will be printed as soon as the demand for them will justify the cost of printing.

PERIODICALS.

The number of different scientific and technical periodicals and serials currently received in the Library during the past fiscal year was 1,815, exclusive of annual reports of societies and institutions. Of this number 642 were received by purchase and 1,173 were received by gift and exchange. As the number of periodicals received during the fiscal year 1906 was 1,652, the number received during the past fiscal year, 1907, shows an increase of 163, of which number 88 were received by purchase and 75 by gift and exchange. In June, 1907, was issued "Supplement No. 1 (1901-1905) to catalogue of the periodicals and other serial publications (exclusive of Government publications)." This supplement includes periodicals and serials acquired by the Library during the five years 1901 to 1905; also the publications of the agricultural colleges and experiment stations which were not included in the original catalogue. The number of periodicals and serials catalogued in the original catalogue of 1901 was 4,750, and the number included in the supplement is 2,650, making a total of 7,400 different periodicals and serials contained in the Library up to January, 1906, and since that date several hundred more have been added to the Library. The fact that all the periodicals and serials in the Library, exclusive of certain Government publications, are fully catalogued is reason for much satisfaction, as their usefulness is thereby greatly increased.

BINDING.

The number of volumes bound in the past year was 2,217, a decrease of 246 as compared with the previous year. This decrease, which is much regretted, was due to a lack of funds available for binding.

LIBRARY PUBLICATIONS.

The Library publications of the year include the four quarterly *bulletins* (Nos. 61–64) entitled "Accessions to the Department Library," comprising in all 256 pages, and the "Supplement No. 1

(1901–1905) to Catalogue of the periodicals and other serial publications," which comprises 217 pages and was issued in June, 1907, as Library Bulletin No. 37, Supplement No. 1.

USE OF THE LIBRARY.

The statistics kept at the loan desk of the main Library show a gratifying increase in the use of the Library from year to year. During the past year the charges made at the loan desk numbered 19,061, an increase of 825 as compared with the previous year. As explained in the report of last year, these statistics do not include a record of the circulation of the single unbound numbers of periodicals, nor do they include a record of the daily use of books deposited in the several bureaus and divisions of the Department, nor a record of the books used in the main Library reading room, but not taken out of the Library and therefore not charged at the loan desk. If it were possible to keep complete statistics of the use of all the books and periodicals belonging to the Library, no greater argument would be needed to show how vitally the Library is connected with the work of the Department.

As in previous years, the Library has continued to allow scientists outside of Washington the use of our books when this could be done without inconvenience to the scientists of the Department. The number of books borrowed during the past year by scientists outside of the city was 240, an increase of 102 as compared with the previous year. The circulation by States was as follows: Alabama 7, Arizona 31, California 10, Colorado 4, Connecticut 22, Florida 13, Illinois 13, Indiana 9, Louisiana 9, Maine 1, Maryland 9, Massachusetts 11, Michigan 5, Minnesota 1, Missouri 7, Nevada 1, New York 21, North Carolina 2, Ohio 15, Pennsylvania 4, Tennessee 4, Texas 5, Vermont 8, Virginia 1, Washington 4, West Virginia 9, Wisconsin 3, Wyoming 4, Hawaii 5.

This Library has in turn enjoyed the privilege of borrowing books from university and reference libraries in Boston, Cambridge, Ithaca, Madison, and St. Louis, and in addition has made very frequent use of the Library of Congress and of the libraries of the Surgeon-General's Office, Patent Office, Geological Survey, Smithsonian Institution, National Museum, and other Government offices. To all of the above libraries special thanks are due for the favors received.

RECOMMENDATIONS.

The appropriation for the purchase of books for the present fiscal year, while greater than that of the preceding year, is far from large enough to meet the demands of the Department. During the past few years the Department has grown rapidly and the Library appropriation has not increased proportionately. The new lines of investigation and work which have been undertaken by the Department have greatly increased the need for books, inasmuch as the facility with which scientific investigations can be carried on depends in a large degree upon the completeness of the collection of books at the disposal of the investigators. Furthermore, by the

centralization in the Library of the purchase of practically all books for the use of the Department in Washington, which centralization has been brought about in the past two or three years, the necessity for a much larger library appropriation is made still more pressing, since it is called upon to meet expenses hitherto provided for by other appropriations.

For the proper administration of the Library the services of two additional assistants are needed. The work of the catalogue division has much increased through the increase in the number of books and periodicals annually received by the Library, and an additional cataloguer is needed for the work. In the work with periodicals an additional assistant is needed whose time can be largely devoted to keeping the files of periodicals and serials complete and up to date, and to increasing the exchange list.

The need for safe, commodious, and convenient quarters for the Library becomes more urgent each year. At present the efficiency of the Library is seriously impeded by its crowded condition and by its lack of suitable work and reference rooms for the staff and for readers; therefore, in the consideration of the plans for the new administration building of the Department it is earnestly recommended that the present and future needs of the Library be given special attention.

REPORT OF THE DIRECTOR OF THE OFFICE OF EXPERIMENT STATIONS.

U. S. DEPARTMENT OF AGRICULTURE,
OFFICE OF EXPERIMENT STATIONS,
Washington, D. C., October 17, 1907.

SIR: I have the honor to present herewith the report of the Office of Experiment Stations for the fiscal year ended June 30, 1907.

Respectfully,

A. C. TRUE, *Director.*

Hon. JAMES WILSON, *Secretary.*

WORK OF THE YEAR, WITH RECOMMENDATIONS.

DEVELOPMENT OF WORK OF OFFICE OF EXPERIMENT STATIONS.

The work of the Office of Experiment Stations in its relations with the agricultural experiment stations throughout the United States has been largely extended during the past year on account of its new duties connected with the administration of the act of Congress of March 16, 1906 (Adams Act). Never before has there been such a widespread and thorough discussion of the nature, requirements, and limitations of the different classes of work which our stations have undertaken for the benefit of agriculture. As a result the organization of the stations has been greatly strengthened and a large amount of fundamental research has been inaugurated, while at the same time broader efforts have been made to reach and aid the masses of the farmers both by publications and by practical demonstrations of improved methods. In this forward movement this Office has taken an active part and has received in most gratifying measure the cordial sympathy and support of the stations. With the rapid growth of agricultural research in foreign countries, as well as in the United States, the task of reviewing the literature of agricultural science in the Experiment Station Record has greatly increased. While every effort is being made to make our review comprehensive, we are evidently not meeting the demand of our investigators and students, who especially desire a fuller résumé of the foreign literature. To satisfy this demand an enlargement of our resources will be required.

Each year now witnesses a great extension of the movement for the diffusion of agricultural education among the masses of our rural people. The National character of this movement has during the past year been conclusively attested by the passage by Congress of the Nelson amendment to the appropriation act for this Department

for the fiscal year 1908, in which provision has been made both for extending the ordinary agricultural courses in our colleges and for the training of teachers of agriculture for the elementary schools. It is more clearly evident than ever before that in accordance with American custom in other lines some National agency is desirable to focus the experience gained in our several States and in other countries, and without exercising any control, but rather stimulating local enterprise to aid in systematizing and developing an efficient system of agricultural education throughout the length and breadth of our land. The work of this character which this Office has done under the authority granted by Congress has been followed by such a demand for service over the entire range of agricultural education from graduate instruction to the most elementary forms of extension work that great embarrassment has arisen in the effort to select the few most important lines of endeavor which the very limited funds at our disposal would permit us to undertake. There is especial need that systematic effort should be made to glean from the great mass of material furnished by the work of this Department and the experiment stations those things which would be useful to our colleges, schools, and farmers' institutes, and to make these available to teachers and students in good pedagogical form. We shall do the best we can to make our educational work a useful factor in promoting the cause of agricultural education in the United States, but until our funds are increased this service will remain very limited in extent and in many ways comparatively unsatisfactory.

Investigations on the nutritive value of agricultural products used as human food have been continued during the past year in cooperation with colleges and experiment stations in different parts of the country. Taken as a whole, this work has constituted the largest and most comprehensive study of the problems of human nutrition thus far prosecuted on a scientific basis. Nearly 100 technical and popular reports and bulletins have been issued as the result of these investigations and have been widely distributed in this and other countries. Much has been done toward providing a scientific basis for the instruction on the food and nutrition of man now regularly given in numerous colleges and schools for women throughout the United States and for a rational system of practical dietetics in the Army and Navy, as well as in households, boarding schools, and charitable and reformatory institutions generally. The demand for information along these lines is now widespread and rapidly growing. This Department is the only agency having a comprehensive plan for the study of these problems and for the prompt diffusion of information on this subject among the people throughout the country.

It is therefore hoped that a way will be found to continue and develop these investigations, with a view to giving the people of the United States such information on this fundamental subject as will enable them to utilize as food in the most satisfactory way the varied products of our agriculture.

The work of the experiment stations in Alaska, Hawaii, and Porto Rico has been mainly along the lines laid down in previous reports. As useful results accumulate these stations are receiving more favorable attention from the agricultural people in their respective localities. Our main efforts are being directed toward the diversification

of agriculture and the establishment of those agricultural industries for which these regions are especially adapted. Congress having adopted the policy of granting these stations the same financial support for maintenance as is given from the National Treasury to the State experiment stations, it has been possible to enlarge somewhat the scope of the work and the number of agricultural experts in their staffs. To secure the best results, there should be further provision for buildings and general equipment if these stations are to be maintained in the same way as similar institutions elsewhere in the United States.

As a result of the liberal provision made by Congress for the Irrigation and Drainage Investigations of this Office, our work in these lines has been considerably extended. In irrigation great stress has been laid on securing such data as will show how the available water supply in different regions may be most economically used in agriculture and how waste and losses through seepage or otherwise may be reduced to a minimum. An effort has also been made to determine in what ways a limited water supply may be most effectively used to supplement "dry-farming" and furnish the farmers in the semi-arid region insurance against total loss of crops in years of drought, as well as the means of making their home life more attractive and satisfactory through the maintenance of gardens, shade trees, and lawns about their homesteads. We are also endeavoring to supply in popular form, through bulletins and demonstration farms, the information regarding irrigation needed by settlers from humid regions who are now coming in large numbers from our Eastern States and foreign countries to make their homes in the West.

In drainage we are studying those new problems which present themselves in irrigated and other regions where drainage for agricultural purposes has not been systematically employed. At the same time we are collecting data throughout the country which will show the areas of swamp lands in the several States and the requirements for their economical and successful drainage. As far as possible, we are also meeting the demands made by States and local communities for advice and assistance in the formulation of plans for the reclamation of land by drainage.

The extent and importance of the irrigation and drainage work now intrusted to this Office, as well as the public interest in these matters, would in my judgment warrant careful consideration of this subject by Congress with a view to the formulation of a permanent policy, under which the limits of governmental activity along these lines would be defined and a suitable and stable organization for such work would be established by statutory provision.

RELATIONS WITH AGRICULTURAL EXPERIMENT STATIONS.

The duties connected with the administration of the funds arising from the act of March 16, 1906 (Adams Act), have, as was expected, very materially increased the work of the Office in its relations with the experiment stations. At the request of this Office, the stations submitted outlines of projects to be carried on with this fund. Numerous questions arose as to the nature of the work actually contemplated in connection with these projects, and a large amount of correspondence was had with the stations in the settlement of these

questions. An effort has been made to arrive at a clear understanding in advance, in order that the stations might not be embarrassed by incurring expenses on account of lines of work which could not be approved at the end of the year. The result has been quite satisfactory. The stations now have a quite clear idea of the kind of work which under the Department's interpretation can be conducted under the Adams Act, and the decision of the Department to hold the fund for a high order of investigation has received general approval. The discussions which have followed the passage of the Adams Act have brought out very definitely the great need and opportunity for fundamental investigation in agriculture. It is also more apparent that the more simple and directly practical experiments which have been so popular in the past appeal strongly to local public sentiment and can more readily be supported by State appropriations than advanced investigations.

The plans for the Adams-fund work have been worked out with unusual care and deliberation, and taken as a whole they embody a large amount of investigation in the true sense, which will place agricultural science and research upon a higher plane. Considering the condition under which the first year's work had to be planned, the difficulty in securing men, the lack of uniform standards, and the diversity of views regarding what constitutes "original research" in agriculture, the programme must be regarded as very satisfactory. Not only has the amount of investigation greatly increased, but the outlining of the various undertakings in advance has also had the effect of systematizing the station work more thoroughly than ever before, and ultimately this should reflect favorably upon the activities of the stations in other lines. If the system inaugurated for the Adams-fund projects shall become more generally applied to the station work as a whole, it will be an important result of the first year's operations under the new act.

This Office has compiled a list of the projects of the several stations and these projects serve as a basis for the inspection of the work and examination of the accounts. A separate set of vouchers for the Adams fund is required, and it is expected that the relation of each expenditure to these projects can be readily explained. The examination of the work and expenditures now made in connection with the annual inspection has greatly increased the time required for the inspection. Many questions arise which require considerable discussion to settle satisfactorily, and on the other hand the station workers take advantage of the opportunity to inform themselves more thoroughly regarding the Department's attitude toward the Adams-fund work.

The same amount of attention has been given to the work under the Hatch Act as heretofore, and there has been no change in our attitude in regard to the use of that fund. A form of financial report has been devised which combines the report upon the two funds in a double-column arrangement. The classification for both funds is practically the same, so that the same headings are used. This form simplifies the making up of the report and will be a convenience in auditing.

In response to the large number of questions which have arisen from time to time in regard to the classification of expenditures a *circular* has been issued giving more specific information upon that

point and the classification of a considerable number of doubtful items. While in several instances the classification suggested is necessarily a more or less arbitrary one, the suggestions will secure greater uniformity in the financial reports of the stations and thus make them more comparable when reviewed or tabulated for publication.

The Adams Act requires that "on or before the first day of July in each year after the passage of this act the Secretary of Agriculture shall ascertain and certify to the Secretary of the Treasury as to each State and Territory whether it is complying with the provisions of this act and is entitled to receive its share of the annual appropriation." It is obviously impracticable to secure this information prior to July 1 in all cases through a personal inspection. The filing of projects in advance furnishes information as to the direction in which the funds are to be expended, and through correspondence and otherwise the Office is kept informed regarding the progress of these projects. The stations now have an additional motive for the regular conduct of their business and the systematic prosecution of substantial experimental researches.

Near the close of the fiscal year a circular was addressed to all the experiment stations asking for a statement of any new projects contemplated for the following year, and reply to this circular was made a condition of certification to the Treasury Department. In a large number of cases the circular brought forth a statement regarding the progress of the year, and in doubtful cases such information was required.

One result of the inauguration of work under the Adams Act has been a strengthening of the organization of the stations and a clearer differentiation between their legitimate work and that of the colleges, farmers' institutes, etc. In a considerable number of instances special officers have been provided whose main duties are in connection with the investigations under the Adams Act, and a number of stations are looking toward the provision of a practically separate staff for the station work, distinct from the teaching staff. This better provision for the station work will increase its efficiency, prevent serious interruptions, and make the station more strictly an institution for experimentation and research in agriculture.

The lack of men is one of the most serious drawbacks to development in this line, and it is now realized that the question of human equipment is the most vital question before the experiment stations to-day. During the past year the pressure has become intense, resulting in many changes of men from one locality to another and often preventing stations from inaugurating new lines of work. The well-trained man, competent to originate and conduct thorough and satisfactory investigations, is the all-controlling factor of success in agricultural research. Without such workers, generous funds and elaborate equipment become ineffectual. The present shortage of men is due in part to the development incident to the increased funds, and in large measure to the new standards which are being established for station work. These standards impose additional requirements and qualifications, and thus practically eliminate from consideration many who might formerly have been thought eligible for station positions.

We must look to the agricultural colleges to train more men for this important work and to inspire them with the proper spirit and point of view. This will necessitate a further differentiation of courses of study to meet the needs of agricultural scientists as contrasted with those of practical farmers. Not only must the standard of undergraduate courses be raised, but special graduate courses of the most thorough character must be provided. Otherwise the development of the experiment stations will be delayed and the agricultural interests of the country will suffer.

The institution of so much research of a higher order in connection with the agricultural colleges and experiment stations is already proving a strong inducement to men of a better type to engage in this work, and more young men of the right caliber are taking advanced courses in branches relating to agriculture. As soon as it becomes evident that our stations will pursue a consistent and permanent policy with regard to higher research in agriculture we may confidently expect a great improvement in the personnel of their staffs.

While the Adams Act has made satisfactory provision for a large amount of original research in agriculture, it is already apparent that the restrictions of this act, which are generally acknowledged to be most fortunate, will impose a considerable burden of expense which must be met with other funds. Specially arranged and equipped buildings will be required for some of the more elaborate researches, new lines of work will bring increased correspondence and miscellaneous business for the station, the duties of directors, accountants, and other administrative officers will be increased, and larger funds will be required for printing. In these and other ways, both directly and indirectly, the general business of the stations will be increased as a result of this new Federal grant. The States will therefore be called upon to supplement the Federal funds for the stations more largely than heretofore. Already this need has been recognized by a number of State legislatures, which have made appropriations for special buildings or otherwise liberally responded to the new requirements of the stations.

The question of suitable provision for the publication of the Adams fund work will soon become an important one. While the results of work of this character will ultimately prove of very great benefit to agriculture, its details will ordinarily have little interest for farmers or the general public. At the same time, in order to satisfy the proper demands of the scientific world and to give our agricultural investigators and students the information they should have regarding these researches, it will be highly desirable to have them published in as much detail and with as complete illustration as is usually done in the case of work of the same order in other branches of science. This will mean the providing of a different class of publications from the ordinary station bulletins and reports. Either the individual stations must establish with the aid of State funds a technical series of publications, which, though limited in editions, will be relatively elaborate and expensive, or Congress must make provision for the grouping together of the scientific work of the stations in a general series of special publications to be issued under the authority of the National Government.

To the world at large the latter course would undoubtedly be the *most satisfactory*, since this would bring the research work of the

stations together and establish a regular and permanent medium for its publication, thus making it readily accessible to scientists and students the world over. Foreign critics of our experiment station system have often said that under present conditions the National character of our system of agricultural research was obscured and the scientific value of much of the work of our stations was lost sight of because of the miscellaneous character of the station publications, and the multiplicity of the sources from which they emanated. There is little doubt that our stations would have a much better standing in the scientific world if their more scientific publications were differentiated from their popular ones and issued through a single regular channel. It is possible that an editorial board might be established through the Association of American Agricultural Colleges and Experiment Stations to represent the interests of the stations in this matter and that this board might act in cooperation with this Office in the preparation for the press of reports submitted by the individual stations. There is ample time for the elaboration of this or some other satisfactory plan for securing the suitable publication of the scientific work of our stations, but I feel sure there is real need that this problem should be carefully considered with a view to reaching a satisfactory solution in the near future.

The eleventh annual examination of the work and expenditures of the agricultural experiment stations which receive the National funds appropriated under the acts of Congress of March 2, 1887 (Hatch Act) and March 16, 1906 (Adams Act), with special reference to the fiscal year ended June 30, 1906, was made during the last year in accordance with the authority conferred upon the Secretary of Agriculture by Congress, and a report of this investigation, as required by law, included in the annual report of this Office for 1906.

As heretofore, the report was based upon three sources of information, viz, the annual financial statements of the stations rendered on the schedules prescribed by the Secretary of Agriculture in accordance with the act of Congress, the printed reports and bulletins of the stations, and the reports of personal examinations of the work and expenditures of the stations made during the year by the Director, Assistant Director, and two other expert officers of the Office of Experiment Stations.

The Assistant Director has continued to have special supervision of the business of the Office connected with the work and expenditures of the stations.

This Office has continued to follow and record the progress of agricultural experiment stations in foreign countries and to publish accounts of their organization, resources, and work in the Experiment Station Record and elsewhere.

RELATIONS WITH INSTITUTIONS FOR AGRICULTURAL EDUCATION.

The educational work of the Office of Experiment Stations for 1906–7 was carried on under the same general arrangement as in the preceding year, one section dealing with agricultural colleges and schools and the other with farmers' institutes and other forms

of extension work in agriculture. There was no increase in the funds available for this work, hence improvements in the service were possible only through a better understanding of the needs of agricultural educational institutions and a somewhat clearer differentiation of the educational work from the other work of the Office.

THE AGRICULTURAL COLLEGES AND SCHOOLS.

The work of the Office relating to agricultural colleges and schools has been continued under four general classes: (1) The collection and publication of information regarding the progress of agricultural education at home and abroad; (2) studies of different grades of American and foreign schools in which agriculture is taught; (3) work in cooperation with the Association of American Agricultural Colleges and Experiment Stations and other important associations dealing with educational matters; and (4) the giving of aid to agricultural colleges and schools and to State and local school authorities along lines of agricultural education. This work is in charge of Mr. D. J. Crosby, as expert in agricultural education.

(1) The department of agricultural education in the Experiment Station Record has contained quite a large number of brief abstracts and notes relating to this subject. The preparation of these involved the examination regularly of many educational journals and other publications, both American and foreign. The foreign publications, more than 1,000 in number, were reviewed by Miss M. T. Spethmann, who has also, as formerly, had charge of the preparation of the annual statistics and organization lists of the agricultural colleges and experiment stations. There have also been prepared and published a list of institutions in the United States giving instruction in agriculture, a circular on A Four-Year Course in Agriculture, a Yearbook article on Introduction of Elementary Agriculture into Schools, a bulletin on Exercises in Elementary Agriculture, and a review of progress in agricultural education in 1906. The latter deals with agricultural education throughout the world and includes, among other features, a suggestive course in nature study and elementary agriculture for the schools of California, the course of study for the Cecil County (Md.) Agricultural High School, and a detailed course in agriculture for the eleven industrial and agricultural schools in Georgia—courses which were prepared at the cost of considerable time and study in this Office. The mailing list of institutions, journals, and educators to whom the educational publications of the Office are sent has been entirely revised and put in stencil form.

(2) Studies of American and foreign schools in which agriculture is taught have been carried on as an incidental feature in connection with editorial work, and the number of cards in the index to these institutions has been increased by 330, making a total of 3,630 institutions listed. There have also been prepared during the year 1,200 cards of foreign agricultural research institutions. In connection with the annual inspection of agricultural experiment stations and on occasions when members of the staff have been called upon to attend important meetings, quite a large number of American colleges and schools of agriculture have been visited, but it has not been

possible to visit these institutions in any systematic way nor under circumstances favorable to a thorough study of their work.

(3) The educational work in cooperation with the Association of American Agricultural Colleges and Experiment Stations has been continued upon the same basis as formerly. The Director of this Office, as bibliographer of the association, reported at its last convention on some matters of historical interest in connection with the development of the pedagogics of agriculture. He has also consented to act as dean of the Graduate School of Agriculture during its third session in the summer of 1908 at Cornell University, and has continued to act as chairman of the committee of the association on instruction in agriculture. This committee has approved the bulletin on Exercises in Elementary Agriculture, which was prepared at its request in this Office, and also of proposed supplementary circulars to contain exercises on related phases of the subject. One of its subcommittees has nearly completed a secondary course in agronomy, and two others are working on reports on rural engineering and home economics. The completed reports of this committee have all been published by the Office of Experiment Stations and there has been such a steady demand for them that it was deemed advisable to issue a compilation of those dealing with collegiate courses in agriculture under the title, "A Four-Year Course in Agriculture," as mentioned above.

(4) The giving of aid to agricultural colleges and schools and to State and local school authorities along agricultural lines continues to be the most rapidly developing feature of our educational work. This is true even with reference to the older, well-established colleges and schools. Agricultural education is of such recent development in this country that courses of study and faculties are constantly undergoing readjustment. As a result the authorities in control make frequent demands upon this Office for advice and assistance concerning courses of study, new buildings, equipment, instructors, and other similar matters. On the one subject of home economics (often associated with agriculture in the agricultural colleges), the Office was called upon to make three rather lengthy compilations during the year. One of these related to the schools of cooking and domestic art in Great Britain; another to the introduction of domestic science courses in the land-grant colleges of this country, and another to domestic science schools in the United States. Much of the correspondence of the Office is of this nature, calling for information which can be furnished only after considerable study or the examination of numerous publications. During the year more than 2,600 letters were written on the general subject of agricultural colleges and schools.

Information is frequently sought concerning available candidates for positions in agricultural colleges and schools. This information the Office is now able to supply in part through its card directory of teachers and investigators in agriculture, which is now supplemented by a special list of those seeking positions. These lists contain about 1,400 cards and are revised annually.

Consistent with the policy of the Office for a number of years back, have been its efforts to keep pace with the growing demands upon it for advice and assistance in outlining courses of study, securing

teachers, and determining the policy of secondary and elementary schools in which agriculture is being introduced. The Office has aided in organizing a small agricultural high school in a rural community in Maryland, which has been so successfully conducted in temporary quarters with very inadequate facilities as to result in an appropriation of $5,000 by the county commissioners for the erection of a suitable permanent building and land for the school. Mr. H. O. Sampson, who was transferred early in the year from the Bureau of Soils to this Office, was furloughed to take charge of the school as principal and teacher of agriculture.

At the request of the governor of Georgia the expert in agricultural education of this Office was sent to that State to assist in outlining the policy and preparing the course of study for a system of eleven industrial and agricultural schools which were provided for by legislative enactment in the summer of 1906. This expert, after conferring with the State school authorities and officers of the State University, prepared detailed courses in agriculture, horticulture, and forestry, which, after receiving the approval of the dean of the college of agriculture, were adopted at a meeting of representatives from the different local boards of trustees held in Atlanta, May 23, 1907. The interest which farmers are beginning to take in the education of their children along agricultural lines is indicated by the fact that local contributions amounting to over $800,000 were made for the equipment of these schools in Georgia.

There is a growing demand for instruction in agriculture at teachers' institutes and summer schools for teachers. Mr. H. O. Sampson spent five weeks of the summer of 1906 in the teachers' institutes at Wisconsin, Pennsylvania, and Maryland. Largely as a result of this work, the Office received 51 requests for similar aid this year, but only a small portion of these requests could be complied with by the temporary employment of Mr. Sampson during his school vacation. This Office can not afford the salary and traveling expenses necessary to keep Mr. Sampson in the field where services such as he can give are in so great demand.

All through the year there have been numerous requests for addresses on various phases of agricultural education. The Director has spoken at State teachers' associations, conventions of farmers and school officers, college commencements, and other important meetings; the expert in agricultural education has taken part in about a dozen such meetings, and other members of the Office have given occasional addresses.

PLANS FOR 1906–7.

Expansion of the educational service of the Office of Experiment Stations is out of the question so long as the funds for this work are limited as at present. Improvement of the service may be possible through better organization of the work and the publishing of lists and circulars which will save time in correspondence, and it is along these lines mainly that efforts will be directed during the ensuing year. Several publications now under way will be completed, among these the secondary course in agronomy mentioned above, and a circular for common schools containing exercises intended to illus-

trate a few fundamental chemical terms which are essential to an understanding of the most elementary principles of agriculture.

Two projects mentioned in my previous report will have to be delayed until more liberal funds are provided. These are (1) an inquiry concerning the available facilities for preparing teachers of agriculture, and (2) a study of negro schools of agriculture and means of improving them. Both projects could be studied in a preliminary way at long range, but no conclusions of real value could be arrived at without personal visits to the institutions concerned at times when their work is in active progress. In such studies it is necessary to get in touch with the work actually in progress, not what is vaguely outlined in the imagination or advertised to attract students. These inquiries are important at the present time, owing to the increase of Government aid to land-grant colleges, partly for the training of agricultural teachers, and to the fact that the normal schools in nearly every State and Territory are endeavoring to meet the demand for teachers trained to present the subject of agriculture in an attractive and efficient way. The first thing needed is knowledge of how those schools which have been teaching agriculture for a number of years have succeeded, in order that the schools now starting on the work may avoid the failures which frequently attend the inauguration of a new enterprise.

I called attention also in my last report to the desirability of issuing a separate serial publication on agricultural education to be sent free to all teachers and school officers who request it. The limited space which can be devoted to the department of agricultural education in the Experiment Station Record is entirely too restricted for a review of even the most important literature of agricultural education. Furthermore, the Record is not available to the teachers most in need of information, being sent chiefly to officers of the agricultural colleges and experiment stations. Progress in agricultural education during the next decade will be most marked in schools of secondary and elementary grade, and a publication calling attention to the best thought and work along these lines, which could be widely circulated at small expense, would impart a strong impetus to the movement. The field is now unoccupied and it is not likely to be occupied by any publication which could treat the subject so widely in all its phases as a publication issued from this Office.

Particularly as regards the subject-matter which is needed to form suitable courses of instruction in agriculture and to aid the teachers in elementary and secondary schools in adapting such courses to the requirements of different regions and different classes of students, this Office is in a position to render a service which it is believed it would be difficult for any other agency to perform. This Office regularly gathers and reviews practically all the literature on agricultural subjects issued by public and private institutions throughout the world, including State and National departments of agriculture, the agricultural colleges and experiment stations, and publishing houses of all descriptions. Out of this mass of material it could at comparatively little expense glean and put in pedagogical form much information which would be of very great service to teachers and students of agriculture in every State and Territory. If elementary instruction in agriculture is to be established in an effective manner

and kept thoroughly alive and up-to-date, our schools must constantly receive and utilize the new knowledge which the institutions for agricultural research and advancement are accumulating.

The information now issuing from so many sources and in so many languages and forms must, however, be worked over, selected, and put in usable form before the schools can properly utilize it. This would seem to be a proper function of the National Department of Agriculture and of that branch of this Department which is most closely in touch with both research and educational institutions working along agricultural lines.

THE FARMERS' INSTITUTES AND EXTENSION WORK.

This Office has continued its efforts to promote the general interests of the farmers' institutes throughout the United States in cooperation with the State directors and local managers of institutes. It has also aided the agricultural colleges, experiment stations, and other organizations in the more general diffusion of agricultural information and education among the masses of our rural population under various forms of so-called "extension work." This work of the Office has continued to be performed under the immediate direction of the farmers' institute specialist, Prof. John Hamilton.

THE FARMERS' INSTITUTES.

Since the close of the fiscal year 1907 reports have been received from the directors of farmers' institutes in twenty-nine States and Territories. They show that there has been a steady increase in the attendance as shown in the number present at each session. There has also been a considerable increase in the amount of money appropriated for carrying on the institutes. The States of Florida and Washington, reported in 1906 as having suspended their institutes for lack of funds, have both been granted appropriations by their legislatures and will reopen their institute work next year. New Mexico, which had also failed in securing an appropriation last year, again made application to the legislature of 1907 for support, but was denied. Notwithstanding this failure to get State aid, the institutes were maintained in 1906–7 by the agricultural college and experiment station and funds have likewise been set apart for carrying on the work during the season of 1907–8. The State of Arkansas has for the first time recognized the institute work by making an appropriation of $3,000 to the agricultural experiment station for institute expenses for the biennial period ending June 30, 1909.

Of the twenty-nine States and Territories reporting, twenty-eight report the following: The total attendance at all of their institutes in 1907 was 1,335,949, which represents an increase over the attendance in these States and Territories in 1906 of 305,403. The total number of institutes held in 1907 was 3,056, as against 2,696 in 1906, an increase of 360. The appropriations for institute work in the States reporting for 1907 were $219,109.98, an increase of $18,977.70 over the appropriations made the previous year.

Thirteen States are reported as having held round-up institutes. *One State* held several sessions in field demonstration work, with an

aggregate attendance of 800, and another reports normal meetings for institute instruction and special fruit-growers' institutes and dairymen's institutes held at various times, with an aggregate attendance of 10,000. An agricultural Chautauqua was held in one State, continuing through ten sessions, with an attendance of 2,125.

Seven States held women's institutes. In Kansas 2,794 boys engaged in corn contests in 40 counties; 250 girls were listed in contests in the growing of flowers, and 150 in contests in home gardening. In Indiana 8 summer institutes were held specially for farmers' wives and children, and in Illinois 60 out of 102 counties were represented at the winter (two weeks) short course at the university at Champaign by winners in corn-judging and bread-judging contests.

Special-subject institutes are rapidly growing in favor. Most of the States have held special dairy, fruit-growing, corn-judging, and cattle-judging institutes. These meetings were devoted to the discussion of but one of these topics, were continued from two days to a week, and were conducted by expert instructors, who gave practical demonstrations in connection with their lectures.

The number of States holding normal institutes for the instruction of their lecture force is increasing. The necessity for equipping lecturers to meet the demands of the institute work is constantly growing more pressing, and the State directors are endeavoring to add to the number of those who can be utilized for instruction work by offering them opportunity to acquaint themselves with the latest information in their several specialties. They are doing this by bringing their corps of instructors together at their State experiment stations and agricultural colleges to hear lectures by the teaching and investigation force at these institutions.

The grade of instruction which the institutes require is constantly being elevated. To accomplish this the State directors are obliged to select their lecturers with greater care than formerly, and consequently find themselves embarrassed in securing a sufficient number to carry on the work. The necessity for some organized method for supplying competent institute teachers is becoming greater each season and will doubtless result in compelling the institute managers to employ lecturers for the entire year or at least for such period as will justify competent men and women in making this kind of work a profession to be pursued as continuously as that of a professorship in a college or normal school.

With the aid of the State directors an account of the institute work in the several States during 1906 was prepared and published in the annual report of this Office for that year. Our printed list of farmers' institute directors and lecturers was also revised and brought up to date.

ILLUSTRATIVE MATERIAL FOR INSTITUTES.

Frequent requests are received for material illustrative of various agricultural subjects. The six sets of syllabi of illustrated lectures that were prepared over two years ago have met with general approval. During the past winter these lectures have been in constant demand, showing that they are meeting a want that is quite widely extended and that they are presenting the topics which the lectures discuss acceptably. The approval with which the lectures have

been received seems to justify the extension of this method of giving instruction to include a wider range of topics. A number of experts in different Bureaus of this Department have consented to prepare syllabi upon subjects with which they are most familiar. Arrangements have been completed with specialists outside of the Department for four additional illustrated lectures.

AMERICAN ASSOCIATION OF FARMERS' INSTITUTE WORKERS.

This Office has continued to work in close cooperation with the American Association of Farmers' Institute Workers. A successful meeting of this association was held at Baton Rouge, La., in November, 1906, and the proceedings have been published in Bulletin 182 of this Office. This association has been more thoroughly organized by the appointment of a number of standing committees to carry on definite lines of study of institute problems during intervals between the annual meetings. Questions relating to the more effective organization of the institutes are receiving special attention.

MOVABLE SCHOOLS.

The movement for supplementing the farmers' institutes by the holding of short courses of instruction in special subjects at the agricultural colleges and in different agricultural districts is growing rapidly, and already attempts are being made to organize and develop these movable schools. To aid this movement by showing definitely the character of courses of instruction which might be given on this plan this Office has arranged with agricultural experts for the preparation of a number of such courses. Two of these have already been published—a course in cheese making, by Dr. L. L. Van Slyke, of the New York State Experiment Station, and a course in fruit growing, by Prof. S. B. Green, professor of horticulture in the Minnesota Agricultural College.

EXTENSION WORK IN AGRICULTURE.

In cooperation with the standing committee on extension work of the Association of American Agricultural Colleges and Experiment Stations, this Office has made an extended study of the agencies outside of the farmers' institutes which are engaged in diffusing agricultural education among our rural people. The results of this investigation have been embodied in reports of the committee of the association and have been published as circulars of this Office. It is evident that a broad field of usefulness is opening before the agricultural colleges in extending their work of instruction among the masses of agricultural people who can not attend the courses given at these colleges. They are now beginning to organize and develop an adequate system of extension work in agriculture. To aid them in this work they are calling on this Office for services which are entirely beyond our power to perform with our present force. Since the National Government is so fully committed to the policy of giving the States assistance in diffusing scientific and practical information on agricultural subjects among our rural people, it would seem a wise thing to provide the comparatively small fund

needed to make this Office an efficient clearing house for this forward movement in agricultural education.

This Department and the agricultural colleges and experiment stations are doing a great work through their publications and courses of instruction, but as yet the masses of our farmers are only indirectly and superficially affected by the work of these institutions. Strenuous efforts and a broadly organized movement will be required to bring home to the masses of our farmers the results of exploration and research on their behalf. It is time that careful attention should be given to devising efficient ways and means for completing the great work of agricultural advancement to which both the Nation and the States have committed themselves.

AGRICULTURAL EXTENSION IN FOREIGN COUNTRIES.

As far as possible this Office is following the progress of agricultural education in foreign countries, and the general results of this study may be briefly summed up as follows:

Foreign countries for many years have appreciated the importance of instructing rural people in agriculture. In addition to agricultural teaching in their universities, colleges, normal schools, academies, and secondary and common schools, numerous special classes of adults are organized in these country districts for instruction by itinerant methods. Professors of agriculture under government direction are sent out to give instruction in the normal and rural schools and to organize farmers' societies for the promotion of agriculture. Numerous agricultural high schools have been established, particularly in Denmark and Sweden, and are attended by large numbers of rural people of mature years. Demonstration fields showing the effects of various manures, methods of culture, and varieties of seeds upon crop production are found everywhere. More than 3,000 of these demonstration fields and farms are in operation in France alone.

Movable schools of agriculture form an important part of the educational system in all of these countries. They embrace schools of general agriculture, schools of forestry, horticulture, market gardening, apiculture, aviculture, dairy schools, poultry rearing, farriery, domestic science, and on other similar agricultural subjects. Expert advisers are employed by the state to visit individual farmers and give advice with regard to the methods of operation best adapted to their conditions. Universities and colleges are extending their activities to outlying communities, to farming people who are unable to leave their farms to attend classes at the collegiate centers. The practical results of the foreign system of agricultural research and education are shown in the increased production of these countries as compared with the United States, where the masses of the farmers have not been reached by organized educational agencies.

The following figures, giving the average production of wheat, rye, oats, barley, and potatoes in Austria, Belgium, France, Germany, the Netherlands, Sweden, Great Britain, and Ireland for the years 1903, 1904, and 1905, as furnished by Mr. G. K. Holmes, of the Division of Foreign Markets, Bureau of Statistics, of this Department, compared with the average of these same crops in the

United States as given in the census of 1900, show how much greater are the crop yields in these countries than in the United States.

Average yields of crops in eight European countries for 1903, 1904, and 1905 compared with average yield of the United States as reported by the Census for 1900.

[Bushels per acre.]

Crop.	Eight foreign countries.	United States.
Wheat	28.42	12.5
Rye	24.5	12.4
Oats	43.56	31.9
Barley	34.9	26.8
Potatoes	180.23	93.0

These reports show an average excess per acre abroad over production in the United States of 127 per cent for wheat, 97 per cent for rye, 36.8 per cent for oats, 30 per cent for barley, and 93 per cent for potatoes.

At the prices prevailing in 1900 such an addition to the crops of the United States would be equivalent to an annual increase in value in these five crops over that reported in the census of 1900 of $666,483,219, or 90 per cent. If the same percentage were applied to the total crop production of that year in the United States the increase would amount to $2,619,124,796.

If, instead of taking the general averages for the three years for all of the foreign countries alluded to, there are selected the averages of only the most productive years, a much higher percentage of increase is shown than is given in the general averages of all of the years taken together. The following table showing the averages of crops per acre in five foreign countries for selected years compared with the average in the United States in 1899 is suggestive:

Average yield of crops in five European countries for selected years compared with average yield of the United States for 1899.

[Bushels per acre.]

Crop.	Great Britain.		Ireland.		Belgium.		Netherlands.		Germany.		United States.	
	Year.	Yield.	Year.	Yield.	Year.	Yield.	Year.	Yield.	Year.	Yield.	Year.	Yield.
		Bush.		*Bush.*		*Bush.*		*Bush.*		*Bush.*		*Bush.*
Wheat	1905	33.8	1905	37.8	1904	35.1	1904	31.1	.....	.....	1899	12.5
Oats	.....	.....	1905	56.9	1903	68.5	1903	56.3	1903	51.2	1899	31.9
Rye	.....	.....	1905	27.0	1903	34.7	.....	.....	1904	24.9	1899	12.4
Barley	1905	35.0	1905	46.4	1904	50.7	1903	48.5	1903	36.3	1899	26.8
Potatoes	1904	234.8	1905	207.2	1904	244.3	1904	240.7	1905	216.7	1899	93.0

If the averages are selected from the most productive years of the seven foreign countries—France, Germany, Great Britain, Ireland, Sweden, Belgium, and the Netherlands—out of the three years 1903, 1904, and 1905, as reported, the increase if applied to the five crops in the United States—wheat, oats, rye, barley, and potatoes—as reported in the census of 1900 would represent an additional value of $812,253,344, or 109.86 per cent, and if this percentage is applied to the entire crop production of this country, it would amount to an *increase* of $3,197,078,335 over the reported aggregate yield for that year.

There can be little doubt that an important factor in this increased average production per acre by foreign countries over the United States is the systematic methods pursued by these countries in carrying information respecting improved agricultural operations directly to the farming people through extension methods of education. Similar methods adopted and carried out in this country will undoubtedly produce like beneficial results.

It is a matter worthy of special note that most of the information given abroad to farmers is given through personal teaching, advice, and instruction, and not through bulletins and books. This fact is most significant in that it is a radical departure from the methods pursued in the United States, which has thus far depended almost solely on the dissemination of agricultural information through the printed page.

The movement, therefore, that looks toward the placing of the living teacher in direct contact with the tiller of the soil through the farmers' institute, the movable school of agriculture, and the itinerant advisory professor, as well as the teaching of agricultural subjects to children in the public schools, is in the right direction and is in conformity with the best practice and most successful results secured after many years of experiment in education in foreign countries.

PUBLICATIONS OF THE OFFICE.

While the publications of the Office have changed but little in character during the past year, they have increased materially in number though not in volume as compared with the output of the previous year. There has been a continuation of earnest efforts to restrict publication to the lowest limits consistent with the efficient performance of the functions of the Office.

The recent progress of agricultural investigation throughout the world has been so rapid that it is now exceedingly difficult to present an adequate record of it with the facilities available in the Office and the present printing limitations. The steady growth of the work of the experiment stations in Alaska, Hawaii, and Porto Rico, the agricultural colleges, schools, farmers' institutes, and other educational agencies, and the special lines of investigation in nutrition and irrigation and drainage, has also contributed to increase the necessary publication work of the Office.

During the year the Department published 85 documents prepared by this Office (not including revised reprints, separates, etc.), aggregating 4,946 pages. These documents include 13 numbers of Experiment Station Record; 21 technical bulletins; 1 bulletin and an annual report of the Alaska Experiment Station; 1 bulletin (English and Spanish editions), and an annual report of the Porto Rico Experiment Station; 2 reports, 11 Farmers' Bulletins (including 6 numbers of the subseries Experiment Station Work), 7 circulars, 3 articles for the Yearbook of the Department, 9 lists of experiment station publications, and various miscellaneous documents. Two other numbers of the Experiment Station Record, 6 technical bulletins, 1 annual report of the Office, an annual report of the Hawaii Station, 2 Farmers' Bulletins, 1 circular, and several miscellaneous documents, containing about 1300 pages, were prepared and submitted for publication before the close of the fiscal year. The policy

of reprinting a limited number of separates of individual articles contained in larger reports was continued with satisfactory results. Twenty-one such separates, aggregating 563 pages, were reprinted in editions of varying size to meet the actual demands for the articles.

Several of the earlier technical and farmers' bulletins of the Office were exhausted during the year and were reprinted, in many cases with complete revision or more or less important additions and corrections.

The publications prepared by the Office during the past year were as heretofore of five main classes: (1) Annual reports, including the administrative report of the Director and the larger annual report of the Office; (2) Experiment Station Record, which gives a technical review of the current literature of agricultural investigation throughout the world, and Experiment Station Work, which is published periodically in the Farmers' Bulletin series of the Department and gives a popular summary of some of the more salient practical results of the work of the experiment stations; (3) publications relating to the food and nutrition of man, consisting of technical and popular bulletins, circulars, etc., reporting or based upon the results of nutrition investigations conducted under the auspices of the Office; (4) publications relating to irrigation and drainage, which include reports, technical and popular bulletins, circulars, etc., giving the results of the irrigation and drainage investigations of the Office; (5) educational and other publications, including those relating to agricultural education in general, the work of farmers' institutes, proceedings of the Association of American Agricultural Colleges and Experiment Stations, and of the Association of Farmers' Institute Workers, and similar publications, and the card index of Experiment Station literature, besides miscellaneous documents of various kinds.

ANNUAL REPORTS.

During the past year the Office issued as usual two annual reports—one, the administrative report of the Director (of 66 pages), giving a summary of the work of the Office during the year, for incorporation in the Annual Reports of the Department, and the other, the Annual Report of the Office (of 413 pages), specially authorized by act of Congress. In the latter administrative details are reduced to a minimum, and an attempt is made to show the progress of agricultural research and education in the United States during the period covered by the report by means of a detailed report on the work of this Office and of the several agricultural experiment stations, and by articles illustrating progress in nutrition, irrigation, and drainage investigations, in farmers' institutes and agricultural education, and in various special lines of investigation at the experiment stations.

EXPERIMENT STATION RECORD.

During the year Volume XVIII of Experiment Station Record has been completed. The scope of the review has remained practically unchanged, covering the publications of the agricultural experiment stations in the United States, the United States Department of Agriculture, the researches of experiment stations and similar institu-

tions in all parts of the world, and a large number of articles having a direct bearing upon agricultural science and practice, which are published in the journals of this country and abroad. Its character as a world review of agricultural experimentation has been maintained, but the limitations of space referred to in previous reports have prevented the abstracts being issued as promptly as desirable, and also in many cases have made them too brief to meet the needs of experiment station workers. Requests continue to come to the Office for more detailed abstracts, especially of foreign articles, as these are rarely accessible to station workers in the original.

The value of the Record as a well-nigh indispensable aid to agricultural experimentation and research becomes more evident each year. This finds frequent expression at meetings of station men and in correspondence, and it is now generally recognized that the journal is one of the most important factors in the development of agricultural research. Not only does it economize the time of station and college workers, but it makes accessible to them a vast store of information which would otherwise not reach them, and renders their work more efficient by enabling them to plan it with an intelligent knowledge of the present status of investigation along their particular lines.

No new features have been introduced during the past year. Owing to the interest in agricultural research of a higher order which has been stimulated by the passage of the Adams Act, greater attention has been given in the editorials to the discussion of questions relating to that feature of the stations' activity. There have been separate editorials, for example, on The Attitude of the Experiment Stations Toward Agricultural Research, The Kind and Character of Work Under the Adams Act, Development of Public Sentiment for Agricultural Investigation, Progress in Medical and in Agricultural Science and Practice, Relation Between Investigation and Instruction, Problems for Investigation on Soil Fertility, Scientific Aspects of Plant Breeding Work, The Adams Fund Projects and What They Show, The Individual as a Factor in Agricultural Research, Agricultural Research as a Career, The Present Need of Men, and The Training of Investigators in Agriculture. In this way public attention has been drawn to the salient features of agricultural investigation as distinguished from the more immediately practical aspects, and the general principles to be observed in organizing this new work have been enunciated. There are many evidences that these articles have materially aided in clarifying views regarding the distinctive features of agricultural investigation, its ultimate benefits to agricultural practice, and the conditions and men necessary to its successful prosecution.

The demand for the numbers of earlier volumes of the Record has continued to increase. This demand has come from a great variety of libraries and public institutions, as well as from agricultural workers. These applicants, recognizing the value of the Record as a storehouse of information, are making every effort to complete their files. A notable feature of the demand has been the large number of requests from members of the Department force. Many of the requests are from new men who have recently come into the work, and others have arisen from the establishment of field laboratories or demonstration farms on a more or less permanent basis, at which

the need of a set of the Record is urged. An attempt has been made to meet these requests so far as the limited supply of back numbers would permit. Many of the earlier issues are exhausted. A considerable number of issues were reprinted in small editions during the year prior to the destruction of the plates by the Public Printer.

During the year three members of the editorial staff of the Record have left the service of the Office. Mr. C. B. Smith and Dr. H. W. Lawson had been on the Record force for about eight years and had rendered very efficient service. Their going is a distinct loss. Mr. B. P. Fleming, who had been abstracting the articles upon agricultural engineering for about a year, resigned to accept a position in the New Mexico College and Station. He had shown special aptitude and fitness for the work. With the beginning of the year Mr. J. B. Morman assumed charge of the abstracting in rural economics, and during the spring Mr. E. J. Glasson succeeded Mr. C. B. Smith in horticulture and forestry. The other vacancies are yet to be filled. Aside from these, the preparation of fuller abstracts in accordance with the present demand and the extension and scope of the Record will necessitate an increase of the editorial staff. In several departments the field is too large to be covered satisfactorily, in addition to the other duties imposed upon the editors; and the present value and importance of the Record to the work of this Department, of the agricultural colleges and experiment stations, and agricultural education and experimentation in general are such as to merit an increased appropriation to the Office to meet the present need.

EXPERIMENT STATION WORK.

Six bulletins of the series known as Experiment Station Work were issued at regular bimonthly intervals during the year, first in large editions in the regular Farmers' Bulletin series of the Department, and afterwards in smaller editions (3,500 copies) with consecutive paging, so that they may be found with index, table of contents, etc., in convenient form for reference. The second volume of 20 numbers of this series was completed during the year and title-page, contents, and index of the volume have been prepared.

This series of bulletins gives popular summaries of some of the more important practical results of experiment station work and attempts to do for the practical farmer what the Experiment Station Record does for the investigator and technical reader. Being published in large editions and widely distributed, these bulletins disseminate the practically useful results of experiment station work more thoroughly than can be done by the individual stations themselves through their comparatively limited editions of bulletins and reports, which, moreover, are in many cases restricted to distribution in the particular State in which the station is located. The fact that these bulletins present careful and conservative summaries of the best available knowledge on a great variety of agricultural topics makes them especially useful in answering inquiries on such subjects.

As heretofore, Mr. W. H. Beal has had general editorial management of this series, the articles for which are prepared by the members of the editorial staff of the Experiment Station Record.

OTHER PUBLICATIONS OF THE OFFICE.

The other publications of the Office consist chiefly of (1) technical reports, bulletins, and circulars, including those on nutrition (see p. 50), irrigation and drainage (see p. 70), and farmers' institutes and agricultural education (see p. 12), annual reports (see p. 22), and miscellaneous documents; and (2) Farmers' Bulletins, including the series known as Experiment Station Work (see p. 24). The supervision of the editorial work involved in the preparation of these publications for submission to the Division of Publications constitutes the special business of the Editorial Division of this Office, of which Mr. W. H. Beal is chief.

CARD INDEX.

Copy for 800 cards of the index of experiment station literature was prepared in the Office and forwarded to the Division of Publications during the year. This keeps the index as nearly up to date as has been found practicable. Some of the earlier cards, of which the supply has been nearly exhausted, have been reprinted in order to meet the increasing demand for sets of this index. The number of index cards distributed has reached 28,300. The receipts from sales of the index during the year were $171.70.

BIBLIOGRAPHICAL WORK.

The Office prepared two publications during the year of special bibliographical importance—Bulletin 180, which gives a chronological list of publications of the agricultural experiment stations in the United States from their organization to June 30, 1906; and Circular 70, which is a classified list of the publications of the Office of Experiment Stations from its foundation to June 30, 1906. These lists are especially useful to librarians and others interested in completing files or studying the literature of agricultural investigations in the United States. The lists show that the experiment stations, up to June 30, 1906, had published 7,667 reports and bulletins on various phases of agricultural investigation, the Office set of these publications comprising 825 good-sized bound volumes; and that the publications prepared by the Office up to the same date comprised 17 volumes (aggregating 195 separate numbers) of Experiment Station Record, 13 annual reports, 169 bulletins, 66 circulars, 81 Farmers' Bulletins, and 40 Yearbook articles, besides a large number of miscellaneous publications.

The Office now issues lists of current station publications at monthly, instead of bimonthly, intervals. This change was made in response to requests from many different sources for more prompt notification of issue of station publications, and makes these lists uniform with the monthly lists of Department publications.

The collection of station publications has been continued as heretofore, and additions have been made to the sets of Department and station publications at the Alaska, Hawaii, and Porto Rico stations. A large number of foreign publications of all kinds have been received as exchanges. Many duplicates of station and other publications were received, a considerable number of which were distributed to *college and station* libraries and officers.

Considerable progress has been made during the year in completing a set of the books published by agricultural college and experiment station officers. The collection now includes nearly 500 volumes. A list of these books was prepared and published in the last report of the bibliographer of the Association of Agricultural Colleges and Experiment Stations.[a]

The bibliographical work of the Office, including also the care of its special library and the handling of the large amount of periodical literature reviewed in Experiment Station Record, has grown to such proportions that it has been found necessary to reorganize it during the past year. This important feature of the Office work has now been put on a very efficient basis, under the charge of Miss E. L. Ogden.

The rapid growth of the literature of agricultural research in this country and abroad has created a demand on the part of investigators and students in this Department, the experiment stations, and the agricultural colleges for special bibliographical work in order to enable them to keep up with the literature of their specialties and avoid undesirable duplication of work. Such bibliographical work can best be done by persons with scientific training and literary experience who are accustomed to traverse the literature in special lines. These requirements are met by the editorial force of this Office. The assistance rendered by the expert force of the Department Library is also of very great value in such work. It would be possible by a small increase of funds to greatly extend the cooperative work of the library and this Office along this line. Examples of useful work of this character which have been begun in the Office but remain uncompleted from lack of funds are a compilation of the ash analyses of farm products and a bibliography of nitrogen assimilation.

INSULAR STATIONS.

The experiment stations in Alaska, Hawaii, and Porto Rico have made distinct progress during the past fiscal year. In each Territory the spheres of influence of the stations have been enlarged and their ability to assist in developing and extending agricultural practices is becoming better recognized. At each station the diversification of agriculture is recognized as of vital importance to the welfare of the community served. In Alaska pioneer work is necessary to develop agriculture as an industry, and attention is being given at the different stations to some of the more important branches, such as grain growing, stock raising, dairying, orcharding, and gardening. In Hawaii attention is given to industries that will supplement sugar production, the one great agricultural industry of the islands. In Porto Rico the possibilities of the restoration of former industries and the introduction of new ones are being investigated.

The continental United States annually consumes tropical products to the value of more than $200,000,000, and it is the desire of those connected with the insular stations that as large a proportion of these products as possible be provided by our insular possessions. Already in Hawaii and Porto Rico the stations have demonstrated the practicability of improving the practices under which established industries are conducted and the possibility of successfully entering

[a] U. S. Dept. Agr., Office Expt. Stas. Bul. 184, p. 21.

upon others that are new or neglected. The Porto Rico Station has done work of great value in showing the necessity for the proper use of fertilizers, the importance of seed beds for coffee and tobacco, the advantage of thinning the shade on coffee plantations and cultivating the trees, improved methods of packing and shipping tropical fruits, experiments in improving farm animals, the value of tile drainage, etc. In Hawaii the station has shown the commercial possibility of growing tobacco of excellent quality, of rubber cultivation, the extension of sisal growing, better methods for the shipment of tropical fruits, introduction of new agricultural products, the protection of agricultural products against their insect and fungus foes, and the improvement of rice and methods of its culture; in fact, the station has done more to diversify the agriculture in the Hawaiian Islands during the past six years than all other agencies combined.

The lines of work at the several stations have not been materially changed during the year. Some new investigations have been taken up and others completed or temporarily postponed, but they were all in continuation of the policy of encouraging diversified agriculture.

The Alaska stations report progress in the respective lines of work to which each branch is now restricted. The horticultural work at the Sitka Station is very promising, and more than 12,000 fruit trees and shrubs have been distributed from the station throughout the Territory. The experiments in plant breeding to secure greater hardiness give promise of results within a few years. At the Copper Center Station a late spring, followed in August by killing frosts, prevented most of the cereals from maturing, but the injured crops were cut and cured for hay, of which 22 tons were sold at an average price of about $200 per ton. At Rampart extensions to the area of cultivated land were made and a station building and residence erected. All the important fall and spring sown cereals matured at Rampart, as has been the case every year since the station was established. At the Kenai Station particular attention was paid to the new herd of Galloway cattle and the making of grain hay for winter forage. An equipment of implements was forwarded to Fairbanks, and the station reserved in that vicinity by Executive proclamation was opened this summer (1907) and fall grains seeded. An additional purchase was made of Galloway cattle and the station now has about 40 head of this breed. It is the intention to establish an animal-breeding station on Kodiak Island and ultimately to transfer the animals at Kenai and Wood Island to this place.

As a result of the cooperation between the stations and settlers some very important facts have been brought out regarding the possible extension of agriculture in Alaska. One of the greatest surprises was the receipt of samples of well-grown vegetables from a garden at Coldfoot, 60 miles north of the Arctic Circle. The vegetables consisted of potatoes, carrots, cabbage, turnips, rhubarb, and a large cucumber. Some of the specimens were sent to the Jamestown Exposition as a part of the Alaska Station exhibit.

The Hawaii Station during the past year has given particular attention to tobacco, rubber, rice, fruit shipment, honey studies, and insect and fungus enemies of economic plants. The possibility of producing cigar tobacco on a field scale was demonstrated, the station raising, curing, and fermenting about 30 bales of Sumatra, Cuban,

and other tobaccos of excellent quality. Rubber-tapping experiments were carried on, and systems of tapping, collecting, and coagulating the latex have been worked out that seem well adapted to use. More than $500,000 has recently been invested in rubber plantations in Hawaii and the outlook for this new industry seems very promising. In the experiments with rice new varieties have been introduced that are greatly superior to the mixed strain now being grown. Selections have also been made from the local variety that are more prolific and have better milling qualities than the ordinary crop. The superiority of using improved implements over the primitive Chinese methods of planting and harvesting has been shown, and more machinery will doubtless soon be used. By the fruit-shipping experiments it has been shown that with care in picking and packing the fruit and by proper fumigation with formaldehyde gas any of the important tropical fruits of Hawaii can be profitably marketed in the cities of the mainland west of the Rocky Mountains. The fumigation of pineapples at a trifling expense, while not affecting the fruit in any way whatever, reduced the loss due to black rot by one-third or more. Through the cooperation of the entomologist and chemist of the station studies were made of Hawaiian honey, which have led to a classification under the pure-food act that is of great advantage to the producers. The station's study of Hawaiian forage crops showed a great deficiency in lime, and to this fact is attributed many diseases of stock. By cooperative investigations with the Territorial veterinarian the feeding of bone meal was found to correct the deficiency of lime, and this practice is being adopted by the principal stockmen of the islands.

The Porto Rico Station has worked along the lines indicated in previous reports, and material progress has been made in the experiments under way. A number of crops that have been produced experimentally at the station are now being raised by planters and others, their economic status having been established through the station's experiments. In field work the production of White Burley and Zimmer Spanish tobacco of good quality has been demonstrated. The growing of sea island cotton has been shown possible, but under present conditions the extension of the area devoted to this crop is not liable to take place until the necessity of rotation of crops becomes better understood. Lowland rice cultivation has been tested with good results, and as rice is still the largest import of Porto Rico, its local production should be encouraged. In cooperation with the insular government the station secured 100,000 sisal plants, which are being sold to planters at cost. From specimens grown at the station, fiber of excellent quality has been extracted, showing that sisal can be profitably produced in Porto Rico. Forestry plantings are being investigated to discover methods for the reforestation of hills and unproductive lands, and the introduction of valuable forest trees after a temporary planting of less valuable ones has been established seems to offer possibilities of great importance.

The entomologist and pathologist has devoted most of his attention to working out means for the suppression of scale insects on citrus trees and to a study of the insect enemies of the tobacco and sugar cane. A parasite of the tobacco worm has been discovered and has been extensively propagated and distributed throughout the principal tobacco districts.

The horticulturist is devoting his attention to citrus fruit, mango, and pineapple propagation and shipment. The value of wind-breaks for citrus orchards has been demonstrated, and for temporary wind-breaks pigeon peas, bananas, and sugar cane are found excellently adapted. Mangoes and various leguminous trees are recommended for permanent plantings about citrus orchards. Tests of varieties of pineapples indicate that the Red Spanish is best suited to sandy soil and the Cabezona to heavy soils in Porto Rico. Following the successful experiments of the station in shipping Cabezona pineapples, large quantities of that variety are now exported.

The coffee experiments at the substation at La Carmelita are very encouraging. The trees under experiment are producing more heavily and are in much better condition, and the results of these experiments are being adopted throughout the coffee districts.

Efforts are being made to reach more of the planters by visits and demonstration experiments, and the outlook for the station is considered very bright, as calls for assistance are increasing and visitors in greater numbers are coming to the station from all parts of the island.

The income of each of the stations from the Federal Treasury during the fiscal year 1907 was $15,000. This was supplemented by sales funds, which by act of Congress are available for maintenance, as follows:

Alaska	$5,156.18
Hawaii	457.76
Porto Rico	4,121.03

In addition to the above amounts, the Hawaii Station was given a special appropriation of $5,000 for providing additional water service. The appropriations for each of the stations for the current fiscal year are $24,000, placing them on the same basis as the stations in the other States and Territories so far as Federal income is concerned. As the proceeds under the Hatch and Adams acts of the Congress will amount in 1909 to $26,000 to each station, I recommend a like sum for each of the insular stations to provide for their regular maintenance expenses.

As in past years, cooperative work has been carried on between the insular stations and various bureaus of this Department, and acknowledgment is made to each of them for their generous assistance. The Bureau of Plant Industry, in furnishing seeds and plants as well as expert advice and assistance, has aided materially in the investigations of each station. With the rapid extension of the work at the different stations the work of the Washington office has increased very greatly. This business, as hitherto, has been in charge of Dr. Walter H. Evans, as Chief of Insular Stations.

The following brief summaries of the preliminary reports of the special agents in charge of the insular stations will indicate the character and scope of their work during the past year:

ALASKA STATIONS.

As heretofore, the Alaska stations have been in charge of Prof. C. C. Georgeson. The outlines of work at the different stations as given in the previous report have been adhered to with very little modification.

From the data collected at the various stations, wide variation in climate and rainfall is apparent. The coast region, with its comparatively low summer temperature and heavy rainfall, is unsuited to grain growing, while the interior, with its warmer summers and lighter rainfall, seems better adapted to hardy cereals. Contrary to the common belief, much of the failure to grow grains in the interior is due to a deficient rainfall during the growing season. Cereals have ripened every year since 1900 at the Rampart Station, although by reason of severe frosts they have failed to mature the past two seasons at the Copper Center Station. Rampart is in the Yukon Valley near the Arctic Circle, while Copper Center is in the valley of the Copper River and fully 250 miles farther south. In 1905 the growth of cereals at Copper Center was retarded fully a month by the light rainfall in April and May, no precipitation occurring during April and only 0.48 inch in May. In 1906 a late spring with a heavy rainfall in July delayed the ripening of cereals. In spite of these adverse conditions, some of the varieties matured a portion of their crop, and advantage has been taken of this fact to carry on experiments for the development of hardier and earlier ripening varieties.

Nothing was done during the year 1906 toward opening the station in the Tanana Valley, but arrangements were perfected whereby operations at that place were inaugurated during 1907 with a view to determining the agricultural possibilities of that section.

The special appropriations for 1906 and 1907 have been expended in the purchase and transportation to Alaska of about 40 head of Galloway cattle. The first year's experience with these animals has shown their adaptability to their new surroundings, and the feasibility of raising cattle, especially of such hardy races, seems assured.

There have been some changes in the personnel of the station during the past year. Mr. J. W. Neal, who had been superintendent of the Copper Center Station since its establishment in 1902, resigned, and his place has been filled by the appointment of Mr. C. W. H. Heideman. Mr. P. H. Ross, superintendent of the station at Kenai, has also resigned, and the vacancy has been filled by placing Mr. J. W. Gray temporarily in charge of the work. Mr. M. D. Snodgrass, formerly an assistant in animal husbandry at the Kansas Experiment Station, has been secured as superintendent of the newly established live-stock station at Kodiak, and Mr. J. W. Gasser will assist in the preliminary work of opening the station near Fairbanks.

The office work of the central station is rapidly increasing in amount. The routine correspondence has become very large and arrangements will be made for a permanent clerk to assist with this and also to care for the station library, so as to permit the special agent to devote more of his time to experimental work.

Through the hearty cooperation of the Bureau of Plant Industry of this Department, garden and flower seeds were distributed last year to about 2,500 addresses in various parts of Alaska, and this feature of the station work has been continued the present year. In many localities this is the only source from which seed is obtained, and as reports are asked as to the results of planting, much valuable data are obtained regarding the extent to which gardening can be profitably carried on by the settlers.

The special agent continues to act as a representative of the Weather Bureau in establishing volunteer observing stations and in collecting and compiling the data returned.

SITKA STATION.—The principal investigations have been along horticultural lines. The station has distributed more than 12,000 fruit trees and fruit bushes to settlers in different parts of the Territory. The object of this distribution is to give a wide trial to these fruits and to learn as quickly as possible how far fruit growing in Alaska can be successfully prosecuted. The distribution consisted of early maturing varieties of apples, crab apples, plums, cherries, currants, raspberries, gooseberries, strawberries, and a few ornamental perennial plants. All of these have been tested for several years at the Sitka Station, and many have fruited.

The work in plant breeding has been continued. There are now at the station about 3,000 hybrid strawberry seedlings, the result of crossing some of the cultivated varieties with the native species. The object of this work is to obtain varieties having the size and productiveness of the cultivated sorts and the hardiness and flavor of the native ones. In a similar way crosses have been made between the cultivated raspberry and the native salmon berry, and something like 500 seedling plants are now under observation. Seedlings from wild and cultivated currants and gooseberries are also being grown with a view to obtaining more hardy fruits through selection. Advantage has been taken of the presence in southeastern Alaska of a native species of crab apple, and this is being successfully used as stock upon which are grafted a number of the more promising varieties of apples. Some varieties, like Duchess and Okabena, have made good growth when grafted upon the wild stock.

It has already been demonstrated that many varieties of hardy vegetables can be grown throughout the Territory, and the work at the Sitka Station now consists of comparative tests of a few of the leading varieties of potatoes, cabbages, peas, etc. Some varieties of potatoes were grown on an extensive scale and their adaptability is fully established. The variety Freeman, a potato of medium size and excellent quality, yielded last year 379 bushels per acre, 60 per cent of which were first class in size, ripeness, and quality. Further experiments have shown that Broad Windsor beans can be successfully grown in Alaska, and the special agent recommends all settlers to grow a few rows of this vegetable in their gardens.

KENAI STATION.—The work at this station has been wholly given over to cattle raising and dairying, with enough farming to provide winter forage for the cattle. There are now one dozen head of pure-bred Galloway cattle and a number of common cows at this station that are fed wholly on forage produced on the station grounds. During the summer they keep in excellent condition by grazing in natural meadows, and for the rest of the year they are fed almost exclusively on grain-hay raised on the station grounds. In providing this forage the superintendent worked out a system of hay-making that is well adapted to the moist coast region of Alaska. This method has been fully described in Bulletin No. 3 of the Alaska Experiment Stations.

The dairy investigations have been continued and a quantity of butter and cheese has been made that more than supplies the local demand.

Copper Center Station.—The work at this station was begun in 1902, and it has been gradually extended until there are now about 40 acres under cultivation and 80 acres additional fenced for pasture. A log house, barn, tool shed, root cellar, and shop have been constructed. Nearly all of this was done by the former superintendent, Mr. J. W. Neal, assisted by whatever help he could obtain. As has been previously stated, this station is devoted chiefly to experiments in growing grain. Of the four crops produced at this station, only one fully matured, and the others were more or less injured by killing frosts before the grain had matured. Small quantities of different cereals have ripened every year, and these have been saved for selection breeding experiments. Last year a very dry spring was followed by early frosts, and little of the grain was matured at the time when a killing frost came, August 24. The standing grain injured by the frost was cut and made into hay, about 22 tons of which was sold at an average price of $200 per ton. The present season has been an unusually favorable one, and all spring seeding was finished by May 6. If the rainfall is sufficient probably good results will be obtained. It is becoming evident that the rainfall of the Copper River Valley is ordinarily not sufficient for growing good crops. The annual precipitation, as shown by the records kept at the station, is only about 10 inches, and its distribution throughout the year is very irregular. There is, however, an abundance of water in the rivers and creeks, and it is hoped that some experiments in irrigation can be begun that will demonstrate the possibility of supplementing the deficient rainfall. With a supply of water sufficient to keep the crops growing early in the summer it is quite probable that more varieties will mature before the coming of frosts.

Rampart Station.—This station since 1904 has been in charge of Mr. F. E. Rader. A small building was erected last year, and considerable progress is reported in preparing land for cropping. This station is situated about one degree of latitude from the Arctic Circle, yet there has not been a failure to mature cereals on account of killing frost. Winter rye and wheat and spring-sown barley and oats have matured their crops. A beginning has been made in the development of earlier-ripening varieties by the selection of the earliest-ripening heads of each variety. These are saved for seed purposes, and the selection will be continued until a desired type is secured. Vegetables of nearly all kinds did well in the Yukon Valley the past season.

Fairbanks Station.—No actual work has been begun at this point, but an equipment of tools and implements has been forwarded to this place and some work in clearing land and seeding fall grains will be begun this fall. The details of the work at this station have not been fully decided upon. The station is located not far from the center of the Tanana Valley, and it is estimated that this valley contains not less than 15,000 square miles of agricultural lands. There is a large population in this valley on account of the extensive placer mines along the various creeks tributary to the Tanana, and it is believed to be of great importance that agricultural experiments should be prosecuted with vigor for the benefit of the present and future settlers.

LIVE STOCK STATION AT KODIAK.—In making appropriations for the Alaska Experiment Stations in 1906 and 1907 the Congress granted $3,000 each year for the purchase and introduction of live stock for experimental purposes. The funds thus appropriated have been expended in the purchase and shipping to Alaska of about 40 head of Galloway cattle. It is deemed very important for the future of the agricultural interests of Alaska that a hardy breed of cattle should be introduced and bred in the Territory. The Galloway cattle were chosen as best suited to the conditions, as it is a hardy race. The individuals have a heavy coat of hair, they have no horns, a decided advantage in handling, and they are good rustlers. In selecting the cattle preference was given to those cows having the best milk records, and it is hoped that it will be possible to develop from them a dual-purpose animal.

In 1906 about a dozen head were purchased, most of which were sent to the Kenai Station, although a few were placed temporarily on Wood Island, near Kodiak. In the spring of 1907, 20 more were purchased and sent to Kodiak, where it is intended to establish a breeding station upon the tract reserved by Executive proclamation on March 28, 1898. As yet no buildings have been erected, nor have much-needed fences been constructed. It is expected that these will soon be provided, after which the cattle from Kenai and Wood Island will be brought to Kodiak. The inaccessibility of Kenai makes it very difficult to reach, and with the construction of the railroad from Seward across the upper end of the Kenai Peninsula it will be even more isolated than now. So far as the conditions for cattle raising are concerned, there is little difference between Kenai and Kodiak, but the accessibility of the latter place, it is believed, will warrant the consolidation of this work at one place. The change probably can not be effected for a year or two, but for increased efficiency in management, as well as in the interests of economy, it is believed to be advisable. A special appropriation for fences and buildings at the breeding station is greatly needed.

As soon as funds are available it is proposed to add one or two hardy breeds of sheep to the live stock at this station, and ultimately to introduce the Shetland and Iceland ponies, as it is believed that this would be an ideal place for their breeding.

HAWAII STATION.

The Hawaii Station has remained in charge of Mr. Jared G. Smith. The routine, office, library, and laboratory work of this station has been continued along about the same lines as previously described. The building operations have been confined to repairs to the residence, the enlargement of the main barn, and the construction of a stable.

The Congress having provided $5,000 for the installation of a water system, the plans previously approved by the Secretary of Agriculture have been carried out. A corrugated galvanized-iron roof about 200 feet square has been constructed upon the upper portion of the station grounds, at an elevation of about 1,200 feet. The roofing conforms to the slope of the hillside, and the lower edge is connected by means of gutters with a 30,000-gallon red-

wood tank. A 1-inch galvanized-iron pipe leads the water from this tank down the ridge into a 60,000-gallon tank located at an elevation of about 475 feet. Direct connections will be made from this tank to the different residences at the station. Another 60,000-gallon tank has been placed on the upper corner of the lower experimental fields, at an elevation of about 250 feet. A little more than a mile of piping has been laid to conduct the water from this lower tank to the various experimental fields. With an average rainfall amounting to 120 inches per annum on the upper portion of the station, this system will yield more than 1,000,000 gallons of water, and there is now a storage capacity of 210,000 gallons. This guarantees fire protection to the station residences and office buildings and insures a water supply to the experimental plats during the hottest and driest months of the summer, a period during which there has been in previous years a shortage in the city water supply.

The distribution of Bluefields bananas begun in May, 1906, was continued during July and August, and more than 1,000 suckers of this fine type of banana have been distributed by the station throughout the Territory.

A considerable supply of cacao seedlings and some inarched mangoes were received from the Bureau of Plant Industry of this Department, and a portion of them were planted on the station grounds, while the balance were placed at Hilo, where previous plantings of cacao had been made.

By cooperative agreement between the Office of Experiment Stations and the Bureau of Plant Industry, Dr. N. A. Cobb, who was previously pathologist of the Hawaiian Sugar Planters' Station, made a study of fungus diseases of crops other than cane in Hawaii, and a report upon this subject will be issued as a bulletin of the station.

The special agent has visited a number of different portions of the islands securing data in reference to the development of the rubber industry, the growing of grapes, sisal production, etc.

Considerable work has been done by the station for other branches of both the Federal and the Territorial governments, including cement analyses for the United States Army Engineer Corps and a number of analyses and examinations of imported goods for the collector of customs, and it has also cooperated with the United States Navy Department in sending collections of seeds and plants to the naval stations in Guam, Tutuila, and the Philippines.

A number of changes have occurred in the office staff during the year. Mr. F. G. Krauss has been appointed agricultural expert in charge of the rice investigations, and Miss Alice R. Thompson as assistant chemist to the station. The former chemist, Dr. E. C. Shorey, was transferred to the Bureau of Soils of this Department in December, 1906.

Additional appropriations are greatly needed to provide for an increase in the laboratory and office space as well as for the construction of a greenhouse. The office and laboratory building contains only about 2,000 square feet of space, and this is utilized for an office, chemical laboratory, library, and a small office for the horticulturist. The entomologist and the other members of the staff are

occupying very meager quarters in buildings of a temporary nature. In order to properly carry on the plant-breeding work of the station a greenhouse where the conditions can be absolutely controlled has become a necessity. Where the manipulations of pollination and propagation are to be successfully carried on the open air does not offer conditions of control such as are required.

Besides the regular appropriation provided by the Congress, the station during the fiscal year 1907 received from private individuals, the Territorial government, and corporations $13,518 for carrying on specific investigations. This sum was largely used to assist in the rice, tobacco, and rubber experiments. In addition contributions were made to assist the entomologist in making a study of honey and of insects affecting stock.

During the past year three press bulletins were issued—No. 17, on the Mango Weevil; No. 18, All About the Hawaii Experiment Station, and, No. 19, A Preliminary Report on the Rice Investigations.

The only project completed in chemistry during the year was that of honey analysis. This work has been carried on by the station chemist in cooperation with the entomologist, and analyses have been made of 49 samples of honey of known derivation. Considerable routine work, including analyses of soils, water, rubber, and feeding stuffs, was done. Early in the year connections were effected with the mains of the newly organized gas company, so that the station is now able to discontinue the use of the cumbersome and expensive gas machine upon which it previously depended for its laboratory supply.

The station received the benefit of about $4,000 from private contributions for continuing tobacco investigations, concerning which a number of reports have been issued. In January, 1906, a tract of land on the island of Hawaii was placed at the disposition of the station by the acting governor, reserving it for station use for a period of three years. Field work was begun in February, a part of the land cleared of abandoned coffee, and 2 or 3 acres prepared for immediate planting. The work was begun so late in the year that only about 3½ acres was planted. A curing barn capable of handling 5 acres of tobacco was completed, but with all the haste exercised a portion of the crop was lost by being overripe. The results obtained were better than in any previous season. The entire crop was cured and fermented in the new tobacco barn, and although a portion was lost from overripeness a crop of 3,000 pounds of cured tobacco was secured from 3½ acres of land. Some six or seven bales of this has been distributed in small amounts to tobacco dealers in the United States and Europe, and the station has now on hand 23 bales of finished tobacco. The best tobacco grown this year was of the Sumatra type, although the Cuban grades were of excellent quality. The reports in regard to the quality of the station tobacco are almost uniformly favorable, buyers being enthusiastic in regard to the color, texture, and burn of the leaf. As the legislature at its last session did not provide for continuing this experiment, the special agent feels obliged to discontinue demonstration experiments with this crop. It is believed that the station has definitely established the fact that cigar-leaf tobacco can be profitably produced on a commercial scale in favorable districts in Hawaii.

The entomologist in August, 1906, completed his work on the distribution of "top minnows" as a means of controlling mosquitoes. He personally distributed a number of these mosquito-larvæ-eating fish on the windward side of Oahu, in the vicinity of Hilo, and at several points on the island of Kauai. This distribution having been made, the investigation by the station has been discontinued.

In September, 1906, an investigation was made of a serious outbreak of pineapple insects upon the island of Kauai. The cause of serious losses among fields of newly set pines was found to be the pineapple scale and the pineapple mealy bug. Experiments were made in dipping and fumigating suckers, and it was found that the hydrocyanic-gas method was cheap, easy of application, and entirely efficient.

The principal line of work of the entomologist during the past year has been the problems connected with the honey industry in Hawaii. Hawaiian honeys are largely of a type different from those produced on the mainland. The annual production amounts to about 600 tons, one-fourth of which is designated as honey-dew honey, the source of which is not floral nectar, but is derived from the secretions of insects attacking sugar cane and other sugar-producing plants. About 250 tons is a mixture of honey-dew honey and floral honey and constitutes a type little known upon the mainland. The honey-dew honey and mixed honeys are largely sold to the baking trade, and while in former years the prices ranged from 2 to 3 cents a pound, through the efforts of the entomologist large consignments have been sold to the wholesale baking trade at prices ranging from 4 to 6 cents per pound. In April, 1907, the entomologist visited Washington to discuss with the Chief of the Bureau of Chemistry the question of the conformity of Hawaiian honeys to the standards established under the pure-food act of the Congress. The analyses of the Hawaiian honeys made by the chemist of the station had plainly indicated that while these honeys are not artificially adulterated, there is a wide divergence in their analyses from those previously established as standards for honey. As a result of his visit it was agreed that the honeys when conforming to the standard are salable as pure honey, and the pure honey-dew honey should be marketed as "honey-dew honey." In connection with the honey work, an investigation has been begun on the feasibility of feeding back inferior grades of pure and mixed honey for the production of wax. Wax of good quality sells for 35 to 40 cents a pound, while honey-dew honey sells for 2½ to 4½ cents per pound.

Miscellaneous investigations have been begun on the insects affecting live stock, household pests, insects affecting stored products, etc. As the rubber industry is attracting considerable attention, the entomologist has visited a number of rubber plantations and has begun studies on the life history of some of the injurious insects with a view to their control.

The principal investigations of the horticulturist have been along the line of fruit shipment. Early in 1906 he accompanied a large shipment of fruit to the Pacific coast, the object being to determine the best methods of packing, handling, and marketing tropical fruits. About 4 tons of pineapples, avocados, papayas, and bananas were shipped to San Francisco, from which point they were transshipped

to various cities along the coast. Selected packages were also forwarded to commercial bodies of each of the mountain States as far east as Colorado. The experiment demonstrated the possibility of the shipment of avocados and mangoes in cold storage to any point that can be reached directly by shipment from Honolulu, Hilo, or other island ports. Many interesting facts were determined in regard to the methods of handling, packing, and the use of different styles of crates. One of the most striking features of the experiment was the demonstration of the value of fumigation with formaldehyde gas to control losses caused by the pineapple rot (*Thielaviopsis ethaceticus*). When this fungus attacks the pineapple it is chiefly evident during the ripening of the fruit, and it has been demonstrated that the infection occurs at the base of the fruit either through wounds caused by mealy bugs or where the fruit has become bruised or injured. Preliminary experiments were made in dipping and fumigating fruits with formaldehyde, and it was demonstrated that a favorable method of fumigation is that proposed by the Maine State board of health, which consists of the use of permanganate of potash and commercial formalin. Other points determined were the value of glazed paper as a packing material for fruit and the value of wrapping the fruit as compared with packing it in hay or straw. A detailed account of these experiments has been issued as Bulletin 14 of the station.

The permanent orchards of the station were largely increased during 1907. The avocado and mango orchards now occupy 1½ acres, in which are planted budded, grafted, and inarched stock of many of the best varieties. About 2 acres of land has been cleared on the upper portion of the station grounds and planted with the best California varieties of citrus fruits, figs, loquats, and grapes. About one-third of an acre has been planted with papayas for experiments in crossing and breeding, and a large number of citrus seedlings have been set with a view to making a collection of the best island types. On the lower part of the station grounds 4 acres have been planted to mulberries, citrus fruits, five species of rubber, and a miscellaneous collection of tropical fruits.

The horticulturist visited a large ranch on the island of Hawaii and supervised the setting out of two deciduous orchards, consisting of apples, pears, plums, peaches, apricots, cherries, walnuts, almonds, and figs. One of these orchards is located at an elevation of 3,000 feet and the other at 5,000 feet, and it is believed that this cooperative experiment will prove of great value in subsequent years.

During the summer of 1906 attention was called to the existence of two small groves of rubber trees on the island of Kauai, each containing about 100 individual trees. One of these groves was planted in 1893, and from seed produced in this grove the second was planted in 1899. The trees were of the Ceara variety, which is being extensively planted in Hawaii. It was suggested by some of the planters that the station undertake some tapping experiments, and the preliminary work was done on a few isolated trees on the station grounds in Honolulu. In April experiments were begun on the 7-year-old grove, the trees of which varied greatly in size, being from 6 to 30 inches in circumference 3 feet from the ground. A number of systems of tapping were investigated, and the half

herring-bone system, with one vertical cut and laterals a foot apart, proved best. Two experiments were outlined, one to tap the trees every day and the other on alternate days.

As the latex from this species coagulates almost at once when the channels are made, a method of trickling water down over the cut surfaces was adopted, and it was soon found that the addition of ammonia retarded coagulation and caused the flow to continue until the feeding area was practically exhausted. The mixed water and latex was collected at the foot of the tree. Tappings were begun at 5 o'clock in the morning, and two trees, averaging 28 inches in circumference, were tapped for nine consecutive days with the full herring-bone system from the ground to 5 feet, yielding 8 ounces of dry rubber in nine days. Two other trees tapped on alternate days for a period of two weeks yielded 4 ounces of dry rubber in that time. In the other grove, where the trees were 13 years old, two trees, 34 inches in circumference, tapped every day for nine days, yielded 12¼ ounces of dry rubber. As these trees were almost bare of leaves and the resting period about ended, it was not considered advisable to tap on alternate days. A number of 4-year-old trees, 19 inches in circumference, that were entirely bare were tapped every day for nine days and yielded only one-half ounce of dry rubber.

These preliminary experiments have been very suggestive, and many points have arisen that the station will endeavor to work out during the coming year. All the tappings were made while the trees were just entering the period of rest or during the time when they were bare of leaves; and from the results obtained it appears that daily tappings rather than at longer intervals will give the best results. Trees tapped in the forenoon, at midday, or in the afternoon, yielded almost no latex, but at about sundown there was apparently an increase in tension and the latex flowed more freely. Experiments were conducted in coagulating latex, but it is too soon to announce definite results. So far the best qualities of rubber have been produced where the latex was neutralized with ammonia and coagulated by adding a concentrated solution of ammonium sulphate to which a small amount of formalin had been added.

The investigations of the problems of the rice industry begun in July, 1906, have been continued, a considerable portion of the funds to meet the expense of which was contributed by certain estates interested in rice production. Through the cooperation of the Bureau of Plant Industry of this Department and through the bureau of agriculture of the Philippines, about 130 different varieties of rice were obtained and in addition the best strains of Hawaiian rice were used for the experiments. The results of the variety tests have shown that one variety, which was originally obtained by Dr. S. A. Knapp in Egypt, has proved to be better than any rice grown in the islands. This variety has a large flinty grain, is very productive, and is a type demanded by the largest consuming trade in the islands. In milling qualities it is much superior to any variety that has ever been produced in Hawaii. In addition to this Egyptian type three other strains have shown marked superiority over the ordinary Hawaiian-grown rices. These are, in order of merit, a Philippine variety, a strain of Gold Seed received from Georgia, and a Japanese variety secured directly from Japan by Mr. C. K. Ai. The Japanese variety produces a crop in three-fourths the time required for the maturity

of the Hawaiian variety. This type of rice is largely consumed by the Japanese laborers and yields heavily and mills well. By the adoption of this variety two crops can be grown each year, with a considerable rest between the crops that will permit of the drainage of the fields and their better tillage and preparation.

A number of selections have been made of individual plants of Hawaiian rice, and an increase of 25 per cent in the yield of paddy has already been produced by two selections from individual plants. The ordinary Hawaiian rice, while largely of the Gold Seed type, is really a mixture of many types, so that it is impossible to get the best results in harvesting or milling on account of the lack of uniformity in plant maturity and size of grains.

Three varieties of dry-land rice have been selected from the original variety collection, and it has been determined that these rices produce a better crop without irrigation than with it. One of the principal values of the dry-land rice is its production of forage, and the present outlook is that dry-land rices will fill a very important need in Hawaii in the production of grain hay and forage.

Fertilizer experiments have shown that an increase of 15 to 20 per cent of grain per acre can be secured by the use of proper commercial fertilizers. The results of this aspect of the work will be shortly published in bulletins of the station.

In connection with the rice experiments tests were made of a number of types of machinery not hitherto used by rice growers in Hawaii. These included disk tillage implements and twine binders, and it was found that 4½ acres of land could be plowed in a day with a 5-foot cut-away bog plow with four horses, as against from 1 to 1½ acres with two water buffalo or three or four horses with an ordinary 10-inch plow. The main disadvantage at present of the type of bog plow tested is that it does not turn the ground deep enough, and it is thought that if the manufacturers will evolve a type of plow that will turn the ground from 6 to 8 inches in depth it will be immediately adopted by the Chinese rice growers.

Trials were made with a 5-foot twine harvester, and the results were so successful that it is believed if a lighter type of machine could be secured its adoption would be assured. The results of the preliminary harvesting test indicated that with the comparatively heavy machine used a good team of two heavy draft horses or three or four medium horses and three men could do the work now requiring 25 to 40 men. The expert in charge of the rice investigations is in correspondence with a number of manufacturers in the United States to determine whether suitable machines and implements can not be produced.

PORTO RICO STATION.

The work at the Porto Rico Station during the past season has continued to be in charge of Mr. D. W. May. The improvement of the station farm and buildings has continued as means would allow. In December, 1906, Mr. H. C. Henricksen, who for several years had been horticulturist of the station, resigned, and he has been succeeded by Mr. M. J. Iorns, a student in horticulture at Cornell University. No other changes in the staff have taken place.

The station has given assistance to planters in importing live stock and has also distributed by sale a number of pigs, chickens,

ducks, geese, and turkeys, as well as eggs of the different classes of poultry.

Although the station is not in what is recognized as the tobacco district of the island, experiments have been carried on with some of the coarser types, and the White Burley and Zimmer Spanish have been found to succeed very well. Studies have been made of the insects affecting the tobacco plant and means for combating them. The station entomologist discovered a parasite of the tobacco hornworm, which he has propagated and distributed among the tobacco plantations of the island. Different members of the station staff have visited the more important tobacco sections for the purpose of advising planters regarding the growing and handling of the crop.

The coffee substation at La Carmelita is showing the beneficial results of better methods of planting and cultivation. This is evidenced not only in the increased yield of the trees, but in their more thrifty condition. That the work of the coffee substation is appreciated by the planters is shown throughout that section of the island, where seed beds are now planted and improved methods of culture are seen on every hand. Varieties of coffee introduced by the station have fruited sparingly, and during the coming season a number of Java and other coffees are expected to produce a crop sufficient to give an idea as to their value and flavor when grown under Porto Rican conditions. A number of other varieties of coffee have been received, among them a collection that was furnished to the station from the French Colonial Gardens at Nogent-sur-Marne.

The first crop from the experiments with sugar cane has been harvested. These experiments included trials in distance of planting and methods of cultivation and fertilization of the cane. About 30 varieties of seedlings and other canes are under observation, and small quantities of a number of the more promising ones have been distributed to various sections of the island. A number of leguminous plants are under experiment as green manures for cane. These are planted to follow the cane crop in rotation and also among the rows of cane, with a view to improving conditions where cane is grown continuously on the same soil. The areas devoted to cane planting in Porto Rico are being extended, but the crop during the past season was materially curtailed by the long drought that prevailed throughout the West Indies.

Rice continues to be by far the greatest import of the island of Porto Rico. The growing of upland rice is increasing to a small extent, and lowland rice cultivation is as yet a thing of the future. Many soils now devoted to cane could be very profitably given over to rice production, especially where irrigation plants have been installed. In the growing of rice the experiment station has tested a number of varieties of lowland rice, with good results.

From funds appropriated by the insular government the station has imported about 100,000 suckers of sisal plants, which are being sold to the planters at cost. This plant furnishes the most promising cordage of all those tested. From specimens grown by the experiment station a very fine quality of fiber has been extracted. Many soils in the island are adapted to the growth of sisal, and planters are taking great interest in it.

A number of factories have been established in towns in the western end of the island for the manufacture of Panama hats. The raw fiber is imported, and after weaving the finished product is shipped to the States. The station, through the American consul at Guayaquil, Ecuador, has secured a number of these palm-like plants, and it is hoped in a short time that it will be able to distribute them among weavers, in order that the raw material may be produced at home.

Forestry plantings are being continued at the station with a view to determining the best methods of utilizing the bare hills now in many sections of Porto Rico where coffee was once grown and on lands that have become nonproductive. It has been found necessary to change the methods of afforesting. In the forest plat at the station the economic trees, with one exception, failed to make a satisfactory growth. At present plantations are being started with trees, especially leguminous ones, that will grow under adverse conditions. After the ground has been sufficiently covered, trees of greater economic value will be set out. This method appears to offer promising results.

The fruit industry of Porto Rico has had quite an impetus during the past year. Early shipments of oranges and pineapples to the New York market proved very successful, and this has induced extended plantings, especially of pineapples. Fruit lands have increased greatly in value and planters are feeling very jubilant over the outlook. The demand on the station for information and demonstration of methods of handling these fruits has been very great, and a considerable amount of time has been spent by members of the station staff among the fruit growers.

Among pineapples the Cabezona and the Red Spanish are the only ones that the station feels warranted in recommending for commercial plantings. Others are promising, but have not yet given entirely satisfactory results. The Red Spanish variety seems best adapted to sandy soils, while the Cabezona thrives on the heavier lands on the western coast. Two new canneries were established in the island during the past year and they are using a great amount of fruit that is not suitable for shipment. The station's experiments in shipping the Cabezona pine, which has not hitherto been considered a good keeping fruit, have been so successful that where accessible to shipping points this variety is now being exported in large quantities.

One fact that has been demonstrated in the culture of citrus fruits is the importance of wind-breaks, and during the past year there have been trials of different plants for this object. The presence of wind-breaks has made quite a difference in the condition of some plantations and they are now considered indispensable. The plants that have been tried for wind-breaks are gandules (pigeon peas), sugar cane, and bananas. For permanent wind-breaks the station recommends the planting of leguminous trees, or where trees of economic value are wanted the planting of mangoes is advised. A number of fertilizer experiments in citrus orchards are being carried on in cooperation with planters in different parts of the island. In these the station superintends the application of the fertilizers and takes notes on the results.

The special agent is very much impressed with the importance of the Indian mango as a fruit for Porto Rico, and the station has about 50 trees and is propagating others as rapidly as possible. It is hoped

during the coming year to distribute a few trees here and there so that fruit growers may inarch their own trees. This method of propagation is very slow, as it takes several months for a union to be formed where the trees are inarched.

Many of the cacao trees planted at the station have begun to bear fruit, but a great drawback to the industry is a fungus disease of the pods that causes them to dry up on the tree. Until investigations show some method of combating this trouble, the commercial planting of this tree can not be advised.

A number of other fruits are under trial, some of which have proved successful experimentally, but further work will be necessary before the planting of such fruits as grapes, peaches, etc., can be recommended.

During the past year the time of the entomologist has been largely taken up with methods for the eradication of scale insects on citrus trees and the destruction of insects of tobacco and sugar cane. A large number of insects have been added to the collection of the station and the life history of many of them is being studied.

During the ensuing year a chemical laboratory will be installed and some work taken up that heretofore has been impossible. The station is very greatly in need of a building for offices and laboratories. The old building, which was formerly a sugar mill, is wholly inadequate and is very poorly adapted to the work of the experiment station, and it should be replaced by better accommodations.

The outlook of the station is very bright and planters are learning to appreciate more and more the efforts that are being made for their betterment. The calls for assistance are greater and the number of visitors to the station from distant sections of the island is increasing rapidly.

NUTRITION INVESTIGATIONS.

Investigations on the nutrition of man, by which is meant, broadly speaking, studies of the utilization as food of agricultural products of animal and vegetable origin, have been carried on by this Office during the fiscal year 1906–7 in continuation of earlier work and the same general policies have been followed as heretofore.

Since investigations of this nature were first instituted the Department has been associated in the work with agricultural experiment stations, agricultural colleges, universities, and other educational institutions as well as philanthropic associations, public institutions, and similar organizations in nineteen States and three Territories. The Department funds have been materially supplemented in various ways by such cooperation and the scope and possibilities of the work have been largely increased. The last twenty years has witnessed the growth of a widespread interest in the various problems connected with the food and nutrition of man which has been indicated by the large amount of work, some of it very practical and some highly technical, undertaken along these lines in various institutions throughout the country; by the widespread use in courses in home economics and kindred subjects given in schools and colleges of the material which has been accumulated; by the attention which has been paid in public and philanthropic institutions to the intelligent management of their dietary problems, by the proper demand for reliable data regarding the comparative value of different foods and food combinations, and by the growing demand of housewives

in country and town for reliable information regarding the economical and rational selection and use of food products to secure an adequate and satisfactory diet. It is unquestionably true that this widespread interest in the nutrition of man is in very large measure attributable to the systematic efforts of the Department and that the cooperative nutrition investigations have contributed a very large share to the total fund of information now available.

It has been the policy in conducting this nutrition enterprise to select for study such problems as seemed of most widespread interest, and especially questions which have a direct bearing upon agriculture. New experiments have been undertaken whenever the completion of any line of work has rendered this possible and the work as a whole has been systematized and grouped as a series of projects, as is the case with all the work carried on by the Department.

Object and Nature of the Investigations.

As regards their origin, all foods, both animal and vegetable, are agricultural products. In the past the farmer was very commonly the distributer of his products, and meats, vegetables, butter, eggs, fruits, and other food passed directly from the farmer to the consumer. At the present day this is much less common and almost all foodstuffs become articles of commerce before they reach the housewife, and, in many cases, they may be properly classed as manufactured products since they must pass through the mill, the dairy, the packing house, or other manufacturing institution before they are ready for the table. Briefly stated, the object of the cooperative nutrition investigations has been to obtain data which would insure the better utilization of these varied food products; for the most intelligent use of cereals and cereal products, meat, and other foods necessitates a knowledge of the nutritive value of these materials and ways of handling, preparing, and combining them to form a well-balanced diet.

Man is dependent upon his food for the building and repair of his body, and for the energy which he needs to maintain his vital processes and which he expends in the varied forms of muscular activity. Furthermore, his comfort and well-being depend in a very large measure upon the character of his food and the way in which it is prepared. When it is also remembered that over half the total earnings of the average man are expended for food, the need for reliable information is obvious. It is the purpose of the nutrition investigations to obtain data which will furnish information regarding the right use of food and which will insure for both producer and consumer the best utilization of the very varied agricultural products of animal and vegetable origin which are grouped under the term "food."

Many of the questions which arise in connection with this investigation have already been answered, others are being studied, and many remain for future investigation. As examples of the completed studies carried on under the auspices of the Department may be cited the investigations which have shown the relative value of different kinds of wheat flour, the high nutritive value of all such food, and the value of cereal breakfast foods and similar goods as compared with flour; the relative digestibility and nutritive value of corn bread

of different sorts as compared with wheat-flour bread and other staple foods, and the losses sustained by many common food materials when prepared for the table and cooked in a variety of ways. Studies of the nutritive value of meat cooked in different ways and the determining of the factors which influence flavor and quality of cooked meat may also be mentioned, as well as the demonstration of the importance of fruit and nuts as sources of nutritive material when intelligently used; the high nutritive value of beans, peas, and other dried legumes, including especially cowpeas; the determination of the amount of iron required in the diet and ways in which it may be economically supplied by the use of food materials rich in this constituent, and the proof that cheese is thoroughly digestible and a food material which may be used in large quantities in the diet as an inexpensive source of both protein and energy. Experimental methods have been elaborated, the bomb calorimeter has been perfected, and the respiration calorimeter has been devised. The latter is an instrument of precision which affords the most satisfactory means yet devised for studying the many complex questions which are connected with the general laws of nutrition, as well as practical questions which have to do with the way the body utilizes its food supply; the relative value of different food materials; the amount of energy expended in different kinds of muscular work, and the relative value of different foods and food combinations for supplying such body needs.

The following may be cited as examples of problems now under investigation: The food value of flour prepared in other forms than bread, and the nutritive value of foods containing flour and a number of other ingredients as compared with equivalent amounts of similar foods eaten separately; the comparative value of preserved and dried fruits and manufactured fruit and nut products; the relative digestibility and nutritive value of corn meal ground in different ways and prepared in other forms than bread; the digestibility and nutritive value of cheese of different kinds and the effect of age and methods of storing upon its digestibility; and the body requirements with respect to the more important mineral constituents and the ways in which they may be economically supplied by different food materials.

Among the problems which remain for future study may be mentioned the value and relative importance of root crops and green vegetables; the comparative value of cream, butter, olive oil, lard, and other common food fats; the relation of methods of rearing and fattening farm animals of different breeds and classes to table quality and the food value of meat; studies of household methods of handling and storing food; the effect of different household methods of cooking, canning, and preserving upon quality and nutritive value; and studies of ways in which foods may be used to secure the greatest efficiency of the body for work of all kinds and for the maintenance of health and vigor.

Nutrition problems like those mentioned depend for their solution in large part upon dietary studies undertaken to show the relative amounts of dairy products, vegetables, cereals, meats, etc., consumed by persons living under a variety of conditions and engaged in different occupations; upon digestion experiments which show how thoroughly the body utilizes different foods; upon special studies of

the changes brought about in foods by cooking and the effects of heat and other methods of preparation upon nutritive value and digestibility, and upon experiments on the metabolism of one or more food elements, as well as investigations with the respiration calorimeter.

WORK AT THE WASHINGTON OFFICE.

The nutrition division of this Office has had general supervision of the plans and expenditures for the cooperative investigations and has performed special duties in connection with the enterprise. Dr. C. F. Langworthy, as chief of nutrition investigations, has had charge of the work. At the request of Members of Congress and of different branches of the General Government, data regarding various questions of food and nutrition have been collected. Students and teachers, physicians, heads of public institutions, and home makers on farms and in towns make large demands for information on various questions concerned with the relative value of different foods and, so far as possible, information has been supplied by distributing publications and by correspondence.

Attention has been paid, as heretofore, to the collection of bibliographical and other data relating to food, and to editing reports of nutrition investigations; to the preparation of abstracts of current literature of the subject for the Experiment Station Record; and to the preparation of popular summaries of nutrition work, particularly that carried on at the experiment stations, for publication in the series of bulletins entitled "Experiment Station Work."

Requests are frequently received from schools, learned societies, etc., for lectures or for informal discussions on different topics connected with the general subject of nutrition, and these requests have been complied with in so far as possible.

As a part of the work of the nutrition division of the Office, 4 Farmers' Bulletins have been prepared for publication, as well as a number of reports and summaries. Five technical bulletins have been edited for publication and a large amount of work of similar nature has been done on a number of others. Under the immediate supervision of the Office, investigations have been conducted by Miss Charlotte Bragg, professor of chemistry at Wellesley College, on household methods of canning vegetables; and by Mrs. Alice P. Norton, of the School of Education of the University of Chicago, on effects of different methods of cooking fruit, with special reference to preserving and jelly making. Miss Emma Smedley, of Drexel Institute, Philadelphia, has carried on dietary studies in public institutions in that city. Special attention has also been paid to collecting data on the pedagogics of nutrition and to systematizing available information in such form that it will be readily accessible for the use of teachers in agricultural colleges and other institutions.

COOPERATING INSTITUTIONS AND INVESTIGATORS.

The institutions at which the investigations have been conducted during the fiscal year and the investigators were as follows:

California.—University of California and California Agricultural Experiment Station, Prof. M. E. Jaffa and associates.

Connecticut.—Wesleyan University, Prof. F. G. Benedict and associates.

Hawaiian Islands.—Hawaii Agricultural Experiment Station.

Illinois.—University of Illinois, Prof. H. S. Grindley and associates; University of Chicago, Mrs. A. P. Norton.

Maine.—University of Maine and Maine Agricultural Experiment Station, Director C. D. Woods and associates.

Maryland.—Baltimore board of charities and charitable institutions, Dr. C. F. Langworthy and H. L. Knight.

Massachusetts.—Wellesley College, Prof. Charlotte Bragg.

Minnesota.—University of Minnesota and Minnesota Agricultural Experiment Station, Prof. Harry Snyder and associates.

Missouri.—University of Missouri, Prof. Edna Day.

New York.—Columbia University, Prof. H. C. Sherman; Teachers' College, Miss Helen Kinne.

Pennsylvania.—Drexel Institute, Miss Emma Smedley.

Tennessee.—University of Tennessee, Prof. C. E. Wait and associates.

THE COOPERATIVE INVESTIGATIONS.

Data regarding the cooperative investigations carried on during the fiscal year follow:

CALIFORNIA.—Prof. M. E. Jaffa and his associates at the University of California have studied the digestibility and nutritive value of fruits and nuts in different combinations with other foods in continuation of the work of former years. Fruits and nuts and their products have constituted an integral part of a simple mixed diet in these investigations, and special attention has been paid to determining the proportions of nutrients which may be supplied by these foods and the thoroughness with which the body can utilize them. Professor Jaffa has conducted 25 experiments during the past year, which include studies of the digestibility of fruit and fruit products as well as the balance of income and outgo of nitrogen. He has also prepared an article on nuts and their uses as food for the Yearbook of the Department for 1906. The great variety of fruit and nut products obtained in California and the importance of the fruit and nut industry locally make the University of California a particularly suitable place for these investigations. Professor Jaffa has been fortunate in securing for his experiments subjects who have been used to a fruit and nut diet for a long time. For purposes of comparison persons have also been included who have not habitually used such food products in large quantities. The California investigations as a whole have shown that fruits and fruit products may readily supply a considerable part of the total energy of the diet and that nuts may be regarded as a reasonable source of both protein and energy when their use seems desirable.

Little information was available regarding the digestibility and nutritive value of fruits and nuts until the investigations in California were undertaken, and the results obtained have been of very great interest and value both to consumers, fruit and nut growers, and manufacturers of fruit and nut products.

CONNECTICUT.—Prof. F. G. Benedict and his associates at Wesleyan University, Middletown, Conn., planned to carry on a number of investigations with the respiration calorimeter on the heat and carbon-dioxid output and the oxygen intake of persons differing in height, weight, and other physical characteristics, and to continue the studies begun last year in cooperation with the Bureau of Animal Industry and this Office on the nutritive value of cheese. For some time the Carnegie Institution of Washington has carried on nutrition

investigations at Middletown which supplemented and extended the work of the Department. During the year the Carnegie Institution made public its plan to establish a laboratory of nutrition investigations at Boston, and Professor Benedict accepted a call to the directorship of this laboratory. In view of this fact it was deemed best to give preference during the past fiscal year to the preparation in bulletin form of the large amount of material which had accumulated from earlier investigations at Middletown not yet reported, and as a result of this work three reports have been prepared. The first deals with the output of carbon dioxid and heat and the intake of oxygen in different conditions of mental work and rest; the second with income and outgo of carbon dioxid and heat and the intake of oxygen under different conditions of muscular work, and the third reports the results of 184 experiments on the digestibility and nutritive value of cheese as well as of 5 respiration calorimeter experiments in which the value of cheese as a source of energy was studied.

From the elaborate experiments reported it does not appear that mental work exercises a positive influence on metabolic activity—that is, on the amount of oxygen consumed and the carbon dioxid and energy given off from the body.

The cooperative experiments on the digestibility of cheese which it was planned to carry on at Middletown were later undertaken at the Minnesota Agricultural College and Experiment Station. (See p. 49.)

HAWAIIAN ISLANDS.—Considerable material is already in hand which reports the results of studies undertaken to learn the kinds and amounts of food consumed by natives and other residents of Hawaii, but it was not found convenient to undertake additional experiments during the past fiscal year. Though they can not properly be called a part of the cooperative nutrition investigations, it is interesting to note that studies of the nutritive value and use of such foods as marine algæ were undertaken at the Hawaiian Station by Miss Minnie Reed.

ILLINOIS.—Professor Grindley and his associates have carried on 45 artificial digestion experiments with different kinds and cuts of meat to study the effects of different methods of cooking on ease and rapidity of digestion, and have also made cooking experiments which were undertaken to secure additional information regarding the changes and losses sustained by meat when cooked in different ways. As a whole, the work at the University of Illinois has shown that it is possible to control cooking processes so that uniform results may be obtained. Meats of all kinds and cuts are to be ranked among the very digestible foods. No great differences were observed in the ease or thoroughness of digestion of different kinds and cuts of meat.

At the School of Education of the University of Chicago Mrs. Alice P. Norton and her associates have studied the effects of different methods of cooking upon the character and appearance of fruit juice and upon the yield and character of the cooked product. The experiments indicate that when sugar is added to fruit at the close of the cooking period much less is inverted than is the case when it is cooked with the fruit. In the case of apples there was no marked difference in the sweetness of samples with sugar added before and after the cooking period. Apples cooked in water with and without

sugar were less acid than the uncooked fruit. It was found that jelly could be made from fruits (currants, grapes, and plums) without the addition of sugar, but the yield was so small that the jelly would be very expensive. The addition of sugar markedly increased the yield. Jelly with small amounts of sugar kept as well as that made with larger amounts.

MAINE.—At the University of Maine and the Maine Agricultural Experiment Station Director Charles D. Woods and L. H. Merrill have made 25 digestion experiments with modern-process white granular corn meal prepared for the table in different ways. The determination of crude fiber in feces is a subject which presents a number of difficulties, and this question was especially considered in connection with the digestion experiments, as was also the determination of the metabolic nitrogen in the feces.

The general purpose of the work carried on at the Maine Station was to ascertain whether or not differences existed in the digestibility and nutritive value of corn meal ground in different ways which could be attributed to the method of grinding. It is well known that different methods of manipulation are required to secure the same dishes with old-fashioned water-ground corn meal and with products of modern mills. Data at present available are perhaps too limited for final deductions; they do not indicate that there are any appreciable differences in the nutritive value of breads of different sorts made from the two kinds of corn meal. As a whole, corn meal bread has about the same digestibility as bread from the coarser sorts of wheat flour, and may be ranked with the more thoroughly digestible vegetable foods. When its wholesomeness and palatability are also taken into account, the conclusions are warranted that corn meal justifies its reputation as a very valuable foodstuff and deserves even more extended use than it at present receives.

MARYLAND.—Additional investigations have not been undertaken, but considerable attention has been given to preparing for publication the data accumulated in dietary studies carried on previously in Baltimore public institutions in cooperation with the supervisors of city charities.

MASSACHUSETTS.—Miss Charlotte Bragg, professor of chemistry at Wellesley College, has continued her investigations of the relative merits of different household methods of canning and preserving vegetables, and has found that although corn, peas, beans, and other common garden vegetables may be canned at home, they differ as to the ease with which this may be successfully accomplished. Methods have been elaborated which are suitable for the different classes of vegetables, and it is expected that the results, together with those of earlier investigations along similar lines by Miss Isabel F. Hyams, of the Massachusetts Institute of Technology, will be published in bulletin form.

MINNESOTA.—At the University of Minnesota and the Minnesota Agricultural Experiment Station Prof. Harry Snyder carried on 24 experiments to determine the digestibility and nutritive value of flour in the form of cookies, buns, crackers, and similar foods—that is, flour in somewhat more complex forms than bread. Fifteen digestion experiments with bread made from bleached and un-

bleached flour, and 16 digestion experiments on the effects of different methods of combining bread foods and other foods upon the digestibility of an entire ration were made. In addition to this work Professor Snyder has made, in cooperation with the Bureau of Animal Industry and this Office, 40 experiments on the digestibility and nutritive value of cheese of different kinds and of different stages of ripeness. In all this work the income and outgo of nitrogen have been determined.

The studies with flour products other than bread have, in general, indicated that these foods are rather thoroughly assimilated and agree closely in digestibility with bread made from flour of the same sort. In other words, neither the addition of some sugar, butter, etc., as in making cookies and similar foods, nor an entirely different method of manipulation, as in making crackers, had any material effect upon the digestibility of flour when compared with bread as a standard. In other words, the pancakes, crackers, biscuits, cookies, etc., had practically the same value in the diet as bread from the corresponding kinds of flour when considered as sources of nutrients and energy. The question of relative ease of digestibility and related topics was not considered in these investigations.

From the experiments with old well-cured, with green, with skim milk, and with Swiss, Camembert, and Roquefort cheeses, the conclusion was drawn that all these forms of cheese have a high degree of digestibility. Little difference was observed in the thoroughness of digestion of old well-cured and of new cheese, ripening having a greater effect upon flavor than upon digestibility. There was apparently little difference in the thoroughness of digestion of large or small amounts of cheese, nor were marked differences observed with respect to the digestibility of the different sorts tested. None of the subjects experienced any difficulty with the prolonged cheese diet, and no digestive disorders were observed in the use of cheese in large amounts. As a whole, the investigation demonstrates the high value of cheese as an article of diet.

MISSOURI.—Miss Edna Day, head of the domestic science department of the University of Missouri at Columbia, has for some time been engaged in a study, by microscopical methods, of the comparative digestibility of raw and cooked starch from different sorts of cereals and vegetables. This Office has cooperated with Miss Day in outlining the work and has assisted in other ways, and it is expected that the report of her investigations will be published as one of the bulletins reporting the results of nutrition investigations.

NEW YORK.—Metabolism experiments, in which the income and outgo of calcium, magnesium, and phosphorus were specially studied, have been the principal features of the work on the ash constituents of food carried on at Columbia University under the direction of Prof. H. C. Sherman. As a part of this work experimental dietary studies were undertaken with a view to ascertaining the relative importance of different kinds of food materials for supplying these constituents in a needed amount and the relative economy of different food materials as sources of mineral constituents of the diet. A bulletin has been prepared reporting the results of these investigations.

At Teachers' College, Columbia University, Miss Louise Stanley has made a study of the culinary qualities of old-fashioned water-ground corn meal in comparison with other sorts of corn meal, and has summarized data on the methods of manipulating corn meal in order to secure food products of uniform quality.

Miss Alice Ober, under Miss Kinne's direction, has collected and systematized a large amount of information regarding the courses in home economics, and particularly in food and nutrition, given in American agricultural colleges and other institutions of collegiate grade. The total number of institutions on record which give courses in home economics, and in nearly every case this includes courses in food and nutrition, is 150. Of these about one-third are agricultural colleges and other institutions receiving Government aid. It has been found that the courses differ materially in character and extent of the work required. The investigation as a whole is a valuable contribution to the pedagogics of nutrition.

PENNSYLVANIA.—Miss Emma Smedley, of Drexel Institute, Philadelphia, cooperating with this Office, has carried on a dietary study in a large home for aged women in Philadelphia and in a similar institution near Philadelphia for children. The results of these investigations it is proposed to incorporate, with those of similar studies carried on in Baltimore institutions by Messrs. Langworthy, Pratt, and Knight, in a bulletin on institution dietetics.

TENNESSEE.—Owing to the pressure of other work, Prof. C. E. Wait, of the University of Tennessee, could not conduct the proposed studies of the kinds and amounts of food used in public institutions in and near Knoxville. Attention was, however, devoted to the prepartion for publication of the reports of earlier investigations, and a bulletin has been published on the digestibility and nutritive value of dried legumes. A bulletin reporting the results of dietary studies of families living in the mountain regions of Tennessee has been edited and awaits publication.

PUBLICATIONS.—Since the nutrition investigations were first undertaken 53 technical bulletins and 35 Farmers' Bulletins and other popular summaries have been issued. Abstracts of reports of nutrition investigations have appeared regularly in the Experiment Station Record and numerous popular summaries of articles on nutrition have appeared in the subseries of Farmers' Bulletins entitled "Experiment Station Work." In addition, reports and summaries of data have been prepared annually for the report of the Director of the Office and for other similar purposes. The food and nutrition publications the past year have included three technical bulletins and three Farmers' Bulletins, as well as an article for the annual report of the Office and reports of the nutrition investigations as a whole and an article for the Yearbook of the Department. Several Farmers' Bulletins have also been revised, and much editorial work has been done on popular and technical bulletins which await publication. The publications were as follows:

Experiments on the Metabolism of Matter and Energy in the Human Body, 1903–4. By F. G. Benedict and R. D. Milner. (Bul. No. 175, pp. 335.)

Like the experiments reported in previous publications, this bulletin furnishes important data regarding the transformation of matter

and energy in the body, the demands of the body for nutriment, the effect of muscular work upon such demands, and the actual nutritive value of the different kinds of food materials and their ingredients. The results of 11 experiments, with 5 different men as subjects, are reported. The experiments differ materially from earlier work, in that the respiration calorimeter with which they were made has undergone an important modification which admits of the direct measurement of the oxygen consumed by the subject, thus affording a more nearly complete balance of income and outgo of matter and energy than has ever been possible hitherto. Preceding the account of the experiments is a description of the respiration calorimeter in its modified form.

Iron in Food and Its Functions in Nutrition. By H. C. Sherman. (Bul. No. 185, pp. 80.)

A summary and discussion of previous work on iron in food and its functions in nutrition precede the results of three metabolism experiments, in which the balance of income and outgo of nitrogen, iron, and other mineral constituents was determined, as well as the results of two dietary studies undertaken with special reference to the iron content of the food consumed. Estimates are also given of the amount of iron taken per man per day in 20 dietary studies made under the auspices of this Office in different parts of the United States.

The experiments to determine the amount of food-iron required per day indicate that this quantity is largely dependent upon the nature of the food and the amounts of the inorganic constituents which it contains, but under ordinary conditions lies between 6 and 12 milligrams per day.

As shown by Professor Sherman's investigations, an increase of iron in the diet, when desirable, may be readily accomplished without a corresponding increase in protein by the use of vegetables, fruits, and the coarser milling products of the cereal grains.

Studies of the Digestibility and Nutritive Value of Legumes at the University of Tennessee, 1901–1905. By C. E. Wait. (Bul. No. 187, pp. 55.)

The results of 70 experiments are reported in which the digestibility of white navy beans, red kidney beans, and several varieties of cowpeas was studied with healthy young men as subjects. Generally speaking, the legumes were as well assimilated and digested as are the coarser cereal products, and in some instances the digestibility was as great as that of the finer grades of flour. The investigations as a whole demonstrate the important place which legumes may fill in the diet as economical and palatable sources of protein. The results obtained with cowpeas are particularly interesting, as they show that this typical southern legume has very much the same nutritive value as the better known varieties of beans. When their distinctive and pleasant flavor is taken into account, as well as the many ways in which cowpeas may be prepared for the table, it seems obvious that their use as a food might be profitably extended.

Use of Fruit as Food. By C. F. Langworthy. (Farmers' Bulletin No. 293, pp. 38.)

Market conditions and fruit supply; the color, flavor, and composition of fruits; ripening and its effect on composition; digestibility of fruit and its place in the diet; relative economy of fruits and other

foods; overripe, decayed, and unripe fruit; handling, marketing, and storing fruit; hygiene of fruit, and related questions are considered in this popular summary of data on the subject. The general conclusion is reached that fruits are wholesome, palatable, and attractive additions to the diet, and may be readily made to furnish a considerable part of the nutrients and energy required as a part of the daily fare. Fresh fruits are dilute foods and closely resemble green vegetables of total nutritive value. On the other hand dried fruits are much more concentrated, comparing favorably with some of the cereals and other dry vegetable foods in the amount of total nutrients and energy which they supply per pound.

Potatoes and Other Root Crops as Food. By C. F. Langworthy. (Farmers' Bulletin No. 295, pp. 45.)

Potatoes, sweet potatoes, Jerusalem artichokes, stachys, cassava and other starch-bearing tropical roots, beets, carrots, parsnips, radishes, and other succulent roots, tubers and bulbs, and a number of roots used as condiments are discussed with reference to their composition, nutritive value, and place in the diet. Potatoes and other starch-yielding roots and tubers are important sources of energy in the diet and are comparatively inexpensive when compared with other common foods. The succulent roots, bulbs, and tubers contain a large proportion of water and furnish smaller amounts of nutritive material, pound for pound, than the starchy roots. They, however, constitute an important and useful part of the diet, since they are wholesome, nutritious, and palatable, and, in addition, may be cheaply grown and readily stored in good condition.

Food Value of Corn and Its Products. By C. D. Woods. (Farmers' Bulletin No. 298, pp. 40.)

This bulletin summarizes data on the structure and composition of corn and the effects of different methods of handling and cooking upon nutritive value. Hulled corn, corn breakfast foods, popped corn, and parched corn, and other special foods are considered, as is also the question of wholesomeness of corn, the place of corn in the diet, green corn and its nutritive value, and the pecuniary value of corn and corn products as compared with other common foods.

From the data summarized it is evident that corn may be used to make a variety of wholesome and palatable dishes which agree closely in digestibility and nutritive value with similar foods prepared from other cereals. Considering all its uses, it is fair to say that corn is one of the most important cereal foods, from the standpoint of palatability, nutritive value, and digestibility. It may be prepared for the table in a great variety of ways and in some form or other is deservedly used in the majority of American homes.

Nuts and Their Uses as Food. By M. E. Jaffa. (Yearbook of Department of Agriculture for 1906, pp. 20.)

In this summary of data on the nutritive value of nuts the author has incorporated the results of numerous investigations made under his direction at the University of California, with general information drawn from a variety of sources. Such questions as the flavor, composition, digestibility, and place in the diet of nuts are considered, and nut oils, nut butters, and other nut products are described, as well as the handling and marketing of nuts and the comparative economy

of nuts as sources of nutrients in comparison with more usual foods. As a whole, the data show that nuts are a very concentrated food, even more so than cheese, but when rationally used they are well assimilated and may form a part of a well-balanced diet. Nuts are valuable sources of protein and fat, these two nutrients being characteristic of the more common nuts, of which the walnut and cocoanut may be taken as types. In nuts like the chestnut, carbohydrates are a characteristic constituent and very largely replace fat found in most other varieties. In general it is undoubtedly wiser to use nuts as a part of a regular diet rather than as a condiment or supplement to an otherwise hearty meal.

Some Experiment Station Work Relating to the Food and Nutrition of Man. By R. D. Milner. (Reprinted from Annual Report of Office of Experiment Stations for 1905, pp. 15.)

During the early years of their history the experiment stations in the United States were quite actively engaged in inquiries regarding the composition of feeding stuffs and their appropriate use in the nutrition of domestic animals. In more recent years, however, a considerable number of the stations have undertaken similar investigations on the food of man. As shown by the data summarized in this article, these investigations have had to do largely with the production and distribution of food, the improvement in yield and quality of cereals, improvement in the character of dairy products, food preservation and preparation. In many States the experiment stations are charged with carrying out the provisions of the State pure-food laws, and so it naturally follows that much of the station work on food and nutrition has had to do with the general question of food adulteration and its prevention.

The usual summaries have been prepared for publication in the Annual Report of the Department and that of the Office of Experiment Stations, and other popular publications have been revised. In addition to the above three technical bulletins and one Farmers' Bulletin has been prepared for the press and await publication.

Results of Nutrition Investigations.

As regards the results of the investigations as a whole, it may be said that the studies at the Maine and Minnesota experiment stations of cereal products offer further proof of the high nutritive value of all such food materials and the desirability of using different kinds of meal and flour prepared in a number of ways for securing variety in the diet without additional labor or undue cost. As a whole, the different flours, meals, and other cereal foods found on the market are inexpensive sources of nutrients as compared with many other common food materials and their importance in the diet can hardly be overestimated.

Investigations at the University of California have demonstrated the fact that fruits and nuts and the numerous products made from them may furnish a considerable proportion of the total nutrients of the diet at a reasonable cost, and that these foods are well digested, and should be regarded as staple articles of diet rather than food accessories. Fruits and nuts are most useful as food when eaten in combination with other food materials. The bad effects sometimes attributed to these foods are doubtless often due to overindul

gence or to eating them in quantity at the end of an otherwise hearty meal.

The extended investigations at the University of Illinois, which have had to do with losses sustained when meat is cooked in various ways, have shown that the loss is smaller in boiling than in roasting or frying. In general the principal constituent lost in cooking is water, though when meat is boiled the amount of the total substance which is removed may be as great as 20 per cent. Generally speaking, the smaller the cut the greater the percentage of loss in cooking. Meats of all kinds and cuts are well assimilated, and in the numerous experiments reported no constant differences in digestibility were observed which could be attributed to the method of preparation or the kind of meat used. Experiments which have to do with ease of digestion indicate that meat of all sorts is readily acted upon by the digestive juices. Constant differences were not observed which could be attributed to the kind or cut or to the method of preparation.

The studies at the University of Tennessee of the nutritive value of dried legumes have shown that in general these foods are well assimilated and may be made very important and economical sources of protein in the diet. Particular interest attaches to the results obtained with cowpeas, an important crop in the Southern States but little known in other regions. This legume, which possesses a distinctive and palatable flavor and may be cooked in a variety of ways, has been shown to closely resemble the more common beans and peas in digestibility and nutritive value and is well worthy of general use.

The experiments on the ash constituents of food, carried on at Columbia University, New York, have shown that amounts of such foods required, though small, are fairly constant, and that any deficiency in the iron, phosphorus, calcium, or magnesium may be readily supplied by adding food materials rich in the desired constituents to the diet. If a proper selection of foods is made neither the total nutritive value of the diet nor its cost will be unduly increased.

The importance of the investigations on the digestibility and nutritive value of cheese carried on at Middletown, Conn., and the Minnesota Agricultural Experiment Station is very great, since the results have shown that cheese did not cause digestive disturbance, as is commonly supposed, and may be used in comparatively large amounts as an inexpensive source of protein and energy in the diet. When intelligently used, cheese should be combined with cereal foods, fruits, and similar products, and when eaten in quantity should replace rather than supplement such nitrogenous foods as meat, eggs, and dried legumes.

The dietary studies in public institutions in Baltimore and Philadelphia have clearly shown that the food requirements of the aged are less than those of younger persons in full vigor, and a factor has been proposed for use in calculating the results of dietary studies, which expresses this relation.

Investigations with the respiration calorimeter at Middletown, Conn., have furnished new and valuable factors regarding the average amount of energy required by man at rest and performing different kinds of muscular work, the carbon dioxid and energy output

at different times of the day and under different conditions of rest and work, the diurnal variations in body temperature, and related topics. Such investigations have practical application in considering the food requirements of man and are also of great value in the teaching of physiology and the discussion of physiological problems. So far as could be learned from an extended series of tests, mental work does not depend upon increased metabolism of nutrients and energy. With muscular work the result, of course, is true, the amount of work performed being the determining factor in the kind and quantity of nutrients metabolized in the body.

The chief object of the nutrition investigations is to secure the better utilization of the various agricultural products which are used as food, and it seems fair to say that much has already been accomplished along this line. The housewife in the farm home or in the town has at her disposal a large amount of data regarding the composition, digestibility, and nutritive value of foods and their relative economy as sources of nutrients and energy, which will aid her in making good use of her available food supply, and will help her to prepare for her family a diet which is rational and suited to their physical needs. At the same time the investigations have shown the importance of having the daily fare palatable, well cooked, and attractive, and have shown how such requirements may be met without undue cost. The manufacturer and the distributer of food products are likewise helped by the dissemination of knowledge concerning food materials and their preparation, for such knowledge means a greater development of the important commercial enterprises in which they are interested. And, finally, the farmer, the cattle raiser, the dairyman, the market gardener, and all who are direct producers of food supplies are benefited, as a knowledge of the important facts regarding the comparative value of different foods can not fail to bring about improved standards of living, and hence a greater demand for the foodstuffs which they alone can supply.

Public interest in the education of women with special reference to their duties as home makers has greatly increased in recent years. This has led to the establishment throughout the country of numerous courses in domestic science or home economics in colleges, and normal, high, and elementary schools. An important part of these courses has been instruction relating to the nutritive value of foods and the best ways of preparing them for the table. The nutrition investigations of this Office have furnished a large share of the data on which such courses have been based, and our nutrition publications have had a wide circulation among teachers and students. In this way these investigations have proved of great educational value.

With the completion of the new Department building it will be possible to install the respiration calorimeter there and then to continue investigations of the fundamental problems of human nutrition with this apparatus, which has proved so effective for this purpose. The problems of the rational and economical utilization of our agricultural products as human food are so intimately and vitally related to those connected with the production of these foodstuffs on the farm that it seems very desirable that the National Government shall continue to study the problems of nutrition and to diffuse useful information on subjects connected with the nutritive value and economy

of different foods among our schools, our housewives in country and town, and the people generally. With the cooperation of colleges, experiment stations, public institutions, and philanthropic organizations it is possible to do a large amount of work along this line with relatively small expense to the Government. And no agency can compare with the National Government, and particularly the Department of Agriculture, in the widespread and rapid diffusion of information on this subject throughout the country. It is hoped, therefore, that Congress on further examination of this matter will provide for continuance of the nutrition investigations, and I therefore recommend that $25,000 be included in the estimate for the fiscal year 1909 to enable this Office to reconstruct the respiration calorimeter and install it in the new Department building and to conduct nutrition investigations with this apparatus and also in cooperation with agricultural colleges and experiment stations and other organizations in different parts of the country, as heretofore.

NUTRITION INVESTIGATIONS FOR 1907-8.

It was planned during the fiscal year 1907-8 to continue the nutrition investigations along a number of the same lines as heretofore and to institute such new work as the completion of several topics already under investigation would warrant. The failure of Congress to provide appropriation for this work prevents the carrying out of such plans. The sum of $5,000 was appropriated by Congress for the purpose of moving the respiration calorimeter and other apparatus from Middletown to Washington and storing it, and this has been done.

IRRIGATION AND DRAINAGE INVESTIGATIONS.

The Irrigation and Drainage Investigations of this Office have continued during the past fiscal year under the immediate supervision of Dr. Elwood Mead, with Mr. C. G. Elliott as chief drainage engineer and Mr. R. P. Teele in charge of publications. The field offices at Cheyenne, Wyo., and Berkeley, Cal., have been maintained, the former being in charge of Mr. F. W. Roeding, and the latter in charge of Prof. Samuel Fortier.

IRRIGATION INVESTIGATIONS.

GENERAL CHARACTER OF THE WORK.

With the extension of the irrigated area in the arid region economy in the use of water is increasingly important. In many sections the limit of the water supply is already reached, and future extension depends absolutely upon the use of less water on the areas now irrigated. The same condition is approaching in other sections. Therefore, from its beginning, the leading feature of the irrigation work of this Office has been a study of ways of bringing about economy of water. State laws provide against waste. Ditch companies agree to furnish only so much water as is necessary for the raising of crops; in fact, the basis of all water rights is a beneficial use of the water taken from streams. The use of more water than is necessary when such use deprives other land of water, is as truly waste as the turning of water in the roadways or on unused land, and the determination

of the quantities of water necessary for crop production lies at the foundation of the prevention of such waste. Thousands of acres of productive land have been ruined by the use of too much water by farmers who thought they were using only what was necessary, in this way adding the ruin of their own lands to the deprivation of the lands of others. When the irrigation work of this Office was undertaken this was considered the most important question connected with irrigation in this country, and the work was practically confined to this one subject. It is still considered of the greatest importance and is a leading feature of our work.

The first work done was to measure the water used in general practice at points throughout the arid region, the data collected to serve as a basis for more scientific work in determining the quantities of water necessary for crop production. This preliminary work is still carried on in sections where irrigation is new and a demand for such information comes from ditch owners and farmers. It is, however, being supplemented by the more advanced studies, at a number of points.

In these studies the degree of wetness of the soil which produces the best crop is determined, and then the attempt is made to secure and maintain this percentage of soil moisture with the least possible supply of water. The method used is as follows: Crops are planted and records of their conditions are kept throughout the season. Different quantities of water are applied to plats, and at regular intervals of time samples of soil are taken and the percentage of soil moisture determined. In this way the percentages of soil moisture producing the best growth of crops in various types of soil are determined. These experiments promise to give a much better knowledge of the quantities of water necessary for the growth of crops than we have been able to arrive at heretofore, and should be continued and extended, since they will furnish the basis for intelligent judgment as to how far it is possible and profitable to carry economy in water.

The water necessarily used can never be limited to the quantities consumed by the plant and required to maintain within its root zone the percentage found to be best for plant growth. Water is lost from ditches, it is evaporated from the soil, and percolates beyond the reach of plant roots, and it is not possible to eliminate these losses entirely.

Early measurements of seepage losses from ditches, made by this Office, show the loss to be somewhere between 30 and 50 per cent of the water entering the canals. These losses can be stopped by lining the canals with cement or by carrying the water in pipes, but the cost of these improvements is prohibitive in most sections. What is needed is some canal lining which will check the losses and yet come within the limits of cost which can be borne by general farm crops. This Office has been carrying on experiments and collecting information as to lining now in use, and a bulletin giving the results of these studies is now being issued as a bulletin of the California Agricultural Experiment Station, which cooperated in the work. Further experiments should be made throughout the arid region, as the limits of cost make it necessary to use local materials.

During the past year there has also been published by this Office a bulletin giving the results of experiments to determine the effective-

ness of different methods of applying water and of subsequent cultivation in checking losses of water by evaporation from the soil.

Studies of percolation, carried on in California, show the great importance of examinations to determine where the water applied in irrigation is going. The depth of percolation depends upon the character and condition of the soil and subsoil, and only with a full knowledge of these can the irrigator decide intelligently on how he shall apply water. By adapting the method to soil conditions it should be possible to prevent any considerable waste by percolation. A report on these experiments is being prepared for publication.

It is one thing to determine the best percentages of soil moisture and how to secure and maintain them, and another thing to limit use to these amounts and secure the adoption of proper methods. So long as the water wasted does little injury to the one wasting it, and costs little more than the smaller quantities, it is difficult to induce economy. This must be brought about by such laws or water-right agreements as will make it an object to the farmer to use the smallest quantities which will produce good results. The study of irrigation laws and institutions of this country and abroad is made a part of the work of this Office by Congress, and this study has been taken up generally from this standpoint—what laws and what forms of organization and agreements tend to the most economical use of water. There is, of course, a large demand on this Office for information as to what are the laws of different States and countries, and a number of bulletins giving such information have been published, but the primary object of the studies of laws and institutions is the determination of their influence upon the economical use of water in agriculture. New conditions are constantly arising which demand new legislation, and the reports of this Office showing how similar conditions have been met in our own States and by foreign countries are in great demand. The large number of new canals now being built has brought a corresponding demand from both canal promoters and settlers for information regarding agreements for supplying water to farmers. During the past year reports discussing the administrative laws of all our arid States and Territories and of Italy have been published, and also the text of the irrigation and drainage laws of Italy. The Italian reports also discuss the organization of irrigation companies and their methods of dealing with water users. Laws and regulations governing the use of water have as great an influence upon the success of agriculture by irrigation as do physical conditions, and these studies of their influence upon the industry should be continued.

Wherever investigations of any character are made by this Office those doing the work are collecting information as to the methods used for performing all the operations connected with applying water. There is accumulated in this way a vast sum of information on methods, tools, cost, etc., which can be made of great value to all those using water for irrigation, but especially to new settlers. The results of these investigations have been published in bulletin form for distribution to those interested, but it has been found that this method of dissemination is not entirely satisfactory—it must be supplemented by personal advice and demonstration. This is especially needed where large areas of land in compact bodies are being reclaimed by the Government and by private parties. Such areas must depend for settlers upon the thickly settled humid regions, and the

great majority of these settlers come wholly unfamiliar with irrigation practice. They must be shown how to prepare their land for irrigation most effectively and with the least expenditure of time and money; they must be advised as to the methods best suited to their lands and the crops to be raised, and be shown how to lay out ditches and apply water. An agreement has been entered into by this Office, the Bureau of Plant Industry, and the Reclamation Service of the Department of the Interior for the establishment of such demonstration farms on the projects of the Reclamation Service. There is also call for additional farms in other sections being reclaimed by private enterprise. In no way can the Department be of greater service than in the establishment of demonstration farms.

IRRIGATION EXTENSION.

The last few years have witnessed unprecedented activity in the settlement of the semiarid section of the Great Plains. It is claimed by those promoting this settlement that agriculture can be carried on successfully without irrigation. Intensive cultivation with specially designed tools and summer fallowing are depended upon to conserve the scanty rainfall, making it possible to grow crops in alternate years. Previous failures to maintain homes in this region lead to the belief that there will be many years when the moisture will be insufficient to mature crops, even with all the improvements in cultural methods and in drought-resistant crops, and many settlers who have little means to carry them over such seasons will be forced to abandon their homes. For this reason this Office has begun a study of the possibilities of irrigating a small part of each landholding in order that the settler may provide every year a food supply for his family and feed for his work animals, and beautify his surroundings with perennial plants. In this way he can maintain his home during dry years and depend upon the wet years for his profits. Practically all of these lands are beyond the reach of canals from large streams, and must depend upon water taken from the torrential streams of the plains during storms, water pumped from wells, or water stored in small reservoirs during storms. To encourage settlers in undertaking irrigation in this small way and for the purpose of being able to supply information as to methods and cost of securing a water supply, preparing land for irrigation, applying water, and cultivation after irrigation, this Office has established several farms in the semiarid region. The experiments being conducted include pumping water with windmills, gasoline engines, and alcohol engines; irrigation in the winter or spring with water taken from a small stream during its flood period, followed by cultivation throughout the growing season; irrigation throughout the growing season with pumped water; and, for the purposes of comparison, raising crops without irrigation, with and without summer fallowing. In addition a study of small reservoirs built for storing storm water on the plains has been made, and a bulletin discussing rainfall, drainage area, run-off, methods of construction, crops grown, and profits from irrigation has been published.

Farms for the experiments described have been established at Cheyenne and Newcastle, Wyo.; Eads, Colo., and Wichita Falls, Tex. No branch of our work is of greater usefulness than these

experiments, and other farms should be established at points along main lines of travel so that they will serve as object lessons to incoming settlers.

Work somewhat similar to that on the Great Plains is being taken up in the Sacramento Valley in California and the Willamette Valley in Oregon. The rainfall during the winter and spring is heavy, and has been sufficient for maturing grain crops, but continuous cropping with wheat has exhausted the soil. The summers are dry, so that crops growing throughout the summer can not be raised. In the Willamette Valley, experiments are being made to determine the cost of providing water to carry crops through the dry summers. The situation there is peculiar. The dairy industry is of great promise, but it is necessary to provide feed for the cows during the hot, dry summers. If irrigation can be practiced it will give the cattle green feed throughout the year, making possible a great extension of this industry.

In the Sacramento Valley, also, wheat raising has seen its best days, and the raising of other crops requires irrigation. A study of the conditions of this valley to determine its needs is now being made.

The studies of irrigation practice in rice growing have been continued, and there is now being prepared a report which will bring together the results of all our work in this field for the purpose of supplying to those intending to enter on the raising of rice the information they need to take up the work intelligently.

POWER FOR IRRIGATION.

For the individual irrigation plants suited to the semiarid region and to many other sections, pumping is usually best suited, but the settlers need information as to the types of pumps and engines to buy, most economical fuels, methods of handling engines and pumps, and as to quantities of water which can be secured with windmills of various sizes.

This Office has in the past collected and published a large amount of data regarding pumps in use, and last year made a large number of mechanical tests of pumping plants under both field and laboratory conditions, to determine efficiencies, fuel consumption, cost, etc. This season further experiments are being carried on in connection with the irrigation extension farms just mentioned.

The passage of the law removing the tax from alcohol for industrial uses produced a great demand for information as to the use of alcohol in engines, and during the past year this Office conducted a series of tests to supply this information. It was found that alcohol can be used in practically all of the internal-combustion engines now in common use without material changes in their construction; that the engines worked with about the same efficiency with alcohol as with the fuels for which they were designed. Since the heating value of alcohol is less than that of gasoline it requires a larger quantity of alcohol than of gasoline to produce a given amount of power. Therefore until alcohol is cheaper than gasoline it can not profitably be substituted for it. The report of these tests, which has been published, gives details of all the adjustments of the engines necessary to get the best results, and should be of great value to farmers using engines, whatever fuel is used.

DRAINAGE INVESTIGATIONS.

A careful estimate based on a canvass made by this Office places the area of swamp land within the United States east of the one hundredth meridian at 77,000,000 acres. This land may be divided into three classes, although they are not distinct—lands which are too flat or have not sufficient outlet to discharge the rainfall, those subject to overflow by streams, and tidal marshes along the coast. In addition to the above large areas of lands now under cultivation are too wet to raise full crops and need underdrainage. Each of these classes has problems peculiar to itself which are being studied by this Office. Aside from physical differences, the first two classes differ materially from the third in another particular. Underdrainage is a problem for the individual farmer. The influence of a field drain extends but a few hundred feet at most, and when an outlet is provided each farmer may drain his land independently of his neighbors. No public questions are involved. On the other hand, the provision of main drains for large areas of wet lands, the protection of bottom lands from overflow, and the reclamation of tidal marshes involve the cooperation of large numbers of landowners and the exercise of certain public functions for securing rights of way, for compelling all land benefited to bear its share of the expense incurred, for the levy and collection of taxes, and for maintaining the works built. The granting of governmental powers involves the obligation on the part of the Government to see that those powers are wisely exercised. Direct supervision of the administrative acts of drainage districts is exercised by the public officials of the States, guaranteeing honest administration, but no provision is made for giving to districts any engineering advice to secure wise administration. That function is being fulfilled by this Office, so far as its means allow. Under its supervision local conditions are investigated and plans recommended, and advice is given as to construction, but it takes no part in construction. The work must be done by the local organizations. The demands for such aid from this Office are far in excess of our means for meeting them, and a largely increased allotment can be profitably expended in making such examinations and plans.

In the arid region irrigation has brought about drainage problems peculiar to that section. The use of large quantities of water in irrigation has raised the ground-water level, causing the swamping of large areas and the accumulation of alkali to such an extent that crops can not be grown. In that section the principal drainage work of this Office consists in making experiments to work out methods of reclaiming the lands already injured by seepage and overirrigation and of preventing such injury where it has not already occurred. Underdrainage has been proven to be the proper remedy, but the details of depths of drains, location of drains, distance apart, economical outlets, and cheap materials for drains need to be worked out, as well as special problems where conditions are unusual. Experiments are being carried on to determine these factors in Utah and California, while for projects involving considerable areas surveys are being made and plans suggested, as in the humid region.

The details of the work being done in the several States, in both irrigation and drainage, are given in the following pages.

REVIEW OF IRRIGATION WORK.

CALIFORNIA.—The irrigation work in California continues under the direction of Samuel Fortier, with headquarters at Berkeley, at the State experiment station, which furnishes office room free of charge. The State of California also contributed $7,500 to the expense during the year.

The Sacramento Valley is potentially one of the most important valleys in the irrigated territory. But thus far only a small fraction of the irrigable land is being watered. There are several contributing causes to this: (1) The Sacramento River, being a navigable stream, diversions must be sanctioned by the War Department; (2) large estates, and the ability to grow certain crops without irrigation, have been a retarding influence; (3) the character of the soil makes special methods of applying water a necessity in many districts, and the adoption of wrong methods has worked against the popularity and success of irrigation; (4) belief that irrigation causes malaria. Notwithstanding these adverse influences, irrigation is being extended far more rapidly than ever before, a majority of the settlers coming from humid States. This has given rise to many social, legal, and engineering problems which this Office has been asked to help solve. It also brings many practical inquiries about the valley's resources and about how to irrigate farms. To meet these demands there is needed a more detailed knowledge of conditions and possibilities, and Professor Fortier is making the studies necessary to collect these data and make them available in bulletin form.

In the Imperial Valley, in southern California, 500,000 acres of land are being brought under cultivation under exceptional conditions of soil and climate. It is a region of perpetual summer, where crops grow throughout the year. Nearly all of the land irrigated is below sea level, and while at present it has excellent natural drainage, much of the land must be sparingly irrigated or underdrained if permanent injury from seepage and alkali is to be averted. The high summer temperature, the great value of many of the crops grown, the muddy water used in irrigation, all require modifications of irrigation practice prevailing in most other sections. The area now watered is less than 100,000 acres, but when all the land has been watered that can be, it will be the largest irrigated area from a single canal system in the United States. The division of water between the different canals and laterals is now an important matter and it will become very much more complex and difficult in the near future. To work out an efficient system there is needed a definite knowledge of the duty of water on different crops, the extent of the seepage and evaporation losses from canals and laterals, and the frequency with which irrigation is required. The rapid growth of aquatic vegetation is also a serious obstacle to the operation of laterals. The means of preventing this growth or of lessening the cost of removing it are to be investigated. In addition to this, more information is needed regarding the frequency with which crops should be irrigated, the length of time irrigation should continue, and the methods of preparing land and applying water. All of these subjects are being studied under a cooperative arrangement with the State. Prof. Samuel Fortier has general supervision and Mr. C. E.

Tait is the irrigation engineer in charge. The California Development Company, operating the canal, is also cooperating in some of these investigations and rendering important assistance. Additional cooperation has also been arranged for with several of the mutual water companies.

The Modesto and Turlock districts include, together, over 250,000 acres of irrigable land. For several years this investigation has been cooperating with the management of these districts in the measurement of seepage losses from the main and lateral canals, and of the duty of water both under the system as a whole and where measured at the place of use. In some sections of the main canals seepage losses have been proven to be heavy, requiring lining or treatment to prevent these losses. In cooperation with the districts, data are being collected with respect to the cost and effectiveness of lining certain sections of the canal. The irrigation of the lands of these districts has resulted in filling up the subsoil in several localities and necessitating drainage. In some localities the cost of gravity outlets for drains has been so great as to make it seem more profitable to shorten the drains by lifting the ground water to the surface. The districts have installed several pumping plants and this investigation is cooperating in the study of the results. A third line of investigations being carried on here is the study of the different methods of applying water to grain crops, and the effect of the irrigation of grain.

COLORADO.—The work carried on includes experiments to determine the feasibility of irrigation with small water supplies in conjunction with dry farming, and comparison of results of different methods of irrigation and cultivation. Water is pumped with centrifugal pumps and engines using alcohol for fuel to determine the value of this fuel under field conditions. Careful records of the methods used and the cost of all operations are kept, and will be published for the benefit of settlers in this section. This work is in charge of W. H. Lauck, under the supervision of F. W. Roeding.

Experiments with sugar beets at Rocky Ford include trials of irrigation in alternate furrow spaces only, instead of irrigation in every space, for economy in water; the use of small streams flowing for long periods rather than larger streams for shorter periods, to more thoroughly wet the ground and at the same time use less water; plowing and subsoiling to measure effect on water requirements; and different degrees of cultivation to determine effect on water requirements. The work is in charge of R. G. Hemphill, under the supervision of F. W. Roeding.

Experiments in orchard irrigation have been carried on at Canyon City, and the results of irrigation by methods in general use in that section have been compared with those secured by the California practice of clean and continuous cultivation and the use of smaller amounts of water in irrigation. The work is in charge of R. G. Hemphill, under the supervision of F. W. Roeding.

IDAHO.—Experiments at the Caldwell substation of Idaho Experiment Station include winter irrigation *v.* ordinary practice with wheat; effectiveness of mulches and different methods of applying water in the prevention of losses of irrigation water. The work is

done in cooperation with the State station and is in charge of Elias Nelson, assisted by John Krall.

On the Minadoka reclamation project a demonstration farm is to be carried on in cooperation with this Office, the Bureau of Plant Industry, the Bureau of Soils, and the Reclamation Service. Little will be done during the season of 1907. The work on this farm is for the purpose of demonstrating to new settlers the proper methods to employ in bringing their land under irrigation, in applying water, and in cultivating after irrigation to conserve the moisture applied. The work of preparing the land for irrigation, laying out ditches, and applying water will be done by this Office. This work will be in charge of Elias Nelson.

IOWA.—Experiments at the Iowa Agricultural College are being made to determine the feasibility of irrigation in humid sections. A part of the station farm is being irrigated with sewage water, the crops being cabbages and tomatoes. In charge of M. L. King.

LOUISIANA.—Collection of information on irrigation of rice in Louisiana and Arkansas, including methods and cost of preparing ground and all subsequent steps in raising rice in which irrigation is a factor. Also mechanical tests of pumping plants used for irrigation. The purpose of this report is to supply the intending rice farmers full information as to the method and cost of the work which they must perform in entering this industry. In charge of Prof. W. B. Gregory, of Tulane University.

NEBRASKA.—Irrigation methods and practices in the North Platte Valley have been studied, attention being devoted to the cost of building canals, the cost of water rights, annual charges for water, character of water-right agreements, crops and acreages under each canal, yield and average value of crops, ditch maintenance and management, including methods and efficiency and cost, stream administration, litigation, and canal organization. The work is in charge of Prof. O. V. P. Stout, of Nebraska State University.

NEVADA.—A report is being prepared giving the results of investigations covering several years, the results of which have not been published. This will include duty of water measurements, a discussion of irrigation practice, and of the operation of the State irrigation laws. Prof. G. H. True, of the State University, will report on duty of water and irrigation practice, and Prof. H. G. Thurtell, former State engineer, will prepare the discussion of the operation of the irrigation laws. The work is done in cooperation with the State.

OREGON.—Irrigation experiments have been carried on to determine the feasibility of irrigation in the Willamette Valley, which receives very heavy rainfall except during the summer. At the Oregon Experiment Station at Corvallis experiments are being made in irrigating hops, alfalfa, potatoes, and corn for comparison with unirrigated crops. Hops often fail to mature before frost, and one purpose of the experiment is to determine whether irrigation will hasten their maturing, so as to avoid this danger. Alfalfa has not succeeded well here on account of the long drought in late summer, and the experiments will determine the feasibility of irrigating it during this dry period. If alfalfa can be successfully grown, it will aid

greatly the dairy industry, which suffers because of lack of forage during the summer. At Philomath experiments are being made in the irrigation of onions and small vegetables for comparison with unirrigated crops. At Hillsboro potatoes will be irrigated to determine whether irrigation will not make possible the raising of a second crop during the late summer. At Albany experiments in irrigating alfalfa and clover will be made to determine the possibility of restoring worn-out wheat lands in this way and adapting them to dairying. This work is in charge of A. P. Stover, assisted by Charles A. Reed.

South Dakota.—In connection with the Belle Fourche reclamation project, a demonstration farm has been operated for the purpose of showing new settlers how to prepare their land for the application of water, how to apply water, how much water to apply, and in general how to carry on agriculture under irrigation. This work is to be done in cooperation between this Office, the Bureau of Plant Industry, the Bureau of Soils, and the Reclamation Service.

Texas.—At Wichita Falls an irrigation extension farm has been established to determine the feasibility of irrigation with small water supplies in conjunction with dry farming in the semiarid region. The experiments include plats of sugar beets, potatoes, wheat, oats, barley, alfalfa, corn, strawberries, and cotton, and ornamental trees and shrubs. Different plats will be irrigated in different ways, and moisture determinations will be made from time to time for purposes of comparing results of these methods in conserving the water applied. The work is in charge of F. W. Roeding, assisted by Charles Rivers.

Utah.—At the Utah Experiment Station experiments were made to determine the effect of applying different quantities of water; of applying water at different stages of plant growth; of applying water by different methods, and of different degrees of cultivation. In Weber River Valley duty of water studies are being made to aid the State engineer in preparing for the settlement of water rights. Throughout the State experiments for improving irrigation practice are being made in cooperation with farmers who irrigate certain parts of their fields according to methods outlined by this Office for comparison with fields irrigated according to their usual methods. The work is in charge of Prof. W. W. McLaughlin, of the Utah Agricultural College. This work is done in cooperation with the State.

Washington.—Information has been collected for a report on irrigation in the State of Washington, showing irrigation situation and needs of the State. This report is to include descriptions of irrigation works, irrigation practice, water rights, canal and crop returns. The work is in charge of S. O. Jayne.

Wyoming.—At the Cheyenne Irrigation Extension Farm, experiments have been made to determine the feasibility of irrigation with small water supplies in conjunction with dry farming, and experiments with windmills to determine efficiency and cost of operation. A part of the farm is farmed without irrigation, a part is irrigated from a small stream only during the high-water period in spring,

and a part is irrigated throughout the growing season with water pumped by the windmills. All water used is measured, and different degrees of cultivation are given, soil-moisture determinations being made to determine the effect of this cultivation. Careful records of methods and cost of performing all operations are kept and will be published as a guide to settlers in the semiarid region. The work is in charge of John H. Gordon, under the supervision of F. W. Roeding. The Cheyenne Board of Trade contributes to this work.

At the Newcastle Irrigation Extension Farm experiments have been made to determine the feasibility of irrigation with small water supplies in conjunction with dry farming. The experiments include comparison of results under different methods of cultivation and irrigation, and determinations of cost of pumping water with centrifugal pump and gasoline engine. The work here is similar to that at Cheyenne, Wyo., Eads, Colo., and Wichita Falls, Tex., and is in charge of R. E. Mahoney, under the supervision of F. W. Roeding.

In the Wind River Valley experiments have been made to determine the best methods of irrigation and to assist new settlers in the recently ceded portion of the Wind River Indian Reservation. This land has recently been opened to settlement, and the work here is both an experiment and a demonstration, as most of the settlers come from sections where irrigation is not practiced. The work is in charge of H. G. Raschbacher.

In the Big Horn Basin investigations of duty of water and methods of supplying water have been made, the purposes being measurement of the water used by irrigators in the different parts of the basin and observations of resulting crop conditions; advising farmers as to measuring water and applying it to crops; collection of data as to acreages and crops grown; collection of information as to water-right agreements, rules, regulations, and by-laws of canal companies, and charges for water; collection of information regarding the success of the Carey Act projects, and data as to area and location of lands injured by alkali. All of the above data are to be used in preparing a bulletin on irrigation in the Big Horn Basin. The work is in charge of Charles A. Lory.

Review of Drainage Work.

Arkansas.—Drainage District No. 2 is in Lee County. Surveys and plans were made for this district, which contains about 75,000 acres, the work being in charge of S. H. McCrory.

The plans of a drainage district near Pine Bluff were also examined and passed upon by Mr. McCrory, who also collected information as to all drainage districts which have been organized in the St. Francis Basin, to serve as a basis for future work in that section.

Boggy Bayou drainage project is in Desha County. The central and southwestern parts of Desha County, embracing about 135,000 acres, are drained by a number of bayous which, naturally or from the construction of the Mississippi River levee, have their outlets in Boggy Lake or Bayou. Originally this bayou had an outlet into the river, but the levee cuts this off, leaving this section without proper drainage outlet. Surveys and plans for such an outlet were made by this Office, the estimated cost being about $50,000. The work here is in charge of John T. Stewart, assisted by D. G. Miller.

CALIFORNIA.—In the immediate vicinity of Fresno, some 30,000 acres of land has been injured by the rise of ground water and accumulation of alkali in the surface soil. A comprehensive plan to drain this area by a gravity system of tile and open drains, or by a combination of pumping and tile drains, was made several years ago but has never been carried out. A modification of this plan is now being tried through the installation of two small pumping plants to lift the water collected from 40 acres by tile underdrains. Records are being kept of the amount of water lifted, of the depth to which the water plane in the soil is maintained, and of the effect of lowering the water plane on the growth of crops and on the percentage of alkali in the surface soil. This work is in charge of Prof. Samuel Fortier, assisted by V. M. Cone. The work is being carried on in cooperation between this Office, the State of California, and the landowners of the district affected, the greater part of the expense being borne by the landowners. Similar experiments are being made in the Modesto and Turlock districts, where irrigation has raised the ground water to a dangerous extent.

COLORADO.—Work in the Arkansas and San Luis valleys has consisted in the collection of information regarding drainage already undertaken and making plans for drainage in sections where people are most interested. Large areas in these valleys have been injured by overirrigation or by seepage water, and the accompanying accumulation of alkali. The relief of these lands requires not only farm drains but large outlet drains which must be built by cooperative effort. The investigations made by this Office are for the purpose of recommending plans and encouraging the communities interested to unite in carrying them out. This work is in charge of Arthur E. Morgan, assisted by S. H. McCrory.

FLORIDA.—The State is undertaking the drainage of the Everglades, and this Office is assisting by making investigations to determine how this should be done. During the winter and spring of 1907 a line of levels and soundings was carried across the State. The work will be continued this year. A survey will be made to determine the cheapest route for a canal from Lake Okeechobee to the ocean. This will require the running of a line of levels from the south end of the lake east to the ocean and a line southwest to the Gulf. In addition, soundings should be made to determine the depth of muck in different parts of the Everglades, and an examination should be made to determine the probable agricultural value of the lands surrounding Lake Okeechobee which would be reclaimed by lowering the level of the lake. The work is in charge of J. O. Wright, assisted by John T. Stewart, Lawrence Brett, and party.

INDIANA.—This Office has for several years cooperated with the Kankakee drainage committee in investigating drainage conditions in the Kankakee Valley, making the surveys necessary to locate a corrected channel of the river, determine its size, and locate the main drains. The field work was completed during the season of 1906, and a preliminary report has been prepared and submitted to the interested parties.

KANSAS.—A report is in course of preparation on investigations made during the past year to determine methods of protecting and

draining the river bottoms from Emporia to the Kansas-Oklahoma line. Large losses have occurred because of the overflow of this stream, but owing to differences of opinion as to methods and lack of cooperation the residents of the valley have not been able to secure protection from this overflow. This Office has collected the data and made the surveys necessary for the formulation of a plan which will be recommended to the landowners of the valley. The work is under direction of J. O. Wright, assisted by Lawrence Brett.

LOUISIANA.—The Coolie Drainage District in Morehouse Parish—a drainage district covering about 20,000 acres—had been organized before this investigation. At the request of its officials, its plans were checked by surveys and examinations, and a final plan for the drainage of the district was agreed upon. The estimated cost of the work recommended is $27,855. In charge of L. L. Hidinger.

MINNESOTA.—Experiments in tile drainage have been carried on at the Northwest Experiment Farm of the State at Crookston. The success of tile drains in this section is doubtful, on account of the long, cold winters and the depth to which the ground freezes—about 6 feet. Plans were made by this Office in 1906, and the work in 1907 is limited to supervising the laying of the tile, the work being in charge of John T. Stewart.

MISSISSIPPI.—In Washington County, surveys and plans were made for the main drainage of 187,000 acres, lying between Deer Creek and the Mississippi River levee. The plans contemplate the improvement of the Black Bayou, at an approximate cost of $230,000, and it is estimated that a large part of the land will produce large crops of cotton when drained. This work is in charge of L. L. Hidinger.

Plans were also made for the Coahoma Drainage District No. 1, in Coahoma County. The district contains 21,000 acres, the estimated cost of drainage being $45,000.

NEBRASKA.—Experiments have been made to determine the efficiency of tile drains in removing surplus water and alkali and also surveys for outlet ditches in the vicinity of Lexington. Large areas in the Platte Valley in Nebraska are injured by water coming down from the higher lands both from natural drainage and irrigated lands. Natural outlets for this water are insufficient and its accumulation has caused the rise of alkali in injurious quantities. The lands, therefore, need outlet ditches to prevent the water from the hills standing on the surface and underdrains to provide for washing out the alkali. Tile drains have been put in a field at Lexington, and the land is being cropped and irrigated to determine the efficiency of this method of reclaiming the land. D. G. Miller is in charge of this work.

NEW ENGLAND, NEW JERSEY, AND DELAWARE.—The work in these States consists in the collection of information regarding salt marshes and examinations of same, to determine areas, attempts at reclamation, and value of lands; and the making of experiments to work out best methods of reclaiming such lands. These lands are near markets and are generally fertile when protected from overflow and relieved of surplus salt. If this can be done at reasonable expense and with assurance of permanency, it should prove of great

value to the Atlantic coast States. The work is in charge of J. O. Wright, assisted by H. A. Kipp and others.

NORTH CAROLINA.—The bottom lands along the Roanoke River and its tributaries are subject to overflow, and investigations are being made to determine the feasibility of protecting and draining these lands, and the best methods of doing this. The work also is in charge of J. O. Wright, assisted by H. A. Kipp.

In addition, data are being collected showing the areas of swamp land, its probable value for agricultural uses, previous attempts at reclamation, and possibilities and cost of future improvements.

NORTH DAKOTA.—The surveys of the valley of the Red River in North Dakota, begun in 1905, were completed to the international boundary during 1906, and a report and plans have been prepared and submitted to the counties interested which contributed to the expense. The report has also been printed for distribution. This work was done by John T. Stewart, assisted by the deputy State engineer.

Under the direction of this Office tile drains have been laid in the North Dakota Experiment Farm at Fargo. Records of the efficiency of these drains are being kept and reports made. The success of tile drainage in this section, where the ground freezes to a depth of 6 feet, has not been demonstrated, and this experiment is for the purpose of settling the question. This work was in charge of J. T. Stewart.

SOUTH CAROLINA.—A report is being prepared on investigations made during the last year in St. Andrews Parish, near Charleston, to determine best methods of draining farm lands in this parish. The swamps in this parish have not only injured the lands, but furnish breeding places for mosquitoes, making the region very unhealthful. The work is in charge of J. O. Wright, the field work being done by J. W. Martin and Messrs. Eason and Dickenson.

UTAH.—Experiments in the use of drains for the removal of seepage water and alkali have been carried on at various points throughout the State. This work is done in cooperation with the State, which pays half the expense. The experiments are carried on in cooperation with farmers and communities, which furnish all the labor and bear a part of the expense. Drains were put in under such arrangements in 1905 and 1906, and observations of their effect are being continued in 1907. At the same time new experiments are being installed and changes made when drains previously put in have not been entirely successful. The work is in charge of C. F. Brown.

VIRGINIA.—In the spring of 1907 an examination of South River, in Augusta County, was made to make plans for the protection of the bottom lands from overflow. The area subject to overflow is about 1,500 acres, and the estimated cost of the improvements to prevent overflow is $3,750. The work is in charge of S. H. McCrory.

WASHINGTON.—Irrigation in the Moxee Valley, as well as in other sections of Washington, has raised the ground water to such an extent as to kill crops on large areas of improved land. This valley

has been examined and plans for its drainage recommended by S. O. Jayne.

Plans for the protection of the bottom land along the Colville River from overflow were made and submitted to the interested parties. These plans contemplate the improvement of about 30,000 acres. This work was done by L. L. Hidinger, assisted by Mr. Stewart, of Stevens County, Wash.

PUBLICATIONS ON IRRIGATION AND DRAINAGE.

During the year ended June 30, 1907, the following publications, prepared by the Irrigation and Drainage Investigations, were issued:

Bulletin No. 168.—The State Engineer and his Relation to Irrigation. By R. P. Teele, Expert in Irrigation Institutions, Irrigation Investigations, Office of Experiment Stations. Pp. 99, fig. 1.

In the arid region of the United States whatever there is of public control over the use of water in irrigation is centered in the office of State engineer in the various States. This bulletin discusses the whole subject of public control of the use of water, sketching the history of such control in the various States and giving its present status and efficiency.

Bulletin No. 172.—Irrigation in Montana. By Samuel Fortier, assisted by A. P. Stover and J. S. Baker. Pp. 108, figs. 18.

This bulletin is the result of a study of typical sections of Montana, made for the purpose of determining the status and possibilities of irrigation in that State. It covers ditch construction, agricultural practice, ditch management, seepage losses, return seepage, and public control of streams.

Bulletin No. 177.—Evaporation Losses in Irrigation and Water Requirements of Crops. By S. Fortier. Pp. 64, pls. 2, figs. 19.

This contains the results of tank experiments to determine the quantities of water evaporated from soils which receive various cultural treatments and to which the water was applied at different depths; it contains also a few experiments on the quantities of water consumed by plants.

Bulletin No. 179.—Small Reservoirs in Wyoming, Montana, and South Dakota. By F. C. Herrmann. Pp. 100, pls. 8, figs. 13.

This bulletin contains the description of a number of reservoirs which have been built on the plains for storage of storm waters for irrigation and stock water. It describes methods of construction and gives costs and returns from the use of water.

Bulletin No. 181.—Mechanical Tests of Pumping Plants in California. By J. N. Le Conte and C. E. Tait. Pp. 72, figs. 10.

This gives the results of tests of a large number of pumping plants in use for irrigation in southern California.

Bulletin No. 183.—Mechanical Tests of Pumps and Pumping Plants Used for Irrigation and Drainage in Louisiana in 1905. By W. B. Gregory. Pp. 72, figs. 4.

This contains the results of tests of a number of the large pumping plants in use in Louisiana. These are among the largest pumps used for irrigation in the United States, and in general they use crude oil for fuel, making the tests of especial interest on account of these unusual conditions.

Bulletin No. 188.—Irrigation in the Yakima Valley, Washington. By S. O. Jayne. Pp. 89, pls. 2, figs. 4.

This bulletin describes the irrigation works throughout the Yakima Valley, and gives data as to areas watered, crops raised, land values, etc. It also discusses water rights and ditch management.

Farmers' Bulletin No. 263.—Practical Information for Beginners in Irrigation. By S. Fortier. Pp. 40, figs. 25.

This gives suggestions as to the selection of an irrigated farm, the acquirement of a water right, the preparation of land for irrigation, the construction of farm ditches, and the application of water to crops.

Farmers' Bulletin No. 270.—Modern Conveniences for the Farm Home. By Elmina T. Wilson. Pp. 32, figs. 27.

This discusses heating, water supply, and sewage disposal for farm homes, and the arrangement of houses and grounds.

Farmers' Bulletin No. 277.—The Use of Alcohol and Gasoline in Farm Engines. By C. E. Lucke and S. M. Woodward. Pp. 40, figs. 12.

This gives the general results of experiments in the use of alcohol in the ordinary internal-combustion engines on the American market, with some discussion of foreign experiments.

Circular No. 67.—Investigations of Irrigation Practice in Oregon. By A. P. Stover. Pp. 30, figs. 4.

This circular discusses the methods used in irigation in eastern Oregon, and gives suggestions as to improvements.

The following were submitted for publication but not actually printed during the year:

Bulletin No. 189.—Report on the Drainage of the Eastern Parts of Cass, Traill, Grand Forks, Walsh, and Pembina Counties, North Dakota. By John T. Stewart. Pp. 71, pls. 6, figs. 2.

This report gives the results of surveys made for the purpose of locating drainage ditches and determining their size, in the valley of the Red River in North Dakota.

Bulletin No. 190.—Irrigation in Northern Italy. Part II. By Elwood Mead. Pp. 86, pls. 4, figs. 2.

This bulletin discusses the operation of the Italian irrigation laws and the organization and operation of irrigation districts as illustrated by the canals diverting water from the Adda and Adige rivers.

Bulletin No. 191.—Tests of Internal Combustion Engines on Alcohol Fuel. By C. E. Lucke and S. M. Woodward. Pp. 89, pls. 20, figs. 13.

This bulletin gives the details of tests made on eight internal-combustion engines with alcohol, to determine the practicability of using this fuel in the engines now on the American market. It gives fuel consumptions and work done, and discusses the working of the engines with different adjustments of the fuel valves.

Bulletin No. 192.—The Irrigation and Drainage Laws of Italy. Translated by R. P. Teele. Pp. 100.

This bulletin gives the text of the Italian laws on irrigation and drainage.

REPORT OF THE DIRECTOR OF THE OFFICE OF PUBLIC ROADS.

UNITED STATES DEPARTMENT OF AGRICULTURE,
OFFICE OF PUBLIC ROADS,
Washington, D. C., October 14, 1907.

SIR: I have the honor to submit herewith the report of the Office of Public Roads for the fiscal year ended June 30, 1907, together with an outline of the work planned for the current and ensuing years.

Respectfully,

LOGAN WALLER PAGE,
Director.

Hon. JAMES WILSON,
Secretary.

WORK OF THE YEAR.

With an appropriation of $70,000 the Office carried on its rolls during the fiscal year 1907 fifty-three employees, increased the amount of work done in every routine project, inaugurated new projects of importance, and strengthened its cooperative relations with the various State highway commissions, geological surveys, agricultural experiment stations and colleges, as well as with several departments of the National Government.

In this report the progress made during the year in the routine projects of the Office is given in detail, followed by descriptions of new projects and special investigations. The principal routine projects are the construction of object-lesson roads; the testing of road materials; the dissemination of information by means of lectures; the collection and compilation of data relating to road mileage, revenues, and expenditures; instruction in highway engineering; and the dissemination of information through the medium of publications.

During the year 16 object-lesson roads were constructed. This is a smaller number than were constructed during the preceding year, though the actual work done was much greater than has ever been accomplished in any one year since the establishment of the Office when measured by the number of square yards of completed road surface. To the credit of last year should also be placed nearly 5 miles of the Jamestown boulevard, the remainder of the road having been completed during the current fiscal year.

In the testing of road materials there has been an increase of about 6 per cent.

The collection and compilation of data relating to road mileage, revenues, and expenditures for 1904 were completed by the close of the

last fiscal year. This makes available the first reliable census of this character ever completed for the entire United States.

The lecture work of the Office was increased in a marked degree last year in comparison with the preceding fiscal year, and every effort was made to confine the lectures to practical subjects and to intrust this feature of the work to men who are qualified to speak authoritatively by reason of training and experience.

A number of publications of a practical character were issued during the year, which will be referred to in detail in another portion of this report.

The instruction of students in highway engineering, begun in 1904, was continued with increased success during the past fiscal year, and the scope of the project was broadened by the giving of lectures in colleges by engineers of this Office.

In addition to these routine projects the special investigations begun during the preceding fiscal year were continued, and substantial progress was made in connection with the projects relating to the corrosion of iron and the decomposition of rock powders.

The Office continued its cooperative work with the Post-Office Department in the improvement of rural-delivery routes, with the Forest Service in investigating forest roads and trails, with the Geological Survey in the preparation of maps showing classification of roads, with the Navy Department in the construction of a shell road at the New Orleans Naval Station, and with the War Department in experiments with tar as a road-surfacing material.

Two new projects of great importance were begun during the year and promise to be among the largest yet undertaken by the Office. These are: (1) The introduction of model systems of construction, maintenance, and administration of roads in the various counties; (2) the investigation of road materials in the several States. These projects are described in detail elsewhere in the report.

Another project which should have great influence in bringing about the improvement of the public roads was formulated near the close of the fiscal year. This provides for a series of practical articles on road construction and maintenance to be published in county papers throughout the entire United States.

OBJECT-LESSON ROADS.

Object-lesson roads are constructed for the purpose of illustrating proper methods of road building. The local authorities furnish all material, common labor, teams, and fuel; this Office undertaking to supply supervising engineers, and, when practicable, the necessary machinery. In addition to this, tests are made in the laboratory to determine among the materials available the one best suited to a particular road.

WORK OF PAST THREE YEARS.

A comparison of the work done on object-lesson roads during the fiscal years of 1905, 1906, and 1907 establishes the fact that while the number of object-lesson roads constructed during the fiscal year 1907 is not as great as in the preceding year, the number of square yards of road constructed during the past year far exceeds the number in

previous years. It should be stated, however, that an increase of $20,000 in the appropriation was granted by Congress for the past year, and, while only a portion of this increase was devoted to object-lesson road work, it in some measure accounts for the increase. The following table refers to work actually completed in the respective years:

Number of square yards of object-lesson roads constructed during 1905, 1906, and 1907.

Material.	1905.	1906.	1907.
Macadam	44,944	51,246	76,876
Gravel	8,804	4,197	11,722
Shell	5,877	933	0
Earth	0	12,132	27,042
Sand-clay	19,178	19,443	85,571
Burnt-clay	400	0	0
Total	79,203	87,951	200,711

A significant feature of last year's work is the exceptionally large increase in the number of square yards of earth and sand-clay roads. This is due to the fact that macadam roads are in some localities entirely too costly to build, and their construction would be justified neither by traffic conditions nor property values. The Office accordingly endeavors to introduce such forms of construction as are best suited to the means and requirements of the particular community. Of the 16 object-lesson roads built in the last year, 11 were macadam, 2 earth, 1 stone surfaced with gravel, 1 gravel, and 1 sand-clay.

It can easily be understood that wide variations in cost of roads are inevitable owing to differences in cost of labor, amount of excavation, kind of material, and other important factors which enter into the construction of each road. A steady effort has been made, however, to reduce the cost of road construction to the lowest point consistent with the efficiency of the work. The Williamsburg, Va., road may be cited as a conspicuous example of the success of this endeavor. The cost of the macadam section was only 36.3 cents per square yard, or at the rate of $2,556.22 per mile, while the sand-clay section cost 3.08 cents per square yard or $595.09 per mile. This road was constructed entirely by convict labor, and proves that convict labor is of the greatest value in this class of work. The engineering assistance and machinery were furnished by this Office, and are not included in the cost stated above.

ROADS BEGUN DURING FISCAL YEAR 1906 AND COMPLETED DURING FISCAL YEAR 1907.

CHEVY CHASE, MD.—Work was begun resurfacing the old macadam drive on the extension of Connecticut avenue, from the District of Columbia into Maryland, on June 18, 1906, and was completed August 15, 1906. The material used was a granite delivered from an established quarry near the work at a cost of $1.80 per cubic yard, and was placed in three layers as follows: The first course, 3 inches deep, was of stone from 2 to 2½ inches in size; the second, 2 inches deep, was of stone from three-fourths inch to 1¼ inches; and the third course, one-half inch deep, was of stone varying from one-eighth inch

to dust. The whole compacted to a depth of 4 inches. The width of the roadway was 12 feet and, as the drive skirted an electric car line, all the slope was one way. Picks and shovels were used for excavation and all material was spread by hand. Labor cost $1.50 per day and teams $4 per day. Unfortunately, the granite used was too much decomposed to form a permanent wearing surface and it was found advisable to apply a surface dressing of limestone, after the roadway had been opened to traffic for several months. The total cost of the 1,600 square yards thus treated was $739.69, making the cost 46.2 cents per square yard, or $3,254.64 per mile for a roadway 12 feet wide.

Duwamish, Wash.—This is a suburb of Seattle. Work was begun May 3, 1906, and finished September 22, 1906. During this period 6,622 feet of roadway was graded to a width of 24 feet in cuts and 26 feet on fills, and surfaced with a 6-inch layer of macadam 16 feet wide. Besides this there was 175 feet of turn-outs and approaches to bridges surfaced to a width of 14 feet, making a total of 12,044⅘ square yards. The soil varied from a sandy gravel to a hardpan, with a small amount of rock. Heavy excavations were made by blasting, while the lighter work was done with plows and drag scrapers. There was 3,200 cubic yards of earth hauled, with an average haul of 150 feet. The surfacing material was a basalt furnished from a commercial crushing plant near the roadway, at the rate of $1.60 per cubic yard. The amount of this material used was 3,138 cubic yards, spread with an average haul of 1,850 feet. It was placed in three layers: The first course, 5½ inches deep, of stone 1⅜ inches to 2¾ inches in size; the second course, 2¾ inches deep, of stone five-eighths inch to 1⅜ inches in size; and the third course, 1 inch deep, of material ranging from one-half inch to dust. Each course was compacted in turn with a 15-ton roller. The work was done by contract, and the price bid was $1.054 per square yard, making the cost per mile $9,845.73. The total cost of the work, contracted for in a lump sum, was $12,700. This included 400 feet of longitudinal rock drain 4 feet deep, 1,400 feet of one-inch tile drain along low, wet parts, and riprap masonry to protect from washing the fills on the approaches to the bridge. Twelve working days were lost because of rain, and the work was made difficult because of constant hauling over the unfinished roadway.

Salem, Oreg.—Work on this road was begun June 8, 1906, and finished September 19, 1906. A total length of 5,340 feet was graded, of which 2,480 feet was an earth road. The remaining length, 2,860 feet, was macadamized, 1,360 feet being surfaced with macadam to a width of 16 feet and 1,500 feet to a width of 12 feet. The subgrade was prepared with slight excavation (100 cubic yards) on an established roadway which had been graveled at intervals. Three courses of macadam were laid: The first course, 8 inches deep, of 2½-inch stone; the second course, 3 inches deep, of 1½-inch stone; and a 1-inch top course of screenings and dust. The whole was compacted to 9 inches with a 10-ton steam roller. The stone was delivered for 78 cents per cubic yard. From the point of delivery an average haul of 1,400 feet was necessary to place it on the roadway. With labor at $1.80 and teams at $3.60 per day, the total cost of the 4,418 square yards of macadamized roadway was $2,417.49, which makes a cost of

54.7 cents per square yard. At this rate a mile of roadway 12 feet wide would cost $3,846.34, and one 16 feet wide $5,143.26. The cost of the 2,480 feet of earth road was $324.86, which was at a cost of 13.1 cents per running foot, or $691.68 per mile.

AUBURN, NEBR.—This road was completed on July 31, 1906. A detailed report showing dimensions and cost was included in the annual report of the Office for 1906.

ROADS BEGUN AND COMPLETED DURING FISCAL YEAR 1907.

OSWEGO, KANS.—Macadam construction on the roadway leading east from Oswego to Columbus, Kans., was begun on August 25, 1906, and a total length of 4,600 feet was graded. Of this, 2,200 feet was 26 feet wide and 2,400 feet was 29 feet wide. The width surfaced was 10 feet and was placed on one side of the center of the graded portion to allow the roadway to be used as a combination earth and macadam road. The soil was a heavy gumbo, and was excavated with plows and drag scrapers, the material being spread and shaped with a grader. In this manner 2,000 cubic yards of earth was handled, with an average haul of from 125 to 150 feet. The stone used for surfacing was a limestone quarried from ledges near the work. A total of 2,322 tons was placed upon the roadway, with an average haul of 1,675 feet, and was spread with automatic distributing carts and rakes. The surface thus placed was 7 inches deep compacted, and consisted of a foundation course 6 inches thick, a wearing course 3 inches to 4 inches thick before rolling, and a binder consisting of ½-inch to 1-inch screenings and dust. A total of 5,362 square yards was surfaced, at a cost of $4,291.85, giving a rate of 80 cents per square yard, or $4,695.95 per mile of 10-foot roadway.

WILLIAMSBURG, VA.—Two object-lesson roads were built at this point.

Road No. 1.—On January 21, 1907, excavation was begun on the road leading from Williamsburg to Jamestown Island, Va., and work was completed June 29, 1907. During this period but three whole days were lost on account of rain and bad weather. The greater part of the manual labor was done by convicts, their labor being credited at $1 per day. Free labor costs $1.25 and teams $3.50 per day of ten hours. Earth was loosened with plows and was moved with wheelbarrows, carts, drag scrapers, or wagons, according to the length of haul. The maximum haul was 1,200 feet, the average 365 feet. In this manner 9,050 cubic yards of earth was excavated. A total length of 42,200 feet of roadway was graded for a width of 20 feet, giving an area of 93,744 square yards. Of this area 18,173 square yards was surfaced with macadam, and sand-clay construction was adopted for the remainder. The macadam surface was laid in three courses, as follows: A foundation course of granitic gneiss and quartzite 6½ inches deep, uncompacted; next, a wearing course of from 1½ inches to 2½ inches of the same material; followed by a binder course of limestone screenings. The whole was compacted to 6½ inches. The gneiss and quartzite were imported a distance of 80 miles by rail and were placed on the road with an average haul of 4,614 feet from the crusher. The limestone screenings were shipped 250 miles. In all, 4,714 cubic yards of stone was used. The cost of the macadam

road was $6,598.63, giving a rate of 36.3 cents per square yard, or $2,556.22 per mile.

Road No. 2.—The soil and subsoil over the remainder of the road was well adapted to sand-clay construction, as it ranged from a practically pure clay, with sand easily accessible, to a sandy loam. Intermediate portions represented all stages of sand-clay mixtures, and sand or clay was applied to each as became necessary to secure a durable mixture. In this manner 75,571 square yards was treated. The quantities of earth and sand moved are included in the total number of cubic yards given in the description of Road No. 1. The cost of this work was $3,582.78, making a rate of 3.08 cents per square yard, or $595.09 per mile. The total cost of the work was $10,181.41. Of this amount, $4,989.61 represents the cost of convict labor, estimated at $1 per day, leaving the cost of the work to the community $5.191.80. The country adjacent to the road was rolling, and drainage was quite simple. No tiling was required at any point, and the largest cross drain consisted of two lines of 24-inch pipe. The work was accomplished with one crushing plant of 80 cubic yards capacity in ten hours, 1 road grader, 4 drag scrapers, 1 rooter and 2 road plows, a 12-ton roller and a sprinkler.

Benton, La.—Work on this roadway was begun July 10, 1906, and on August 11, 1906, 5,120 feet of earth road, graded to a width ranging from 26 feet to 43 feet, had been completed. Three-fourths of the road lay in a gumbo soil, while the remainder was a sandy clay. This was handled with plows, drag and wheeled scrapers, and was spread and shaped with a grader. There was 4,700 cubic yards of excavation and 19,864 yards of completed roadway. With labor at $1.25 and teams at $3.50 per day, the cost was $1,779.17. The rate per square yard, therefore, would be 8.9 cents, or $1,834.77 per mile of roadway with an average width of 35 feet.

Bozeman, Mont.—Work was begun on an earth road on September 17, 1906, and finished October 8, 1906. During this time 2,640 feet of road was graded to a width of 28 feet, of which a width of 14 feet in the middle was treated with clay taken from a bank near the roadway. The soil was a dark alluvium containing a variable amount of clay, the mixture being too loamy to afford a good road surface. There was 1,208 cubic yards of excavation handled, with an average haul of 170 feet, by means of wheeled and drag scrapers. The surfacing clay was spread with a road machine and compacted with a 6-ton horse roller. The total cost of the work was $375.71. As there was 3,520 square yards surfaced, the rate per square yard was 10.6 cents and $749.42 per mile. This includes the cost of a reinforced concrete culvert 18 feet long, 4 feet 6 inches wide, and 2 feet high in the clear, with appropriate end walls.

Dyersburg, Tenn.—Work was begun on this road August 22, 1906, and completed November 1, 1906. Great delay was caused by the late arrival of the stone and by sixteen days of rain. As a result, the clay subsoil was in a heavy condition. Macadam construction, 23 feet wide, with 5½-foot shoulders on each side, was adopted. Novaculite for surfacing was shipped from Tamms, Ill., at a cost of $1.32 per cubic yard delivered in Dyersburg. As this work consisted in improving a road already established, the cost of excavation was considerably increased because of the fact that much of the

old road surface had to be removed with picks and a rooter plow. Drag and wheeled scrapers were used in handling the excavated material and the roadway was shaped with a grader. A total length of 1,650 feet was graded to a width of 34 feet, while 1,575 feet was surfaced to a depth of 8 inches when compacted. Labor cost $1.25 and teams $3 per day. A total of 4,025 square yards was surfaced at a cost of $2,402.59, making a rate of 59.6 cents per square yard, or $8,054.39 per mile of 23-foot road. The cost of this work, in excess of ordinary rural construction, was further increased by the necessity of lowering water and sewer pipes and properly refilling old trenches.

LENOIR CITY, TENN.—Work was begun on this road November 13, 1906, and was completed May 3, 1907. Out of a total of 88 working days, 8 were lost because of delay in machinery and 56 from rain and inclement weather. As a consequence of the discouraging outlook it was decided to discontinue work until weather conditions should improve. After a break of a month, work was resumed on March 18, 1907, and construction was pushed to a rapid conclusion. The material was a chert gravel from a pit about 3,000 feet from the work. It was placed on the road unscreened, as it came from the quarry, all large particles being broken on the road by hand with a hammer. A 3½-ton horse roller was used and the gravel was rolled dry. A length of 2,000 feet was graded, of which 1,900 feet was surfaced. Of this, 800 feet was 56 feet wide and 1,100 feet 18 feet wide. The chert was placed in three layers; two courses, each 5 inches deep, and a surface course, 1½ inches to 2 inches deep, the whole being compacted to a depth of 9 inches. The total amount used was 2,400 cubic yards. A crown of nine-fourteenths inch per foot was adopted for both sections. There was 2,515 cubic yards of excavation handled, with an average haul of 500 feet. Labor cost $1.25 and teams $3 per day. The total cost of the work, exclusive of labor and material used on 88 feet of 24-inch sewer pipe, was $1,693.55, giving a unit cost of 23.5 cents per square yard. In addition to the loss of time due to rain, the work suffered greatly from the demoralization of labor as a consequence of the many interruptions.

MOUNT GILEAD, N. C.—At this place a combination stone and gravel road was constructed according to the following method: The subgrade was shaped to receive a 5-inch layer of quartzite field stone, hammer broken to 3 inches and less in size. This course was 12 feet wide and was covered with a 6-inch layer of gravel 14 feet wide, so placed that it merged into the earth shoulders. In this manner 1,450 feet was paved with the quartzite and 1,080 feet was completed by surfacing with gravel. The cost of the finished section was $151.35, giving a cost of 9 cents per square yard. The total cost of the work was $205.75. The material used consisted of 230 cubic yards of stone and 190 cubic yards of gravel. Labor cost 80 cents per day of ten hours and teams $2 per day. The stone and gravel were donated. No excavation was necessary, and the cost of the work was further reduced by the fact that the original road was well drained by ample side ditches. The gravel consisted of 65 per cent of quartzite and 35 per cent of clay, and was compacted by traffic, no roller being available. This work was done in five days, beginning August 13, 1906, and the road was left to the community to complete.

OCCOQUAN, VA.—Work was begun on this road August 21, 1906, and completed September 15, 1906. Five days were lost on account of rain, and the cost of the work was increased by the heavy condition of the roadway at the time of excavation. A total length of 2,850 feet was graded, of which 1,580 was covered with gravel. This was so placed that it should be 9 inches deep at the center and 6 inches deep at the sides when compacted. The road was 15 feet wide in one section and 16 feet wide in the other. The gravel was donated from a pit within 300 feet of one end of the work. Labor cost $1.50 and 2-horse teams $3 per day. The area surfaced was 2,842 square yards, at a cost of 21.1 cents per square yard, making the cost per mile $2,009.27. The machinery used consisted of drag scrapers, breaking and rooter plows, a road machine, and a 3½-ton horse roller. The soil varied from a hard mixture of clay and gravel to a sandy gravel and a soft heavy clay. Two terra-cotta culverts were necessary, their face walls being made of rubble masonry. The total cost of the work was $601.26, and there remained 365 linear feet to be surfaced with gravel, which the community undertook to do without Government supervision.

PENDLETON, OREG.—Work was begun September 27, 1906, and completed November 19, 1906. During this time a length of 2,300 feet was surfaced to a width of 14 feet and to a depth of 9 inches compacted. The width graded was 25 feet. The soil over which the roadway was built was a light, loose volcanic ash, easily moved by the wind. There was slight excavation made, only 200 cubic yards of earth having been moved over an average haul of 150 feet. The surfacing material was a heavy basalt, quarried from a ledge of rock an average distance of 1,500 feet from the roadway, and was crushed to three sizes: (1) One inch to 2½ inches; (2) one-half inch to 1 inch; and (3) 1 inch to dust. This was placed in three layers of 9 inches, 3 inches, and 1 inch, respectively. A 14-ton roller was used in compacting the subgrade and the stone. Labor cost $2 per day and teams $4.20 per day. The cost of the roadway was $2,892.82, giving a cost of 80.9 cents per square yard, or $6,640.91 per mile of 14-foot road. One feature of the roadway worthy of special mention is that throughout the greater part of its length it is below the surface of the surrounding land. This is necessary to protect the roadway from the scouring action of the wind, which carries away the light, loose ash and leaves the stone unprotected. In this instance the roadway had been worn below the surface of the surrounding country, so that grading to secure this protection was unnecessary.

ANNISTON, ALA.—Actual construction was begun on this macadam road May 14, 1906, and the work was completed August 4, 1906. The soil ranged from a sandy clay to a chert-clay mixture and to a solid chert. As a consequence, excavation was difficult and picks were used in a large part of the work. There was approximately 6,600 cubic yards of excavation handled in drag and wheeled scrapers and wagons over an average haul of 300 feet. The limestone already crushed for surfacing was shipped to Anniston by rail at a cost of $1.12 per cubic yard. The average haul from the railway siding to the roadway was three-fourths of a mile. The total amount of material used was 752 cubic yards, placed in the following manner: The *first* course, 5 inches deep, of stone ranging from 1¼ inches to 2½

inches in size; the second course, 2 inches deep, of stone from three-fourths inch to 1½ inches in size, and a surface dressing of screenings and dust. The whole was compacted to a depth of 6 inches by means of a 10-ton roller. The area surfaced was 4,141 square yards. The total cost was $2,889.85, or 69.8 cents per square yard. This makes the rate per mile $5,731.94 for a 14-foot roadway. At the time of construction labor cost $1.25 and teams $3.50 per day.

WASHINGTON, D. C.—Work was begun on the driveway in the grounds of the Department of Agriculture on August 16, 1906. There were 72 working days, 9 of which were lost because of rain and 10 because of nondelivery of stone. The total length of road surfaced was 2,630 feet. The width of surfaced road was 16 feet, and the depth of surfacing material 6 inches before rolling. The amount of stone used was 1,240 tons, which was delivered on the work at a cost of $1.89 per ton. The first and second courses, 3½ inches deep and 1¾ inches deep, respectively, were of trap rock, and the binder course was of limestone screenings. This was compacted to 4 inches with a 12-ton roller. The work consisted in grading and resurfacing an old gravel drive. About 400 cubic yards of excavation was necessary to readjust grades, all of which had to be done with pick and shovel after loosening the earth with a spiked roller. Drainage was provided for by a series of drop inlets and catch basins connected with the city sewer system. Labor and teams cost $1.50 and $4 per day, respectively, and expert labor on catch basins $6 per day. This work was done at a total cost of $3,301.25. As there were 4,676 square yards surfaced, the rate per square yard was 70.6 cents, and that per mile $6,628.31 of 16-foot roadway. On rural construction under similar conditions this rate per mile would have been considerably reduced by eliminating the elaborate drainage system, which consisted of one drop inlet and one catch basin with connections to each 525 feet of roadway. The cost of construction was further increased by the irregular delivery of stone, resulting in much loss of labor.

ROADS IN COURSE OF CONSTRUCTION AT CLOSE OF FISCAL YEAR 1907.

HARTINGTON, NEBR.—A small force of men began ditching for tile drains May 27, 1907, to prepare the roadway for the arrival of the machinery, when work could be actively pushed. About 2,000 feet of gravel roadway is to be constructed and work was well under way at the close of the fiscal year. A complete report will appear in the annual report for 1908.

NEW ORLEANS, LA.—This work consisted in the construction of a shell drive around the United States naval station to replace a driveway which was closed because of improvements about the station. Work began on November 24, 1906, and continued beyond the close of the fiscal year. The total length of road surfaced was 8,915 linear feet, making a roadway equal in length to three average object-lesson roads. A complete account of this work will appear in the next annual report.

NORFOLK, VA.—This work consisted in building 3¼ miles of macadam and 3 9/16 miles of earth road leading from Norfolk, Va., to the site of the Jamestown Exposition. Excavation was begun De-

cember 6, 1906. At the close of the fiscal year all excavation had been completed, 4 miles of earth road were open to traffic, and 1¼ miles surfaced with macadam. As this work extended beyond the close of the fiscal year, it will be fully reviewed in the next annual report.

PAINTSVILLE, KY.—The work at this point consists in the improvement of 5,780 feet of macadam roadway. As this road was not completed by July 1, 1907, a final statement will appear in the annual report for 1908.

PINE BLUFF, ARK.—Grading was begun on the roadway leading south from Pine Bluff to Star City on May 27, 1907. This roadway leads through a level section of country, the soil being a light sandy alluvium. The total amount graded was 2,700 feet and the subgrade was shaped to receive a 16-foot surfacing of macadam. As this work was not completed by the close of the fiscal year, it will be fully described in the annual report for 1908.

INSTRUCTION IN HIGHWAY ENGINEERING.

Six engineer students were appointed during the last fiscal year, of whom three have completed their first year and have been appointed junior assistant engineers, and three have resigned to accept employment outside of the service. The engineer students have, with very few exceptions, developed into skilled highway engineers, and have rendered such efficient service as to demonstrate clearly the wisdom of this plan of instruction. One young man who entered the service as engineer student in August, 1904, at $50 per month has recently received an important position outside of the Government service as highway engineer at $4,000 per annum. Since the establishment of this branch of the work in 1904 fifteen engineer students have been appointed.

At the beginning of the current fiscal year five engineer students were appointed, the appropriation being so small as to limit materially the scope of this work.

By reason of the large territory over which the operations of this Office extend it has been practicable to give the engineer students, during their one-year graduate course, practical training in road construction under widely varying conditions of climate, topography, character of soil, and materials. As a result of this instruction it is probable that when these young men accept positions outside of the Government service they will be competent to do any highway work which they may be called upon to perform.

Last year first steps were taken to put into effect the plan of giving lectures on highway engineering in schools and colleges. Two lectures were given at Purdue University in March, and arrangements were made for lectures at Columbia University and West Virginia University during the session of 1907–8. These lectures are in addition to the cooperation which this Office extends to summer road schools held in connection with some of the agricultural colleges.

LABORATORY TESTS AND ANALYSES.

This work has been continued along established lines, and closer cooperation has been secured with the various State highway com-

missions and geological surveys. The State geologists of Maryland, Massachusetts, Montana, and New Jersey, the highway commissions of Connecticut, Massachusetts, Minnesota, Ohio, Pennsylvania, Rhode Island, and Virginia forwarded samples of road materials to be tested in the laboratory of this Office. The number received from these sources was about 20 per cent of the total number received during the year. The State geologist of Indiana made an investigation of the road materials in that State and incorporated in his report the results of tests made in this laboratory of samples of road material submitted from all parts of the State. It will thus be seen that the work of our laboratory forms an important element in the State geologist's report on the road building resources of Indiana. A very large number of samples has been received from Pennsylvania, 23 per cent of the total number received during the fiscal year having been submitted from that State.

The routine tests consist of a petrographic or a chemical analysis of the sample to determine its composition and proper classification, and physical tests to determine, respectively, the cementing value, hardness, toughness, and resistance to wear, water absorption, and specific gravity.

During the year, 405 samples of material were tested as compared with 384 for the preceding year, showing an increase of 5½ per cent. Materials were received from 41 States, Canada, and England. Since the beginning of the present fiscal year, however, this work has increased considerably, there having been received between July 1 and September 15, 140 samples. The character of some of the materials received last year and the geographical distribution are as follows:

Trap rock.—California, 5; Canada, 1; England, 1; Maine, 1; Massachusetts, 3; New Hampshire, 2; New Jersey, 19; New York, 2; Oregon, 4; Pennsylvania, 9; Virginia, 5; Washington, 1. Total, 53.

Limestone.—California, 1; Indiana, 10; Kansas, 1; Michigan, 6; Missouri, 2; New York, 4; Ohio, 10; Pennsylvania, 31; South Carolina, 2; Tennessee, 1; Texas, 1; Utah, 3; Vermont, 2; Virginia, 5; West Virginia, 2; unidentified, 1. Total, 82.

Granite.—California, 3; District of Columbia, 3; Indiana, 2; Maine, 3; Massachusetts, 1; Michigan, 1; New Hampshire, 2; New York, 1; North Carolina, 1; Pennsylvania, 6; South Carolina, 1; South Dakota, 1; Texas, 1; Virginia, 7; Washington, 1. Total, 34.

Schist.—Delaware, 2; District of Columbia, 3; Maryland, 1; Massachusetts, 1; New Hampshire, 1; New York, 3; North Carolina, 3; Pennsylvania, 5; Rhode Island, 3; Virginia, 11. Total, 33.

Miscellaneous.—There were also tested 203 samples of birch blocks, brick, cement, chert, clay, conglomerate, gravel, marl, oil, quartz, quartzite, sand, sandstone, tar, tile, asphalt felt, and ashes.

The grand total of all samples was 405.

LECTURES, ADDRESSES, AND PAPERS.

The demands upon the Office for lectures and papers during the past year indicate the widespread interest which is now being manifested in the improvement of the public roads. Papers have been read and addresses have been delivered before such organizations as the American Society for Testing Materials, the American Road Makers' Association, State associations of county commissioners and rural letter carriers, State farmers' institutes, associations of commercial clubs, chambers of commerce, summer road schools, and

various colleges, in addition to lectures before popular meetings. Great care has been taken to confine all lectures and papers to practical subjects, and the giving in all cases of results and advice based upon actual experience and investigation.

In May, 1907, the Office participated in a cooperative lecture tour through the Sixth Alabama district. The lecture party was designed to represent the various bureaus of the Department of Agriculture, qualified to give information and advice upon all points of special interest to the people of this district. The success of the plan was assured from the first because of the unique character of the undertaking, its comprehensiveness, the thorough manner in which the entire district was covered, and the economy made possible by the concentration of interests of the party and the relatively large number of lectures delivered within the given period.

The following is a summary of the work done in this direction during the fiscal year 1907:

ALABAMA.—Birmingham, October 17, 1906: Lecture on county road administration before the State Good Roads Association. Athens, May 20, 1907: Lecture on road improvement to Limestone County Good Roads Club. Sixth Congressional district: Lecture tour began May 5 and continued until May 18, 1907, one lecture being delivered in each county of the district.

ARKANSAS.—A road improvement and drainage tour was conducted by this Office and the Office of Experiment Stations along the lines of the Missouri Pacific Railway in southern Arkansas and northern Louisiana, in cooperation with the Missouri Pacific Railway Company. Lectures on road construction and maintenance with special reference to earth roads were delivered at the following places: Wynne, January 28; Forest City, January 29; Helena, January 29–30; McGehee, January 31; Arkansas City, January 31; Dermott, February 7; Dumas, February 8; Pine Bluff, February 8–9; Little Rock, February 10–11, address to members of legislature on road legislation, in addition to the regular lecture; Paragould, February 12; Nettleton, February 13; Newport, February 14.

CALIFORNIA.—Los Angeles, January 18, 1907, address before the Chamber of Commerce; Pasadena, January 19; San Diego, January 22: Subject, "Improvement in local methods of road construction and maintenance."

COLORADO.—Denver, December 4, 1906, lecture on road legislation and road construction, and informal talks to State Good Roads Association.

CONNECTICUT.—Woodstock, August 29, 1906, lecture on work of Department of Agriculture and Office of Public Roads to Pomona Grange of Windham County.

DELAWARE.—Dover, February 6, 1907, paper read before Century Club on betterment of public roads and address before State legislature.

KANSAS.—Manhattan, January 1, 2, 3, 4, and 5, 1907, lectures on the economics of road construction and the necessary State legislation, under the auspices of the State agricultural college and the State Good Roads Association. Lectures on the construction of

permanent roads at the following places: Alma, December 3; Lyndon, December 4; Cottonwood Falls, December 5; Marion, December 6; Sedan, December 10; Independence, December 11; Oswego, December 12; Pittsburg, December 13; Osawatomie, December 14; Springhill, December 15—all in 1906.

KENTUCKY.—Winchester, October 9, 1906: Lecture on road economics, to Fifth Kentucky State Development Convention. Shelbyville, February 27, 1907: Address on road construction and maintenance at the State Farmers' Institute.

INDIANA.—Lafayette, March 25 and 26, 1907: Lectures on the work of the Office of Public Roads and opportunities in highway engineering, and on macadam and earth road construction to sophomore and senior classes in civil engineering of Purdue University.

LOUISIANA.—Road improvement and drainage tour in cooperation with the Missouri Pacific Railway and the Office of Experiment Stations. Meetings were addressed at the following places: Lake Providence, February 1–2, 1907; Tallulah, February 2; St. Joseph, February 3–4; Ferriday, February 5; Rayville, February 5; Collinston, February 5; Monroe, February 6.

MAINE.—Saco, May 17, 1907: Lecture on road economics, at citizens' mass meeting.

MARYLAND.—Chillum, July 26, 1906: Lecture on preparation and use of concrete, to Montgomery County Grange. Dorsey Station, April 4, 1907: Address on subject, "Necessity for progressive policy in road improvement," at general meeting of taxpayers.

MASSACHUSETTS.—Boston, October 26, 1906: Lecture on decomposition of the feldspars, before the American Chemical Society. Boston, December 18, 1906: Lecture on destruction of highways by automobiles before the Rural Club of Boston.

MISSISSIPPI.—Forest, March 19, 1907: Three lectures, on "Earth road construction," "Maintenance," "Civic improvement," before popular assemblages, under auspices of Business Men's League.

MISSOURI.—Conception, August 18–19, 1906: Two talks, with advice on drainage, improving earth roads, permanent sluices, and culverts, before county road officials. Chillicothe, September 7, 1906: Lecture on road economics, before Tri-State Road Convention. Jefferson City, January 15, 1907: Address on State aid and State organization before Missouri legislature and State Good Roads Convention.

NEBRASKA.—Lincoln, February 11, 1907: Lecture on "Road legislation and organization," before Nebraska State Association of Commercial Clubs. Fremont, April 14–17, 1907: Advice on road improvement, with special reference to macadam construction, to the Commercial Club and city council.

NEW YORK.—New York City, December 28, 1906: Lecture on air separation of fine powders, before American Association for the Advancement of Science.

PENNSYLVANIA.—Pittsburg, March 12–14, 1907: Paper on the work of the Office of Public Roads, before American Road Makers'

Association. Philadelphia, May 2, 1907: A representative attended meeting of American Electrochemical Society.

VIRGINIA.—Roanoke, July 11, 1906: Lecture on road construction and economics, before State Farmers' Institute. Amherst C. H., July 31, 1906: Lecture before popular assemblage, on "Economics of road construction." Herndon, February 13, 1907: Informal talk on road improvement at citizens' mass meeting. Rocky Mount, February 16, 1907: Talk and general discussion on earth and gravel road construction and maintenance, at mass meeting. Charlottesville, April 16, 1907: Informal talk on road improvement, to county supervisors and private citizens.

WASHINGTON.—North Yakima, November 8, 9, 10, 1906: Lecture and informal talks on modern methods of road construction, before State Good Roads Association. November 11 to December 4, series of lectures in different cities and towns on Puget Sound on construction and maintenance of improved roads and the benefits derived from them. Tacoma, December 4: Lecture on road improvement. January 24 to April 27, 1907: Tour of the entire State of Washington was made. During a portion of this time the governor of the State and prominent citizens and officials accompanied the party and addressed the various meetings. Lectures were given on practical road construction and maintenance, based upon the careful investigation of conditions, materials, and methods in each locality. In connection with this tour the State legislature met in joint session to hear a lecture on road improvement. This resulted in the passage of a law by the legislature which placed the road work of the State on a much more practical basis than had been possible under the former legislation, and stimulated in a marked degree progress throughout the State.

SPECIAL ADVICE AND INSPECTION.

Occupying an intermediate stage between the lecture work and the object-lesson method of instruction is a project which covers all cases where advice of a special character is required. This advice may have to do with proper methods of quarrying, excavating, the location and grade of roads, the selection of materials, the organization of working forces, systems of reporting work, or with actual construction of roads. Included under this head is also the assignment of engineers and experts to confer with State and county officials regarding plans of cooperation, proposed experiments, and inspection of work. About forty such assignments were made during the fiscal year in the States of Alabama, Kentucky, Maine, Maryland, Massachusetts, North Carolina, New York, New Hampshire, Rhode Island, Tennessee, Virginia, Vermont, Washington, and West Virginia.

Pike County, Ala., is probably the best example of definite results following work under this project. In the fall of 1904 that county was about to issue bonds for the construction of macadam roads. The detail of an expert to confer with the county officials on the subject was requested from this Office, and upon his advice the amount of the proposed bond issue was reduced and the sand-clay method of construction was substituted for macadam. He made a careful examination of the local materials available and demonstrated the method which should be followed in the construction of sand-clay roads, and

made recommendations for a county system. A recent investigation in Pike County shows that there are 118 miles of improved sand-clay roads, which, for all practical purposes, are almost equal to roads costing five times as much. Hard, smooth roads have replaced the deep sand roads, and the total cost of the 118 miles was only $22,000.

ROAD MILEAGE, REVENUES, AND EXPENDITURES IN 1904.

The close of the fiscal year marked the completion of the first census of road mileage, revenues, and expenditures ever undertaken for the entire United States. During this investigation over 60,000 letters were sent out and reports were received from every county in the United States. In many of the States the investigation extended to each individual township. The complete report shows a mileage of over two million, an annual expenditure of nearly $80,000,000, and a percentage of improved roads of only 7.14 per cent. The results of the investigation have been published in a series of circulars, by States, and have been digested in a bulletin.

The investigation has developed the significant fact that in States where the old statute-labor system prevails very little progress, if any, is being made in the permanent improvement of the public roads, while in States which are depending upon cash taxes progress is relatively great. As between States having State aid and those working entirely by the county or township system, progress, as judged by results, is much greater in the former.

This investigation also proves that the mileage of roads in the United States is so immense and the improvement so slight that no matter how great our progress in the building of hard roads, earth roads will continue for many years to constitute by far the largest percentage of our highways. It is clear, therefore, that the maintenance and improvement of earth roads is of vital importance.

INSPECTION OF RURAL-DELIVERY ROADS.

The Fourth Assistant Postmaster-General, from time to time, forwards to this Office a list of rural-route roads which are in bad condition. Application forms and information concerning the assistance which may be secured from this Office are then sent to the postmasters having in charge these particular routes, and when the application form is received at this Office, duly made out and signed, engineers or experts are detailed to give advice and assistance necessary to enable local authorities to improve the roads to meet the requirements of the postal service. During the past year such inspection and advice were given at the following places:

ARKANSAS.—Fort Smith, June 12, 1906.

INDIANA.—Huntertown, March 28, 1907; Mount Vernon, April 22 to May 8, 1907; New Harmony, April 16–19, 1907; Portland, November 7, 1906; Sandborn, April 9, 1907.

IOWA.—Murray, November 3, 1906.

KANSAS.—Oswego, November 28, 1906.

MINNESOTA.—Echo, October 29, 1906; Forest Lake, October 26, 1906; Hewitt, October 24, 1906.

MISSISSIPPI.—Booneville, March 23 to April 2, 1907; Gattman, April 4, 1907; Silver Springs, April 6, 1907.

OHIO.—Butler, April 23, 1907; Chardon, March 28–29, 1907.

TENNESSEE.—Bunker Hill, March 21, 1907; Newbern, April 9, 1907.

As an indication of the effectiveness of this plan the following may be quoted from a report of the postmaster at Oswego, Kans.:

After hearing from township officers, whose duty it was to carry out promises for the betterment of roads mentioned by you, namely, R. F. D. No. 3, from this town, as far as I have learned, I can say that all the improvements have been made, and there seems a growing disposition to keep the public roads in better condition than formerly.

STANDARDIZATION OF TESTS.

During the year progress was made in the design of special equipment for conducting road-material tests. The most important addition to such equipment was a new impact machine for testing the toughness of road-building rocks.

In July, 1906, specifications developed in this Office for determining the toughness of rocks for road building were submitted to the American Society for Testing Materials and adopted by that society.

CLASSIFICATION OF ROAD MATERIALS.

In the laboratory of the Office a definite stage was reached in the important project of the classification of road materials and the correlation of their physical properties and mineral composition, the results of this investigation having been embodied in a bulletin which has recently been issued.

This investigation, which has been continued during a number of years, seems to have established the fact that there is a relation between the mineral composition of rocks and their physical properties. Some of the important points brought out by this investigation are that the igneous and metamorphic rocks containing a preponderance of siliceous minerals and a high degree of crystallization offer a greater resistance to abrasion than most of the varieties of sedimentary rocks, and that coarse-grained intrusive rocks of the igneous class are harder, but break more readily under the impact of traffic than the finer-grained volcanic variety of like mineral composition. The fact has been also demonstrated that the cementing value of rocks is to a certain extent measured by the abundance of secondary minerals resulting from rock decay.

DUST PREVENTIVES.

The necessity for the treatment of macadam roads so as to enable them to resist the destructive action caused by the general use of motor vehicles has become increasingly apparent within the last few years. In England and France this subject has received earlier and more thorough consideration than in this country, and greater progress along certain lines has been made. This Office has endeavored, during the past year, to secure full and complete information relating to dust preventives in foreign countries, including methods of application and apparatus used. Two special agents of this Office were assigned to investigate and report on this subject in France and England. Reports have been made on these investigations and will form part of a bulletin on dust preventives. In addition to this, careful search was made in various libraries, periodicals,

records of scientific societies, and Government publications to secure a complete reference list of all that has been written on the subject.

Arrangements were made during the latter part of the fiscal year for a series of experiments in Massachusetts with dust preventives in cooperation with the State highway commission. These experiments were begun and completed during the early part of the current fiscal year. Another series of experiments with crude oil, asphaltoilene, and rock asphalt were conducted at Bowling Green, Ky., the arrangements having been made in June, and the work actually carried on during the current fiscal year. Samples of all crude materials and special preparations now in use in this country as dust preventives were analyzed and tested in the laboratory of this Office. This feature of the work affords a valuable basis for further experiments.

COOPERATION WITH THE FOREST SERVICE.

In accordance with the plan of cooperation entered into with the Forest Service, as stated in the last annual report, an engineer from this Office was assigned to make a thorough investigation of the roads and trails in the Yellowstone Forest Reserve. The work continued from August 17 to October 14, 1906, and a report containing estimates and recommendations for the improvement and maintenance of forest roads and trails was submitted to the Forester. No additional work of this character was undertaken during the year.

NEW PROJECTS.

INVESTIGATION OF ROAD MATERIALS IN THE SEVERAL STATES.

The small appropriation for the work of this Office has heretofore prevented the formation of plans for a thorough and detailed investigation of the road materials in each of the several States. The vast area requiring personal inspection makes the problem one of great magnitude, but after careful consideration it was decided to inaugurate a plan whereby the investigation in a State could be undertaken and extended in cooperation with State highway commissions and State geologists. The first State selected under this project was Minnesota.

In January, 1907, a special agent of this Office began work in that State under instructions to ascertain the location, character, quantity, and quality of all the road materials in Minnesota; to secure all practicable information relative to quarrying, transportation by team, by rail, and by water, probable cost, possible and probable markets, and feasibility of employing convict labor in quarrying and preparation of material; to obtain all other information pertinent to the subject; and to submit recommendations. The investigation was well under way at the close of the fiscal year and will form the basis for a circular to be issued during the current fiscal year.

INTRODUCTION OF MODEL SYSTEMS OF ROAD CONSTRUCTION, MAINTENANCE, AND ADMINISTRATION.

Few counties in the United States are conducting their road work in accordance with any preconceived plan or system and with a full

knowledge of the road-building resources and requirements of the county. There are many factors that enter into the road work of a county, among which may be mentioned administration of road revenues, methods of construction and maintenance, character of materials used, and distribution of improvements. A plan has been originated under which the engineers qualified by exceptional ability and experience are assigned upon request of the authorities of a county to make a thorough investigation of every factor entering into the road work of the county, and to draw up a comprehensive and detailed report containing plans for a complete road system providing for the proper classification of the roads, indicating the character, cost, and relative importance of the improvements recommended for each particular road, and pointing out location and relative value of available road-building materials, or making recommendations for the importation of materials from outside sources, the report also containing recommendations for the most effective administration of the road revenues under existing laws.

COOPERATION WITH NEWSPAPERS IN DISSEMINATING PRACTICAL INFORMATION ON ROAD CONSTRUCTION AND MAINTENANCE.

It is apparent that the widest distribution of bulletins and the most comprehensive plan for lectures will fall far short of reaching the attention of the great majority of people in remote country districts. On the other hand, there is practically no section of country in which newspapers do not circulate. It was thought that by enlisting the newspapers in each county in the United States in a cooperative scheme to educate the people in ways and means to improve the public roads, results of a most beneficial nature would be achieved. Articles of from 500 to 1,000 words containing practical information and advice will be prepared by experts of this Office and sent out to newspapers about once a month. In connection with these articles a question column will be conducted in each paper, the object being to ascertain and remedy local difficulties.

Circular letters were sent out just before the close of the fiscal year and the numerous replies of a uniformly favorable character have assured the practical success of the undertaking.

SPECIAL INVESTIGATIONS.

THE CORROSION OF IRON.

I desire particularly to call your attention to the investigation of the corrosion of iron which has been conducted by Dr. A. S. Cushman, Assistant Director of this Office. The results of his investigation clearly demonstrate the fact that the generally accepted theories regarding the oxidation of iron are incorrect. In fact he shows that, by the direct coating of iron with oxygen gas, rusting or oxidation is inhibited. He has demonstrated that by treating the surface of iron with a strong oxidizing agent, such as potassium chromate, the rusting can be prevented so long as the oxidizing agent is present. It can readily be seen that this discovery is of the greatest importance, especially in protecting steam boilers from corrosion. I not *only* emphasize this very important investigation because of its

value, but also on account of the fact that the men engaged in scientific work for the Government in this Department are unable to derive the pecuniary benefits which almost invariably accompany such results in the commercial world. I therefore think that all possible recognition should be given to the work of such men.

This investigation has already led to an effort on the part of several of the leading manufacturers to supply a metal which shall be highly resistant to corrosion. The development of a sheet-iron culvert which shall be at the same time strong, light, and resistant to corrosion will be of great assistance to road builders. As a direct result of these investigations it is now possible to write specifications for iron and steel which are known to have a much greater lasting character than the ordinary steels which have been supplied by the markets for a number of years past. The investigation of the corrosion of iron has also led to suggestions for future experiments which promise to be of the highest value in the commercial development of the country.

THE DECOMPOSITION OF ROCK UNDER THE ACTION OF WATER.

The study of the decomposing action of water on finely ground rocks, conducted by Doctor Cushman, has also led to valuable practical results. The fact has been developed that it is possible in road building to obtain a better bonded surface by mixing rocks, such as limestones, with the more siliceous crystalline rocks. This fact has been taken up in practice, and roads have been constructed according to this method, especially in Pennsylvania, which have been found more efficient than roads built of either material alone. The studies of these decompositions have also developed a method for extracting the valuable material, potash, from feldspathic rock, and there seems to be every reason to believe that eventually at least a portion of our potash supply will be obtained in this country. As one result of this investigation, which has been continued for some years past, the board of water supply in New York City has carried on certain investigations involving the principles set forth in several bulletins published by this Office, and has thereby been enabled to make cement-concrete mixtures which are more impervious to water than any that have been heretofore used. There are already in hand data that have not yet been published which will serve to substantiate the principles already discovered, and it is intended during the coming fiscal year to continue these investigations to their probable conclusion.

PUBLICATIONS.

The demand for Bulletin No. 29, on macadam construction, which was published during the year, has proved the need of the public for a short concise treatise on this subject. This publication gives the best practice in macadam road construction, and contains serviceable illustrations, tables of cost data, and specifications.

While it would, of course, be desirable to have systems of hard roads throughout the country, in many sections where hard materials are scarce and expensive this ideal condition is impossible. The earth road will necessarily be the only road obtainable in these communities for many years to come, and, indeed, this kind of road,

if properly maintained, is fairly satisfactory. The people of these sections, therefore, should have information readily available in regard to the care and maintenance of earth roads. A farmers' bulletin will be issued soon upon this subject, in which the use of the split-log drag will be discussed. Sand and clay are being used more and more as road-surfacing materials, and a farmers' bulletin will shortly be issued which will contain much of the data in Bulletin No. 27 of this Office, published in 1906, and which will make possible the wide dissemination of information regarding the proper mixture of these materials for road construction.

Investigations into the causes which underlie the corrosion of iron and steel have been carried on from time to time in the Office. The first report upon these investigations was published as Farmers' Bulletin No. 239, in 1905. Later data have recently been published in Bulletin No. 30 of this Office.

Confusion exists in the terminology and classification of road-building rocks, and in Bulletin No. 31 a classification has been proposed in which road rocks have been graded into classes, types, families, and subfamilies. The mineral components of rocks are discussed in this bulletin, and facts of importance are given regarding the relation of the physical properties of rocks to their mineral composition and structure.

The results of studies upon the decomposition of the feldspars were published in Bulletin No. 28. Information of importance in connection with the selection and mixing of rocks in the surface treatment of macadam roads is given in this bulletin. A review of all experiments which have been made up to the present time upon the use of ground feldspathic rocks as fertilizers in place of potash salts, including experiments conducted in the Department, was published in Bulletin No. 104 of the Bureau of Plant Industry by the Assistant Director as collaborator with that Bureau.

The series of circulars giving mileage of improved and unimproved roads and the expenditure of road funds in every county in the United States has been completed. A bulletin combining the results of the whole investigation and making deductions therefrom has recently been issued as Bulletin No. 32 of the Office.

CLASSIFIED EXPENDITURES FOR 1907, BY PROJECTS.

Expenditures for fiscal year ended June 30, 1907, by projects.

Appropriations:		
Salaries, Office of Public Roads		$12,340.00
"Public Road Inquiries"		57,660.00
Total appropriation		70,000.00
Projects:		
1. Object-lesson roads	$19,995.07	
2. Instruction in highway engineering	4,793.38	
3. Testing road materials	4,872.34	
4. Road mileage, revenues, and expenditures in 1904	4,435.61	
5. Lectures	3,656.53	
6. Special advice and inspection	2,198.68	
7. Investigation of dust preventives	1,790.41	
8. Inspection of rural-delivery routes in cooperation with the Post-Office Department	969.86	
9. Decomposition of rock powders	1,108.33	

Projects—Continued.		
10. Corrosion of iron and steel	$816.23	
11. Investigation of forest roads and trails in cooperation with the Forest Service	810.52	
12. Introduction of model systems of construction, maintenance, and administration	412.08	
13. Classification of road materials	600.00	
14. Tests of concrete and cement	278.00	
15. Standardization of tests	396.67	
16. Investigation of road materials in Northwestern States	130.70	
17. Bibliography	220.55	
18. History of road building	344.00	
19. Bulletin, Macadam Roads	169.85	
20. Split-log drag	292.80	
21. Digest of road laws	150.00	
22. Cooperation with the Geological Survey	30.00	
23. Executive and administrative	3,481.67	
24. Routine office work	5,272.24	
25. Permanent equipment	7,700.00	
26. Editorial and library	1,200.00	
27. Machine shop	800.00	
28. Quarters	2,744.97	
Total expenditures		$69,670.49
Balances unused:		
Statutory roll	86.00	
Miscellaneous, approximate	243.51	
		329.51

OUTLINE OF PLANS FOR THE CURRENT YEAR.

Object-lesson road work is well under way in the States of Virginia, West Virginia, Kentucky, Tennessee, Mississippi, Louisiana, Arkansas, Missouri, Wisconsin, North Dakota, South Dakota, and California, and according to the present outlook the most satisfactory results may be expected. For this year's work the Office has available 6 steam rollers, 3 secured by purchase and 3 by lease. Unfortunately, however, it is necessary to borrow from manufacturers the remainder of the machinery used in object-lesson road work.

There was an unprecedented increase in the routine testing of road materials about the beginning of the current fiscal year, 140 samples having been received during the first two and a half months of the year as compared with a total of 405 for the entire fiscal year 1907. It has been necessary to employ an assistant temporarily, and every effort will be made to meet the growing demand for this class of work. At the same time work will be continued looking to the improvement of testing apparatus and the standardization of tests. The special investigations with reference to the substitution of slag for crushed rock in the manufacture of concrete will be continued in the hope of obtaining accurate and valuable data.

Only five engineer students were appointed at the beginning of the current fiscal year owing to the limited appropriation available for this work, but the plans outlined for further operations during the year indicate that these students will receive a most thorough training in every phase of highway work. An examination will be held in the spring of 1908 to secure additional eligibles for appointment to the position of engineer student. In connection with

this project, lectures will be delivered in colleges, and it is hoped by the close of the year to have a definite schedule so as to place this feature of the work on a basis commensurate with its importance.

It seems probable that the demands for practical lectures on road construction and maintenance will be greater during this year than in any year since the establishment of the Office. Already a number of Congressional districts have been thoroughly traversed by lecture parties from the Department of Agriculture in company with Members of Congress, and it is evident that good results will follow these tours. The most careful effort is being made in all cases to confine the lectures in the country districts to practical advice on local problems so as to insure beneficial results.

The rapid increase in road building throughout the country carries with it a corresponding increase in the demand upon the Office for expert advice. The assignments under the project "special advice and inspection" are therefore constantly increasing in number, and will this year, more than in previous years, constitute a distinct and important feature of our work. Examples are numerous of wasteful efforts to build roads out of worthless materials and in accordance with methods unsuited to local conditions. These mistakes our engineers and experts are constantly preventing by means of well-timed advice. The inspection of rural-delivery roads and the giving of advice for their improvement is being conducted along established lines, and it is evident that good results will follow these inspections.

Work is being steadily continued in the laboratories of the Office in the standardization of tests, the designing and improvement of testing apparatus and machinery, and in the study of the relationship between the mineral composition and physical qualities of road materials.

The preservation of macadam roads by means of dust preventives forms the chief project of an experimental character for the current fiscal year. Experiments are being conducted in Massachusetts, Kentucky, and the District of Columbia in cooperation with the Massachusetts State highway commission, the War Department, the Superintendent of the Zoological Park in Washington, and the city and county authorities at Bowling Green, Ky. These experiments are the first of a number which will be continued during the current fiscal year for the purpose of securing accurate and complete data concerning all known materials and preparations for the prevention of dust and the preservation of roads, and if possible to discover or devise some more successful method of solving this problem. At the same time a careful study will be made of all apparatus in use, both in this and foreign countries, with a view to the improvement of facilities.

Mention was made in the annual report for 1905 of a successful experiment in the building of a burnt-clay road at Clarksdale, Miss. During the current fiscal year this subject is receiving more thorough attention than heretofore, and experiments are being conducted at Indianola, Greenville, and Greenwood, Miss. The conditions seem to point to even greater success than attended the Clarksdale experiment, and it is hoped that before the close of this year a definite statement can be made concerning the feasibility, methods, and cost of building burnt-clay roads. If this kind of road proves

successful at small cost, a long step forward will have been made toward solving the road problem in the Mississippi Delta.

The investigation of road building materials in Minnesota will be completed during the early part of the current fiscal year, and the report published. Work under this project will be continued so far as our limited facilities will permit, but no State has been selected as yet in addition to Minnesota.

Under the project "introduction of model systems of road construction, maintenance, and administration," explained on page 21, an assistant engineer was assigned to Santa Barbara County, Cal., on May 30. He completed the investigation on July 10, and his report, after having been submitted to this Office for approval, was transmitted to the officials of Santa Barbara County. A somewhat similar investigation was made in McDowell County, W. Va., but conditions were such in that county as not to require a detailed investigation, and the recommendations were made verbally and by letter. Applications have also been received from Los Angeles County, Cal., where work is in progress, from Ventura County, Cal., and from Noxubee County, Miss., and informal requests have been made by several counties in Alabama preliminary to formal applications. It is probable that several counties will receive assistance of this character during the current fiscal year in addition to those already mentioned.

Cooperation with county newspapers in disseminating practical information has reached a definite stage, more than 1,200 newspapers having entered into the project with great enthusiasm. A number of articles have been prepared by engineers and experts, and the plan will be in operation within a comparatively short time. It is expected that within a few weeks the mailing list will contain the names of 2,000 newspapers. Assuming an average circulation of 1,000, the total number of subscribers reached through this medium would be 2,000,000. Assuming 5 readers for each subscriber, it is evident that an article printed in 2,000 newspapers might be read by 10,000,000 people. It certainly seems that we can reasonably expect good results at a small cost by means of this project.

The special investigations with reference to the corrosion of iron and the decomposition of rock powders will be continued during the current year. This work is attracting widespread attention, and a spirit of inquiry has been aroused which should be productive of advancement along these and similar lines.

A series of experiments will be conducted to determine the value of slag as a road material during the current year and the next fiscal year.

PLANS AND RECOMMENDATIONS FOR 1909.

Plans for the fiscal year 1909 do not contemplate an increase in object-lesson road work, except so far as may be possible with our present force and equipment. Conditions are such at the present time as to require that immediate and thorough attention be given to the projects of an experimental and investigative character, such as the investigation of dust preventives, road materials, management and accounting, and the general improvement of existing systems in the various counties and townships. The object-lesson method, in

order to produce adequate results, requires a large appropriation. The machinery used should be owned by the Government instead of borrowed from manufacturers, and specially constructed cars should be provided for its transportation. At the same time the personnel and equipment should be increased to such an extent as to permit of a uniform and equitable distribution of the benefits accruing to localities through this medium.

The preservation of macadam roads by means of dust preventives will form the chief investigative project for the next fiscal year, while the new projects described elsewhere providing for the investigation of road materials in the several States, the introduction of model systems of road construction, administration, and maintenance in the various counties, and educational work through the newspapers will be developed and increased as facilities are afforded. Instruction in highway engineering and the further introduction of sand-clay and burnt-clay roads will also constitute prominent features of next year's work.

The estimate for the fiscal year 1909 calls for an increase of $36,810 in our appropriation. Briefly stated, this amount, if allowed, will be distributed among the various projects as follows: Statutory roll, $2,850; instruction in highway engineering, $6,600; introduction of model systems of road construction, maintenance, and administration in the various counties, $4,400; investigation of dust preventives, $6,300; road accounting, $2,100; introduction of sand-clay and burnt-clay roads, $3,800; maintenance of earth roads with special reference to the split-log drag, $2,000; investigation of road materials in the several States, $2,000; purchase of machinery necessary to complete field outfits, $2,000; experiments with oil on natural soils, $1,400; investigation of slag as a road material, $1,360; corrosion of iron, $2,000.

REPORT OF THE APPOINTMENT CLERK.

U. S. DEPARTMENT OF AGRICULTURE,
OFFICE OF THE APPOINTMENT CLERK,
Washington, D. C., September 16, 1907.

SIR: I have the honor to submit herewith my annual report respecting the officers, employees, etc., constituting the body of the United States Department of Agriculture as it existed on July 1, 1907, and various addenda relating thereto.

Very respectfully, J. B. BENNETT,
Appointment Clerk.

Hon. JAMES WILSON, *Secretary.*

CHANGES IN THE FORCE OF THE DEPARTMENT.

Summary of appointments, promotions, removals, etc., in the United States Department of Agriculture during the fiscal year ended June 30, 1907.

IN THE CLASSIFIED CIVIL SERVICE.

Number of persons appointed from the eligible registers of the Civil Service Commission for a probationary period of six months in each case	2,478
Number of persons given absolute appointments who have rendered satisfactory service during their probationary appointment of six months	1,745
Number of persons who have been reinstated in the service of the Department within one year after having resigned or having been separated therefrom	50
Number of persons who have been transferred within the Department from subclerical to clerical and higher grades	65
Number of persons transferred from other Departments of the United States Government to the United States Department of Agriculture	53
Number of persons promoted in salary	2,820
Number of persons reduced in salary	60
Number of temporary or emergency appointments for periods of six months or less for service in Washington, D. C., and who are separated from the service when the emergency that caused their appointments has ended, generally wtihin one month and rarely continuing six months	403
Number of temporary or emergency appointments for periods of six months or less, conditioned as above, in the forests and fields and on stations in the various States outside of Washington, D. C.	1,202
Number of persons who declined to accept appointments in the Department	270
Number of persons who resigned their positions in the Department	642
Number of persons whose appointments were terminated	410
Number of persons who were removed from the service of the Department because of their misconduct	40
Number of persons who died while in the service of the Department	30

IN SPECIAL POSITIONS EXCEPTED FROM EXAMINATION UNDER CIVIL SERVICE RULES.

Number of persons appointed to positions which are in the classified civil service, but which are excepted from civil-service examination according to civil-service rules, the appointments being for very temporary periods in the forests and fields and on stations in the various States outside of Washington, D. C. 1,407
Number of persons promoted 97
Number of persons reduced in salary 9
Number of persons separated by resignation, termination of service, or removal (including 1 death) 714

IN THE UNCLASSIFIED SERVICE (POSITIONS OF MERE MANUAL LABORER).

Appointments in the District of Columbia 39
Promotions in salary in the District of Columbia 45
Reductions in salary in the District of Columbia 3
Separations from the service in the District of Columbia 72
Number of persons appointed in the forests and fields and on stations in the various States outside of Washington, D. C., being in the laborer grade, the appointments being for very short periods, usually averaging not more than three months 5,625
Number of temporary or emergency appointments in the District of Columbia 90
Number of separations of temporary or emergency appointees in the District of Columbia 92

DEATHS IN THE DEPARTMENT.

During the fiscal year ended June 30, 1907, there were recorded 35 deaths among the officers and employees of the U. S. Department of Agriculture, 9 of persons stationed in Washington and 26 of persons stationed outside of Washington, D. C., as shown in the following table:

Separations, by death, from the Department during the fiscal year ended June 30, 1907.

Name.	State.	Position.	Bureau, Division, or Office.	Salary.	Date of death.	Age.
					1906.	
Wesley J. Gardner [a]	Mont.	Forest assistant	Forest Service	$1,300.00	June 15	29
George J. Heck	Mo.	Assistant observer	Weather Bureau	1,000.00	July 4	40
Louis Greenbaum [b]	Mass.	Clerk, stenographer, and typewriter.	Plant Industry	1,200.00	July 12	21
Isaac L. Ball	Md.	Clerk	Animal Industry	1,200.00	Aug. 3	53
William E. Humphrey [b]	D. C.	Carpenter	Plant Industry	840.00	....do...	77
David Waters [b]	N. Y.	Clerk, stenographer, and typewriter.	Plant Industry	1,200.00	Aug. 19	29
Nina B. Dortch	Ill.	Assistant microscopist	Animal Industry	[c] 2.10	Aug. 27	29
Clement Bevelot	Ill.	Tagger	Animal Industry	720.00	Oct. 17	51
Arthur J. Lehman	Mo.	Meat inspector	Animal Industry	1,000,00	Oct. 30	39
Armour M. Scholefield	Ariz.	Assistant forest ranger	Forest Service	840.00	Nov. 30	23
Thomas S. Outram	Md.	Section director	Weather Bureau	1,800.00	Dec 5	50
Fred D. Waterman	N. Y.	Stock examiner	Animal Industry	900.00	Dec. 26	46
William H. Johnson [b]	Va.	Watchman	Soils	720.00	Dec. 27	80
James J. Malone	Ill.	Meat inspector	Animal Industry	1,000.00	Dec. 28	43
					1907.	
Charlotte R. Thomas [b]	Iowa	Messenger	Plant Industry	840.00	Jan. 9	77
Joseph F. Ketcham	Iowa	Patrol tagger	Animal Industry	900.00	Jan. 20	37
Mary Hurley	Ill.	Assistant microscopist	Animal Industry	[c] 2.10	Jan. 21	45
John W. McLain	Ariz.	Forest ranger	Forest Service	1,200.00	Feb. 12	33
Henry Brister	N. Y.	Veterinary inspector	Animal Industry	1,800.00	Feb. 23	56
William C. Honan	Ill.	Stock examiner	Animal Industry	900.00	Mar. 2	67
John Ferris	N. Y.	Meat inspector	Animal Industry	1,000.00	Mar. 18	39
John E. Clement [b]	D. C.	Skilled laborer	Publications	720.00	Mar. 20	27
Albert R. Walter [b]	D. C.	Messenger	Publications	600.00	Mar. 22	20
Michael Metzger	Ill.	Tagger	Animal Industry	900.00	Mar. 26	64
Mildred P. Dyre [b]	N. Y.	Clerk	Plant Industry	900.00	Mar. 31	36
William McKay	Ill.	Tagger	Animal Industry	900.00	Apr. 11	63
George Speechley	Cal.	Meat inspector	Animal Industry	1,000.00	Apr. 12	43
Helen Gardner [b]	Wis.	Clerk	Plant Industry	1,400.00	Apr. 20	52
John Sullivan	Mont.	Assistant forest ranger	Forest Service	900.00	May 5	51
James M. Burns	Mo.	Meat inspector	Animal Industry	1,000.00	May 12	46
Reginald Thomas	Iowa	Veterinary inspector	Animal Industry	1,600.00	May 17	41
Alice H. Richards	Ill.	Clerk	Animal Industry	720.00	May 26	60
Edward G. Coulon	Colo.	Meat inspector	Animal Industry	1,000.00	May 31	32
John Cash	Tex.	Agent in cattle tick eradication.	Animal Industry	1,000.00	June 5	37
Weyman R. Burns	Mo.	Tagger	Animal Industry	720.00	June 9	24
Abraham Mader	Iowa	Stock examiner	Animal Industry	900.00	June 13	66

[a] This death, which occurred near the close of the fiscal year 1906, was not chronicled in report for that year. [b] Stationed at Washington, D. C. [c] Per diem.

EXTRACTS FROM UNITED STATES COMPILED STATUTES 1901, VOL. I.

[Page 80, sec. 161.]

Departmental regulations.

The head of each Department is authorized to prescribe regulations, not inconsistent with law, for the government of his Department, the conduct of its officers and clerks, the distribution and performance of its business, and the custody, use, and preservation of the records, papers, and property appertaining to it.

[Page 84, sec. 165.]

Clerkships open to women.

Women may, in the discretion of the head of any Department, be appointed to any of the clerkships therein authorized by law, upon the same requisites and conditions, and with the same compensations, as are prescribed for men. (Act July 12, 1870, C. 251, sec. 2, 16 Stat. L., 230, 250.)

[Page 85, sec. 169.]

Authority to employ clerks and other employees.

Each head of a Department is authorized to employ in his Department such number of clerks of the several classes recognized by law, and such messengers, assistant messengers, copyists, watchmen, laborers, and other employees, and at such rates of compensation, respectively, as may be appropriated for by Congress from year to year.

[Page 87, sec. 170.]

Extra compensation to clerks prohibited.

No money shall be paid to any clerk employed in either Department at an annual salary, as compensation for extra services, unless expressly authorized by law.

[Act August 29, 1890, C. 820, 26 Stat. L., 371.]

Oaths of office to employees to be administered without compensation.

* * * And no officer, clerk, or employee of any executive department who is also a notary public or other officer authorized to administer oaths shall charge or receive any fee or compensation for administering oaths of office to employees of such department required to be taken on appointment or promotion therein.

And the chief of clerks of the several Executive Departments and of the various bureaus and offices thereof in Washington, District of Columbia, are hereby authorized and directed, on application and without compensation therefor, to administer oaths of office to employees required to be taken on their appointment or promotion.

[Act August 29, 1890, C. 820, 26 Stat., 371.]

Authority to administer the oath of office is conferred by Revised Statutes, sec. 1758 (p. 293, sec. 529).

[Act March 3, 1885, C. 338, sec. 2, 23 Stat. L., 356.]

Additional compensation to officers or employees, and detailed statement of expenditures.

That no part of the money herein or hereafter appropriated for the Department of Agriculture shall be paid to any person, as additional salary or compensation, receiving at the same time other compensation as an officer or employee of the Government; * * *

CHAPTER B.—THE WEATHER BUREAU.

[Act October 1, 1890, C. 1266, 26 Stat. L., 653.]

AN ACT To increase the efficiency and reduce the expenses of the Signal Corps of the Army, and to transfer the Weather Service to the Department of Agriculture.

Establishment of the Bureau.

Be it enacted, etc., That the civilian duties now performed by the Signal Corps of the Army shall hereafter devolve upon a bureau to be known as the

Weather Bureau, which, on and after July first, eighteen hundred and ninety-one, shall be established in and attached to the Department of Agriculture, and the Signal Corps of the Army shall remain a part of the military establishment under the direction of the Secretary of War, and all estimates for its support shall be included with other estimates for the support of the military establishment.

EXTRACTS FROM LAWS BEARING UPON THE DEPARTMENTAL SERVICE.

Act of May 1, 1884:

* * * Hereafter no Department or officer of the United States shall accept voluntary service for the Government or employ personal service in excess of that authorized by law, except in cases of sudden emergency involving the loss of human life or the destruction of property. (23 Stat. L., 17; Sup. R. S., vol. 1, 2d ed., p. 427.)

Act of July 31, 1894:

SEC. 2. * * * No person who holds an office, the salary or annual compensation attached to which amounts to the sum of two thousand five hundred dollars, shall be appointed to or hold any other office to which compensation is attached unless specially heretofore or hereafter specially authorized thereto by law; but this shall not apply to retired officers of the Army or Navy whenever they may be elected to public office or whenever the President shall appoint them to office by and with the advice and consent of the Senate. (28 Stat. L., 205; Sup. R. S., vol. 2 (No. 4), p. 212, sec. 2.)

Act of March 15, 1898:

SEC. 7. Hereafter it shall be the duty of the heads of the several Executive Departments, in the interest of the public service, to require of all clerks and other employees, of whatever grade or class, in their respective Departments, not less than seven hours of labor each day, except Sundays and days declared public holidays by law or Executive order: *Provided*, That the heads of the Departments may, by special order stating the reason, further extend the hours of any clerk or employee in their Departments, respectively; but in case of an extension it shall be without additional compensation: *Provided further*, That the head of any Department may grant thirty days' annual leave, with pay, in any one year to each clerk or employee: *And provided further*, That where some member of the immediate family of a clerk or employee is afflicted with a contagious disease and requires the care and attendance of such employee, or where his or her presence in the Department would jeopardize the health of fellow-clerks, and in exceptional and meritorious cases, where a clerk or employee is personally ill, and where to limit the annual leave to thirty days in any one calendar year would work peculiar hardship, it may be extended, in the discretion of the head of the Department, with pay, not exceeding thirty days in any one case or in any one calendar year.

This section shall not be construed to mean that so long as a clerk or employee is borne upon the rolls of the Department in excess of the time herein provided for or granted that he or she shall be entitled to pay during the period of such excessive absence, but that the pay shall stop upon the expiration of the granted leave. (30 Stat. L., 316; Sup. R. S., vol. 2 (No. 8), pp. 736, 737, sec. 7.)

Act of July 7, 1898:

* * * Nothing contained in section seven of the act making appropriations for legislative, executive, and judicial expenses of the Government for the fiscal year eighteen hundred and ninety-nine, approved March fifteenth, eighteen hundred and ninety-eight, shall be construed to prevent the head of any Executive Department from granting thirty days' annual leave, with pay, in any one year to a clerk or employee, notwithstanding such clerk or employee may have had during such year not exceeding thirty days' leave, with pay, on account of sickness, as provided in said section seven. (30 Stat. L., 653; Sup. R. S., vol. 2 (No. 8), p. 882, par. 1.)

Act of February 24, 1899:

SEC. 4. * * * *Provided*, That the thirty days' annual leave of absence, with pay, in any one year to clerks and employees in the several Executive Departments authorized by existing law shall be exclusive of Sundays and legal holidays. (30 Stat. L., 890; Sup. R. S., vol. 2 (No. 8), pp. 946, 947, sec. 4.)

Act of May 25, 1900:

* * * The employees of the Bureau of Animal Industry outside of the city of Washington may hereafter, in the discretion of the Secretary of Agriculture, be granted leaves of absence not to exceed fifteen days in any one year. (31 Stat. L., p. 202.)

Act of March 2, 1901:

Weather Bureau Service. * * * Thirty local forecast officials, section directors, observers, operators, repair men, messengers, boy messengers, laborers, and other necessary employees outside of the city of Washington, * * * without additional expense to the Government, may hereafter, in the discretion of the Secretary of Agriculture, be granted such leaves of absence as are now authorized to employees in the office of the Chief of the Weather Bureau, not to exceed thirty days in any one year. * * * (31 Stat. L., p. 924.)

EXTRACTS FROM THE FISCAL REGULATIONS OF THE UNITED STATES DEPARTMENT OF AGRICULTURE.

Ordered by the Secretary of Agriculture May 28, 1907.

1. *Appointments.*—To every person entering the public service in the Department of Agriculture, except in the cases hereinafter mentioned, a written appointment will be issued, describing in general terms the character of the service to be performed and specifying the rate of compensation and the appropriation from which payment is to be made.

2. *Notice of appointment must precede service.*—Recommendation for an appointment must be made in advance, and the person who is to become an employee of the Department must not be assigned to duty until notice has been received that the appointment has been made.

3. *Employment without appointment.*—To cover the employment of persons at permanent and temporary stations outside of the District of Columbia during periods not exceeding thirty days, letters of authority will be issued in lieu of formal individual appointments. Whenever necessary a letter of authority will also be issued to officials in charge of field parties to employ, without prior formal individual appointment, minor assistants for service in the field during an entire field season; but a report for the approval of the Secretary and as required by the civil-service rules must be made at the end of each month, setting forth the specific kind of labor or duties performed in every case.

4. *Double employment prohibited.*—No person, while holding a position in another Department, or while officially connected with any other branch of the Government service, shall be employed in any capacity, even temporarily, in the Department of Agriculture.

5. *Oath of office.*—Every person receiving an original or other appointment on a statutory roll, or an original appointment on a lump-fund roll, must take an oath of office. No oath will be required in connection with promotions, demotions, or transfers from one roll to another in the same bureau or independent office when only lump-fund rolls are involved. Every appointee to a statutory position must take the oath of office at the time of or before entering upon his duties. Oaths of office may be taken before any officer having an official seal, with authority to administer oaths either under United States statutes or local municipal law, and must be properly certified under the hand and seal of such officer. Oaths of office may also be taken before the chief clerk of the Department or the chief clerk of any bureau or statutory division thereof, provided the chief clerk be one who occupies a statutory position.

6. *Outside employment.*—No officer or employee shall perform or be engaged upon any work for private individuals, firms, companies, corporations, or institutions without the written consent of the Secretary, first had and obtained through the chief of the bureau, office, or division in which said officer or employee serves.

ORIGIN OF THE UNITED STATES DEPARTMENT OF AGRICULTURE.

EXTRACTS FROM LAWS, SHOWING APPROPRIATIONS FOR AGRICULTURE. 1838–1862.

[Volume 5, United States Statutes, chapter 188, page 302: "An act to encourage the introduction and promote the cultivation of tropical plants in the United States."]

Whereas in obedience to the Treasury circular of the sixth of September, eighteen hundred and twenty-seven, Doctor Henry Perrine, late American consul

at Campeche, has distinguished himself by his persevering exertions to introduce tropical plants into the United States; and whereas he has demonstrated the existence of a tropical climate in southern Florida, and has shown the consequent certainty of the immediate domestication of tropical plants in tropical Florida, and the great probability of their gradual acclimation throughout all our Southern and Southwestern States, especially of such profitable plants as propagate themselves on the poorest soils; and whereas if the enterprise should be successful, it will render valuable our hitherto worthless soils by covering them with a dense population of small cultivators and family manufacturers, and will thus promote the peace, prosperity, and permanency of the Union: Therefore,

Be it enacted by the Senate and House of Representatives of the United States of America in Congress assembled, That a township of land is hereby granted to Doctor Henry Perrine and his associates, in the southern extremity of the peninsula of east Florida, to be located in one body of six miles square, upon any portion of the public lands below twenty-six degrees north latitude.

SEC. 2. *And be it further enacted*, That the said tract of land shall be located within two years from this date by said Henry Perrine, and shall be surveyed under his direction by the surveyor of Florida: *Provided*, That it shall not embrace any land having sufficient quantities of naval timber to be reserved to the United States, nor any sites for maritime ports or cities.

SEC. 3. *And be it further enacted*, That whenever any section of land in said tract shall be really occupied by a bona fide settler, actually engaged in the propagation or cultivation of valuable tropical plants, and upon proof thereof being made to the Commissioner of the General Land Office, a patent shall issue to the said Henry Perrine and his associates.

SEC. 4. *And be it further enacted*, That every section of land in the tract aforesaid which shall not be occupied by an actual settler positively engaged in the propagation or cultivation of useful tropical plants within eight years from the location of said tract, or when the adjacent territory shall be surveyed and offered for sale, shall be forfeited to the United States.

Approved July 7, 1838.

[Volume 5, United States Statutes, chapter 88, section 9, page 354: "An act in addition to 'An act to promote the progress of the useful arts.'"]

SEC. 9. *And be it further enacted*, That a sum of money not exceeding one thousand dollars be, and the same is hereby, appropriated, out of the patent fund, to be expended by the Commissioner of Patents in the collection of agricultural statistics, and for other agricultural purposes; for which the said Commissioner shall account in his next annual report.

Approved March 3, 1839.

[Volume 5, chapter 202: "An act legalizing and making appropriation, &c.," sec. 26, page 533.]

For the collection of agricultural statistics, and for other agricultural purposes, one thousand dollars.

Approved August 26, 1842.

[Volume 5, chapter 100: "An act making appropriations for the civil and diplomatic expenses of Government, &c.," page 642.]

PATENT OFFICE: For the collection of agricultural statistics, and for other agricultural purposes, to be paid out of the patent fund, two thousand dollars.

Approved March 3, 1843.

[Volume 5, chapter 105: "An act making appropriations for the civil and diplomatic expenses of Government, &c.," page 687.]

PATENT OFFICE: For the collection of agricultural statistics, and for other purposes, two thousand dollars.

Approved June 7, 1844.

[Volume 5, chapter 71: "An act making appropriations for the civil and diplomatic expenses of Government, &c.," page 757.]

PATENT OFFICE: For the collection [of] agricultural statistics, and other purposes, three thousand dollars, to be paid out of the patent fund.

Approved March 3, 1845.

No appropriation for the collection of agricultural statistics is found in the act making appropriations for the civil and diplomatic expenses of Government in the year 1846.

[Volume 9, chapter 47: "An act making appropriations for the civil and diplomatic expenses of Government, &c.," page 160.]

PATENT OFFICE: For the collection of agricultural statistics, and other purposes, three thousand dollars, to be paid out of the patent fund.

Approved March 3, 1847.

[Volume 9, chapter 156: "An act making appropriations for the civil and diplomatic expenses of Government, &c.," page 285.]

PATENT OFFICE: For the collection of agricultural statistics, and other purposes, thirty-five hundred dollars, to be paid out of the patent fund.

Approved August 12, 1848.

[Volume 9, chapter 100: "An act making appropriations for the civil and diplomatic expenses of Government, &c.," page 364.]

For the collection of agricultural statistics, and other purposes, thirty-five hundred dollars. For defraying the expenses of chemical analysis of vegetable substances produced and used for the food of man and animals in the United States, to be expended under the direction of the Commissioner of Patents, one thousand dollars, which several sums * * * shall be paid out of the patent fund.

Approved March 3, 1849.

[Volume 9, chapter 90: "An act making appropriations for the civil and diplomatic expenses of Government, &c.," page 541.]

For the collection of agricultural statistics, four thousand five hundred dollars, to be paid out of the patent fund.

Approved September 30, 1850.

[Volume 9, chapter 32: "An act making appropriations for the civil and diplomatic expenses of Government, &c.," page 615.]

For the collection of agricultural statistics, five thousand five hundred dollars, to be paid out of the patent fund.

Approved March 3, 1851.

[Volume 10, chapter 108: "An act making appropriations for the civil and diplomatic expenses of the Government for the year ending the 30th of June, 1853, and for other purposes," page 95.]

For the collection of agricultural statistics, and for the purchase of seeds, to be paid out of the patent fund, five thousand dollars.

Approved August 31, 1852.

[Volume 10, chapter 97: "An act making appropriations for the civil and diplomatic expenses of Government for the year ending the 30th of June, 1854," page 208.]

For the collection of agricultural statistics, and purchase of seeds, to be paid out of the patent fund, five thousand dollars.

Approved March 3, 1853.

[Volume 10, chapter 60: "An act to supply deficiencies in the appropriations for the services of the fiscal year ending the 30th of June, 1854, and for other purposes," page 292.]

For the collection of agricultural statistics, and the procurement and distribution of seeds and cuttings, to be expended under the direction of the Commissioner of Patents, ten thousand dollars.

Approved May 31, 1854.

[Volume 10, chapter 242: "An act making appropriations for the civil and diplomatic expenses of Government for the year ending the 30th of June, 1855, and for other purposes," page 567.]

For the collection of agricultural statistics and the procurement and distributions of cuttings and seeds, twenty-five thousand dollars, to be paid out of any money in the Treasury not otherwise appropriated.

Approved August 4, 1854.

[Volume 10, chapter 175: "An act making appropriations for the civil and diplomatic expenses of Government for the year ending 30th of June, 1856, and for other purposes," page 664.]

For the collection of agricultural statistics and procuring and distributing cuttings and seeds, twenty-five thousand dollars.

Page 673: For the reimbursement of the Patent Office fund for moneys heretofore paid out by appropriations by acts of Congress for seeds and the collection of agricultural statistics, forty thousand seventy-eight dollars and seventy-eight cents, to be paid out of any moneys in the Treasury not otherwise appropriated.

Approved March 3, 1855.

[Volume 11, chapter 29: "An act to supply deficiencies of the appropriation for the services of the fiscal year ending the 30th of June, 1856," page 14.]

For the collection of agricultural statistics, investigations for promoting agriculture and rural economy, and the procurement and distribution of cuttings and seeds, to be expended under direction of the Commissioner of Patents, thirty thousand dollars.

Approved May 16, 1856.

[Volume 11, chapter 129: "An act making appropriations for certain civil expenses of the Government for the year ending the 30th of June, 1857," page 89.]

For the collection of agricultural statistics, investigations for promoting agricultural and rural economy, and the procurement and distribution of cuttings and seeds, seventy-five thousand dollars, to be expended under the direction of the Commissioner of Patents.

Approved August 18, 1856.

[Volume 11, chapter 108: "An act making appropriations for certain civil expenses of the Government for the year ending the 30th of June, 1858," page 226.]

For the collection of agricultural statistics, investigations for promoting agriculture and rural economy, and the procurement and distribution of cuttings and seeds, sixty thousand dollars, to be expended under the direction of the Commissioner of Patents; and to enable the Commissioner of Patents to collect and report information in relation to the consumption of cotton in the several countries of the world, three thousand five hundred dollars.

Approved March 3, 1857.

[Volume 11, chapter 154: "An act making appropriations for sundry civil expenses of the Government for the year ending the 30th of June, 1859," page 321.]

For collection of agricultural statistics, investigations for promoting agriculture and rural economy, and the procurement of cuttings and seeds, sixty thousand dollars: *Provided*, That it shall be the duty of the Commissioner of Patents to submit to the Secretary of the Interior, at the commencement of each session of Congress, invoices of seeds and cuttings purchased with the money hereby appropriated; and also a statement of expenses in procuring agricultural statistics, and incidental expenses in procuring seeds, cuttings, and information.

Approved June 30, 1858.

[Volume 11, chapter 82: "An act making appropriations for sundry civil expenses of the Government for the year ending the 30th of June, 1860," page 427.]

For collection of agricultural statistics, investigations for promoting agriculture and rural economy, and the procurement of cuttings and seeds, forty thousand dollars.

Approved March 3, 1859.

[Volume 12, chapter 211: "An act making appropriations for sundry civil expenses of the Government for the year ending the 30th of June, 1861," pages 108, 109.]

For collection of agricultural statistics, investigations for promoting agricultural and rural economy, and the procurement of cuttings and seeds, sixty thousand dollars.

Approved June 25, 1860.

[Volume 12, chapter 84: "An act making appropriations for sundry civil expenses of the Government for the year ending June 30, 1862," page 217.]

For collection of agricultural statistics, investigations for promoting agriculture and rural economy, and the procurement, propagation, and distribution of cuttings and seeds, sixty thousand dollars: *Provided, however*, That in the expenditure of this appropriation, and especially in the selection of cuttings and seeds for distribution, due regard shall be had to the purposes of general cultivation and the encouragement of the agricultural and rural interests of all parts of the United States.

Approved March 2, 1861.

[Volume 12, chapter 34: "An act making appropriations for sundry civil expenses of the Government for the year ending the 30th of June, 1863, and additional appropriations for the year ending the 30th of June, 1862," page 350.]

For collection of agricultural statistics, investigations for promoting agriculture and rural economy, and the procurement, propagation and distribution of cuttings and seeds, of new and useful varieties, and for the introduction and protection of insectivorous birds, and for investigations to test the practicability of preparing flax and hemp as a substitute for cotton, sixty thousand dollars.

Approved March 1, 1862.

All the above appropriations were to be expended by the Patent Office.

On September 30, 1861, the Agricultural Division of the Department of the Interior, being the immediate predecessor of the United States Department of Agriculture, consisted of nine (9) persons.

ESTABLISHMENT AND GROWTH OF THE DEPARTMENT OF AGRICULTURE.

The Department of Agriculture was established July 1, 1862, according to the provisions of an act approved May 15, 1862 (vol. 12, chap. 72, pp. 387, 388, U. S. Stat. L.)

Growth of the force of the Department from September 30, 1863, to July 1, 1907.

Date.	Number employed.	Date.	Number employed.
1863, September 30	29	1893, July 1	1,870
1867, September 30	99	1895, July 1	2,043
1871, September 30	84	1897, July 1	2,444
1873, September 30	92	1899, July 1	2,065
1875, September 30	90	1900, November 16	3,128
1877, September 30	77	1901, July 1	3,388
1879, June 30	93	1902, July 1	3,789
1881, July 1	108	1903, July 1	4,200
1883, July 1	239	1904, July 1	4,504
1885, July 1	214	1905, July 1	5,446
1887, July 1	328	1906, July 1	6,242
1889, July 1	488	1907, July 1	9,107
1891, July 1 [a]	1,577		

[a] The large increase on July 1, 1891, resulted from the transfer of the Weather Bureau to the Department of Agriculture on that date.

The following statements show the increases in the number of persons employed in various branches of the Department.

OFFICE OF THE SECRETARY.

Growth of total force employed from July 1, 1881, to July 1, 1907.

Date.	Number employed.	Date.	Number employed.
July 1, 1881	26	July 1, 1895	72
July 1, 1883	48	July 1, 1897	90
July 1, 1885	47	July 1, 1899	85
July 1, 1887	56	July 1, 1901	65
July 1, 1889	45	July 1, 1903	70
July 1, 1891	55	July 1, 1905	115
July 1, 1893	66	July 1, 1907	105

WEATHER BUREAU.

The Weather Bureau was transferred from the Signal Corps in the War Department to the Department of Agriculture by act of Congress approved October 1, 1890, and effective July 1, 1891.

Growth of total force employed from July 1, 1891, to July 1, 1907.

Date.	Number employed.	Date.	Number employed.
July 1, 1891	818	July 1, 1901	1,185
July 1, 1893	921	July 1, 1903	1,410
July 1, 1895	892	July 1, 1905	1,540
July 1, 1897	1,075	July 1, 1907	[a] 1,550
July 1, 1899	1,163		

[a] In addition to the 1,550 persons whose names are included in the annual register of the Weather Bureau of July 1, 1907, there were temporarily employed at river and rainfall stations 139 persons who were paid during the season for each observation taken according to instruction. There were also employed on stations of the Weather Bureau in emergency cases 5 persons, making the total number employed in the Weather Bureau on July 1, 1907—regular, temporary, and emergency employees—1,694.

BUREAU OF ANIMAL INDUSTRY.

The number of persons investigating diseases of domestic animals July 1, 1881, was 8.

The number of persons investigating diseases of domestic animals July 1, 1883, was 8.

The Bureau of Animal Industry was established by an act of Congress May 29, 1884.

Growth of total force employed from July 1, 1885, to July 1, 1907.

Date.	Number employed.	Date.	Number employed.
July 1, 1885	24	July 1, 1897	777
July 1, 1887	61	July 1, 1899	1,106
July 1, 1889	174	July 1, 1901	1,286
July 1, 1891	334	July 1, 1903	1,386
July 1, 1893	495	July 1, 1905	1,475
July 1, 1895	709	July 1, 1907	[a] 3,170

[a] There were 12 laborers employed in dipping cattle, in emergency cases, on July 1, 1907, in addition to the number of persons included in the annual register of the Bureau, thus making the total number employed in the Bureau of Animal Industry on that date 3,182.

The work of the Bureau of Animal Industry is greatly increased by the act of Congress of June 30, 1906, requiring the supervision of all slaughtering establishments engaged in the preparation of meat and meat-food products for shipment in interstate commerce. The appropriation for this work was increased to $3,000,000, whereas the amount expended by the Bureau under the previous law was about $750,000. In addition the Bureau was instructed by Congress to take up the work of eradicating cattle ticks from the Southern States. These ticks are the agencies by which the infectious disease of cattle known as "Texas fever" is distributed, and are a great detriment to the raising of cattle in the Southern States. The work of the Bureau is also increased by additional appropriations for the purpose of eradicating scabies in cattle and sheep, and this work was taken up in nearly every State and Territory west of the Mississippi River.

BUREAU OF PLANT INDUSTRY.

The Bureau of Plant Industry was established by Congress by the act making appropriations for the Department of Agriculture for the fiscal year ending June 30, 1902, approved March 2, 1901. It was a consolidation of the former divisions of Botany, Pomology, Vegetable Physiology and Pathology, Agrostology, Experimental Gardens and Grounds, and Seeds.

Growth of total force employed from July 1, 1881, to July 1, 1907.

Date.	Number employed.	Date.	Number employed.
July 1, 1881	41	July 1, 1895	132
July 1, 1883	56	July 1, 1897	127
July 1, 1885	28	July 1, 1899	159
July 1, 1887	33	July 1, 1901	203
July 1, 1889	83	July 1, 1903	325
July 1, 1891	105	July 1, 1905	509
July 1, 1893	131	July 1, 1907	[a] 763

[a] The number of temporary emergency employees in the Bureau of Plant Industry employed in the cotton boll weevil infested districts, outside of Washington, D. C., on July 1, 1907, was 44, making the total number employed therein on July 1, 1907, 807.

The increase in the force of the Bureau of Plant Industry is due to the increase in the demands on the Bureau of Plant Industry for work of all kinds from different parts of the country.

FOREST SERVICE.

The Division of Forestry was established July 1, 1880, by Congress. Its designation was changed by Congress to "Bureau of Forestry," becoming effective July 1, 1901, and changed to "Forest Service," becoming effective July 1, 1905.

Growth of total force employed from July 1, 1880, to July 1, 1907.

Date.	Number employed.	Date.	Number employed.
July 1, 1880	1	July 1, 1895	10
July 1, 1881	2	July 1, 1897	14
July 1, 1883	4	July 1, 1899	54
July 1, 1885	3	July 1, 1901	192
July 1, 1887	7	July 1, 1903	297
July 1, 1889	7	July 1, 1905	939
July 1, 1891	10	July 1, 1907	[a] 1,880
July 1, 1893	10		

[a] The number of temporary emergency employees engaged on the National Forest Reserves on July 1, 1907, was 132, making the total in the Forest Service on that date 2,012.

The work of the Forest Service has been greatly increased by acts of Congress placing the National Forests under its supervision, the acreage of which amounts to 158,809,459 acres.

BUREAU OF CHEMISTRY.

Growth of total force employed from July 1, 1881, to July 1, 1907.

Date.	Number employed.	Date.	Number employed.
July 1, 1881	8	July 1, 1895	24
July 1, 1883	11	July 1, 1897	20
July 1, 1885	8	July 1, 1899	26
July 1, 1887	13	July 1, 1901	29
July 1, 1889	20	July 1, 1903	50
July 1, 1891	27	July 1, 1905	97
July 1, 1893	24	July 1, 1907	250

The increase in the force of the Bureau of Chemistry in 1903 and 1905 was due to the establishment of branch laboratories in various cities of the United States, for the purpose of inspecting imported food products, as authorized by appropriation bills. The increase to July 1, 1907, is due to the work involved in the enforcement of the food and drugs act, June 30, 1906.

BUREAU OF SOILS.

The Division of Agricultural Soils was established in the Weather Bureau March 3, 1894. The "Division of Soils" was established as an independent division in the Department on July 1, 1896, and its title changed to Bureau of Soils on July 1, 1901.

Growth of total force employed from July 1, 1895, to July 1, 1907.

Date.	Number employed.	Date.	Number employed.
July 1, 1895	10	July 1, 1903	130
July 1, 1897	[a] 33	July 1, 1905	130
July 1, 1899	15	July 1, 1907	116
July 1, 1901	57		

[a] Of these, 24 were soil observers, who were each paid 25 cents for each soil observation and were employed for not more than two months in the year.

BUREAU OF STATISTICS.

Growth of total force employed from July 1, 1881, to July 1, 1907.

Date.	Number employed.	Date.	Number employed.
July 1, 1881	3	July 1, 1895	85
July 1, 1883	86	July 1, 1897	133
July 1, 1885	66	July 1, 1899	132
July 1, 1887	95	July 1, 1901	145
July 1, 1889	82	July 1, 1903	151
July 1, 1891	100	July 1, 1905	155
July 1, 1893	111	July 1, 1907	149

BUREAU OF ENTOMOLOGY.

Growth of total force employed from July 1, 1881, to July 1, 1907.

Date.	Number employed.	Date.	Number employed.
July 1, 1881	4	July 1, 1895	20
July 1, 1883	15	July 1, 1897	21
July 1, 1885	20	July 1, 1899	23
July 1, 1887	4	July 1, 1901	26
July 1, 1889	31	July 1, 1903	34
July 1, 1891	28	July 1, 1905	88
July 1, 1893	25	July 1, 1907	[a] 118

[a] The number of temporary emergency workers in the Bureau employed for short periods in the work of preventing the spread of moths in districts infested by them outside of Washington, D. C., on July 1, 1907, was 160; the number of temporary emergency workers employed in the Cotton Boll Weevil Investigations in weevil-infested districts outside of Washington, D. C., on July 1, 1907, was 3, making the total number employed on July 1, 1907, 281.

BUREAU OF BIOLOGICAL SURVEY.

The Division of Economic Ornithology and Mammalogy was established July 1, 1887, by Congress. That title was changed to "Division of Biological Survey" July 1, 1896, by Congress; and again to "Bureau of Biological Survey" July 1, 1905.

Growth of total force employed from July 1, 1887, to July 1, 1907.

Date.	Number employed.	Date.	Number employed.
July 1, 1887	6	July 1, 1899	23
July 1, 1889	9	July 1, 1901	21
July 1, 1891	13	July 1, 1903	30
July 1, 1893	14	July 1, 1905	37
July 1, 1895	19	July 1, 1907	38
July 1, 1897	23		

DIVISION OF ACCOUNTS AND DISBURSEMENTS.

Growth of total force employed from July 1, 1881, to July 1, 1907.

Date.	Number employed.	Date.	Number employed.
July 1, 1881	2	July 1, 1895	10
July 1, 1883	3	July 1, 1897	10
July 1, 1885	3	July 1, 1899	10
July 1, 1887	3	July 1, 1901	12
July 1, 1889	9	July 1, 1903	16
July 1, 1891	11	July 1, 1905	22
July 1, 1893	11	July 1, 1907	31

DIVISION OF PUBLICATIONS.

The Division of Publications was established July 1, 1895, by Congress, in the act making appropriations for the Department of Agriculture for the fiscal year ending June 30, 1896, approved March 2, 1895; it absorbed and succeeded the "Division of Records and Editing," which was established July 1, 1890, by Congress, in the act making appropriations for the Department of Agriculture for the fiscal year ending June 30, 1891, approved July 14, 1890.

The work of illustrations and engravings necessary for the publications issued by the Department, and the fund appropriated by Congress therefor, were assigned to the Division of Records and Editing on July 1, 1894, by the Secretary of Agriculture.

The "Document and Folding Room" of the Department was placed in charge of the Chief of the Division of Publications, by order of the Chief Clerk of the Department, on July 1, 1896, and was transferred to the Division of Publications as the "Document Section" July 1, 1897, by Congress in the act making appropriations for the Department of Agriculture for the fiscal year ending June 30, 1898, approved April 23, 1897.

Growth of total force employed from July 1, 1881, to July 1, 1907, in the Division of Publications.

Date.	Number employed.	Date.	Number employed.
July 1, 1881	1	July 1, 1895	21
July 1, 1883	3	July 1, 1897	61
July 1, 1885	3	July 1, 1899	81
July 1, 1887	5	July 1, 1901	142
July 1, 1889	9	July 1, 1903	154
July 1, 1891	30	July 1, 1905	166
July 1, 1893	22	July 1, 1907	182

LIBRARY.

Growth of total force employed from July 1, 1881, to July 1, 1907.

Date.	Number employed.	Date.	Number employed.
July 1, 1881	1	July 1, 1895	2
July 1, 1883	1	July 1, 1897	6
July 1, 1885	1	July 1, 1899	6
July 1, 1887	1	July 1, 1901	8
July 1, 1889	2	July 1, 1903	11
July 1, 1891	2	July 1, 1905	16
July 1, 1893	1	July 1, 1907	15

OFFICE OF EXPERIMENT STATIONS.

The Office of Experiment Stations was established July 1, 1888, by act of Congress.

Growth of total force employed from July 1, 1889, to July 1, 1907.

Date.	Number employed.	Date.	Number employed.
July 1, 1889	8	July 1, 1899	60
July 1, 1891	26	July 1, 1901	122
July 1, 1893	18	July 1, 1903	106
July 1, 1895	27	July 1, 1905	116
July 1, 1897	38	Jnly 1, 1907	[a] 156

[a] Number of temporary emergency employees in the Office of Experiment Stations employed for short periods in the field in Nutrition and Irrigation and Drainage Investigations on July 1, 1907, was 18, making the total number employed 174.

OFFICE OF PUBLIC ROADS.

The Office of Public Road Inquiries was established July 1, 1893, by Congress. It was given a statutory organization, with the title Office of Public Roads, on July 1, 1905.

Growth of total force employed from July 1, 1893, to July 1, 1907.

Date.	Number employed.	Date.	Number employed.
July 1, 1893	1	July 1, 1901	12
July 1, 1895	5	July 1, 1903	26
July 1, 1897	7	July 1, 1905	41
July 1, 1899	6	July 1, 1907	56

Number of officers and employees in the different branches of the U. S. Department of Agriculture on July 1, 1907, showing the number stationed in Washington, D. C., and the number employed outside of Washington, D. C.

Branch of the Department.	Number of officers and employees.		
	Stationed in Washington, D. C.	Stationed outside of Washington, D. C.	Total.
Office of the Secretary	108	1	109
Weather Bureau	189	1,505	1,694
Bureau of Animal Industry	227	2,955	3,182
Bureau of Plant Industry	405	402	807
Forest Service	329	1,683	2,012
Bureau of Chemistry	134	116	250
Bureau of Soils	67	49	116
Bureau of Statistics	98	51	149
Bureau of Entomology	63	218	281
Bureau of Biological Survey	24	14	38
Division of Accounts and Disbursements	31	.....	31
Division of Publications	182	.....	182
Library	15	.....	15
Office of Experiment Stations	63	111	174
Office of Public Roads	27	29	56
Employed in connection with the erection of the Department's new building	10	1	11
Total	1,972	7,135	9,107

Statement of the number of persons, on July 1, 1907, occupying statutory positions, on what are known as the statutory rolls of the Department, being specific positions especially created by act of Congress making appropriations for the U. S. Department of Agriculture; also the total number of persons in the said Department paid from miscellaneous or lump-sum funds appropriated by act of Congress as aforesaid, in which specific positions are not created.

Bureau, Division, Office, etc.	Statutory.	Lump sum.	Total.
Office of the Secretary	103	6	109
Weather Bureau	183	1,511	1,694
Bureau of Animal Industry	63	3,119	3,182
Bureau of Plant Industry	191	616	807
Forest Service	150	1,862	2,012
Bureau of Chemistry	43	207	250
Bureau of Soils	30	86	116
Bureau of Statistics	76	73	149
Bureau of Entomology	17	264	281
Bureau of Biological Survey	6	32	38
Division of Accounts and Disbursements	31	.....	31
Division of Publications	148	34	182
Library	14	1	15
Office of Experiment Stations	30	144	174
Office of Public Roads	10	46	56
New building	.....	11	11
Total	1,095	8,012	9,107

Scientists in the entire U. S. Department of Agriculture on July 1, 1907.

Branch of the Department.	Number.	Branch of the Department.	Number.
Weather Bureau	150	Bureau of Entomology	76
Bureau of Animal Industry	882	Bureau of Biological Survey	18
Bureau of Plant Industry	408	Office of Experiment Stations	60
Forest Service	209	Bureau of Statistics	8
Bureau of Chemistry	106	Office of Public Roads	28
Bureau of Soils	78		
		Total	2,023

Summary showing the number of persons employed in the District of Columbia in the U. S. Department of Agriculture, by States, whence appointed, and the aggregate of salaries or compensation per annum.

Whence appointed.	Number.	Aggregate compensation.	Whence appointed.	Number.	Aggregate compensation.
Alabama	20	$19,950	Nevada	2	$2,100
Arizona	2	4,800	New Hampshire	15	19,420
Arkansas	18	15,120	New Jersey	24	34,910
California	23	31,230	New Mexico	2	2,200
Colorado	11	12,170	New York	133	170,956
Connecticut	19	27,812	North Carolina	40	47,400
Delaware	5	6,520	North Dakota	7	9,620
District of Columbia	391	316,778	Ohio	72	96,560
Florida	14	18,360	Oklahoma	11	15,000
Georgia	31	27,800	Oregon	6	5,420
Hawaii	2	2,720	Pennsylvania	109	132,784
Idaho	3	3,700	Porto Rico	5	3,700
Illinois	93	121,140	Rhode Island	5	4,680
Indiana	42	54,820	South Carolina	32	33,220
Iowa	54	77,720	South Dakota	7	10,130
Kansas	44	66,206	Tennessee	31	30,170
Kentucky	29	29,200	Texas	35	33,690
Louisiana	12	12,480	Utah	8	11,900
Maine	15	17,750	Vermont	12	14,270
Maryland	117	138,122	Virginia	136	122,746
Massachusetts	68	92,350	Washington	11	15,782
Michigan	61	86,200	West Virginia	23	27,340
Minnesota	31	45,990	Wisconsin	32	32,398
Mississippi	16	14,160	Wyoming	6	8,660
Missouri	52	66,240			
Montana	9	10,590	Total	1,970	2,240,714
Nebraska	24	35,730			

COMMISSIONERS AND SECRETARIES OF AGRICULTURE.

Name and length of service of each Commissioner and of each Secretary of Agriculture since the organization of the U. S. Department of Agriculture, July 1, 1862.

Name.	Rank.	Appointed under the Administration of President—	When appointed.	Service terminated.
Isaac Newton	Commissioner	Lincoln	July 1, 1862	June 19, 1867
John W. Stokes	do	Johnson	June 20, 1867	Dec. 4, 1867
Horace Capron	do	do	Dec. 5, 1867	July 31, 1871
Frederick Watts	do	Grant	Aug. 1, 1871	June 30, 1877
Wm. G. Le Duc	do	Hayes	July 1, 1877	June 30, 1881
Geo. B. Loring	do	Garfield	July 1, 1881	Apr. 3, 1885
Norman J. Colman	do	Cleveland	Apr. 4, 1885	Feb. 12, 1889
Do	Secretary	do	Feb. 13, 1889	Mar. 6, 1889
J. M. Rusk	do	Harrison	Mar. 7, 1889	Mar. 6, 1893
J. Sterling Morton	do	Cleveland	Mar. 7, 1893	Mar. 5, 1897
James Wilson	do	McKinley	Mar. 6, 1897	
Do	do	do	Mar. 6, 1901	
Do	do	Roosevelt	Mar. 6, 1905	

POSITIONS FILLED BY THE CIVIL SERVICE COMMISSION.

The following is a list of positions in the U. S. Department of Agriculture for which the U. S. Civil Service Commission hold semiannual, or when necessary special, examinations to provide lists of persons who, having passed the examination for some one of the following positions, have their names placed on lists, or registers, of persons who are eligible for certification by the Civil Service Commission to the Department of Agriculture when requested to do so by the Secretary of Agriculture, and from which certificates, selections, and appointments are made by the Secretary of Agriculture. (July 1, 1907.)

Architectural designer.
Artist.
Assistant chemist.
Assistant dairyman.
Assistant in arboriculture.
Assistant in dairy chemistry.
Assistant in dry land agriculture.
Assistant in grain standardization.
Assistant in soil bacteriology.
Assistant in sugar-beet investigations.
Assistant photographer.
Assistant physiologist.
Blacksmith.
Bookkeeper.
Cabinetmaker.
Carpenter.
Chemist.
Chemist aid.
Chief food and drug inspection chemist.
Civil engineer.
Civil engineer and draftsman.
Civil engineer and superintendent of construction.
Civil engineer student.
Clerk.
Clerk translator (French).
Compositor.
Constructing engineer.
Crop technologist.
Dairy inspector.
Dairyman.
Draftsman.
Editorial clerk.
Electrical and mechanical engineer.
Electrical engineer and draftsman.
Elevator conductor.
Engineer, Department service.
Engineer.
Farmer.
Farmer with knowledge or irrigation.
Farm superintendent.
Fireman, stationary.
Food and drug inspection chemist.
Food and drug inspector.
Forest assistant.
Forest guard.
Forest inspector.
Forest ranger.
Forest supervisor.
Gardener.
Horseshoer.
Horticulturist.
Irrigation engineer.
Irrigation manager.
Laboratory aid.
Laboratory aid and engineer.
Laboratory assistant.
Laboratory assistant in timber tests.
Laboratory assistant in wood chemistry.
Laboratory helper.
Laboratory inspector.
Laborer, unskilled.
Land law clerk.
Law clerk.
Librarian.
Library assistant.
Lithographer's helper.
Meat inspector.
Messenger.
Messenger boy.
Microanalyst.
Observer.
Photographer.
Plumber.
Press feeder.
Pressman.
Printer's assistant.
Proof reader.

Repair man.
Scientific aid.
Scientific assistants, qualified in some one of the following subjects:
(1) Agricultural and commercial statistics, statistical literature, and statistical methods.
(2) Agronomy.
(3) Agrostology.
(4) Animal bacteriology.
(5) Animal husbandry.
(6) Animal pathology.
(7) Biochemistry.
(8) Chemistry, including obligatory questions in general and analytical chemistry and optional questions in organic, physical, physiological, and agricultural chemistry.
(9) Dairy bacteriology.
(10) Dairying.
(11) Economic botany.
(12) Entomology.
(13) Farm management.
(14) Game protection.
(15) Geographic distribution of animals and plants.
(16) Horticulture.
(17) Library science.
(18) Meteorology.
(19) Mycology.
(20) Physiology and nutrition of man.
(21) Plant bacteriology.
(22) Plant breeding.
(23) Plant pathology.
(24) Plant physiology.
(25) Pomology.
(26) Rural engineering, including obligatory questions in the general subject of rural engineering and optional questions in road making, irrigation, and drainage.

Scientific assistant, qualified in some one of the following subjects—Continued.
(27) Seed testing.
(28) Soil chemistry, physical chemistry, and analytical chemistry.
(29) Soil management.
(30) Soil physics.
(31) Soil surveying.
(32) Systematic and economic mammalogy.
(33) Systematic and economic ornithology.
(34) Veterinary zoology.
Also in—
(1) Editing, indexing, and proof reading.
(2) French.
(3) German.
(4) Italian.
(5) Russian.
(6) Spanish.
Skilled laborer.
Stenographer.
Stenographer and typewriter.
Supervising drainage engineer.
Tagger.
Teamster.
Telegrapher.
Testing assistant.
Topographic aid.
Typewriter.
Typewriter and stenographer.
Veterinarian.
Veterinary inspector.
Viticultural superintendent.
Watchman.
Wireman.

REPORT OF THE SOLICITOR.

U. S. DEPARTMENT OF AGRICULTURE,
OFFICE OF THE SOLICITOR,
Washington, D. C., September 15, 1907.

SIR: I submit herewith a report on the work of the Office of the Solicitor for the fiscal year ended June 30, 1907.

Respectfully,

GEO. P. MCCABE,
Solicitor.

Hon. JAMES WILSON, *Secretary.*

DUTIES OF THE SOLICITOR.

The principal duties of the Solicitor of the Department of Agriculture, as outlined in your General Order No. 85, of June 17, 1905, comprehend six distinct divisions of work. He is required—

1. To act as legal adviser to the Secretary of Agriculture.
2. To prepare and to exercise supervision over all legal papers to which the Department is a party.
3. To prepare and to exercise supervision over all communications to the Department of Justice, the various officers thereof, and United States attorneys.
4. To examine and verify the legality, in advance of issue, of all orders and regulations affecting the public promulgated by the Secretary under statutory authority.
5. To represent the Department in all legal proceedings arising under the various laws intrusted to the Department for execution.
6. To prosecute applications of employees of the Department for patents on processes or devices originated in connection with Department work.

LEGAL ADVICE.

During the year several written opinions were rendered to the Secretary upon the legality of proposed Department action. In addition, almost daily, oral and written opinions have been given to the Secretary and to the various chiefs of bureaus upon the legal phases of the appropriation act and the various laws intrusted to the Department for execution.

Several important confidential investigations of a quasi legal character have been conducted, under the direction of the Secretary, of which it is impracticable, if not improper, to give a detailed account.

LEGAL PAPERS.

The business of the Department is steadily increasing, as is shown by the number and variety of contracts entered into during the fiscal year. With this increase arises a proportionate augmentation of the work of the Office, where all these contracts are prepared in the first instance and passed upon before final execution by the Secretary.

DEPARTMENT CONTRACTS.

SUPPLIES.—The preparation of contracts for supplies for the Department, while more or less a routine matter, requires considerable time and a high degree of care. It is the policy of the Department to require, with many of the contracts for these supplies, bonds for faithful compliance with the terms of the instruments. Many questions affecting the validity of these bonds must be passed upon before acceptance, and experience has shown the necessity for watchfulness on the part of this Office to protect the interests of the Department. Despite the plain and explicit directions accompanying each blank contract and bond sent to the contractors, it frequently becomes necessary to return the papers for correction in essential particulars, and even then errors and imperfections are discovered upon a reexamination.

During the last fiscal year the Solicitor prepared and perfected 106 contracts, and, in most instances, accompanying bonds, for the supplies of the Department.

TELEPHONE SERVICE.—The annual contract with the Chesapeake and Potomac Telephone Company for the Department's telephone service was prepared by the Office.

CONTRACTS FOR THE SEVERAL BUREAUS AND OFFICES.

Extension of operations of several bureaus of the Department in various localities in the United States during the year has greatly increased the work of this Office. The Solicitor prepares the necessary instruments from data furnished by the respective bureaus.

BUREAU OF PLANT INDUSTRY.—During the year there were prepared and perfected 184 contracts for the Bureau of Plant Industry for the carrying on of its experiments in various localities throughout the country. Most of these involved, in effect, the leasing of lands for the purposes of the Bureau, necessitating a very careful preparation of the instruments to conserve the interests and success of the Department.

BUREAU OF ANIMAL INDUSTRY.—The contracts for the Bureau of Animal Industry relate almost exclusively to experiments in animal breeding and diseases, conducted in cooperation with stations established and maintained by the States. During the year 32 contracts for these purposes were prepared and perfected.

WEATHER BUREAU.—During the year the Solicitor passed upon 59 contracts for the Weather Bureau, 50 of which were for telegraph and telephone service in connection with its forecasts.

FOREST SERVICE.—During the first session of the Fifty-ninth Congress $15,000 were appropriated for the erection of a wire fence and necessary sheds on the Wichita Forest and Game Preserve, in order to provide a range for the buffalo herd presented to the Government by the New York Zoological Society, the fence and sheds to be erected under the supervision of the Forest Service. This contract involved the building of about 14 miles of fence, and was drawn by the Solicitor early in the fiscal year.

BUREAU OF CHEMISTRY.—Soon after the passage of the Food and Drugs Act of June 30, 1906, the Bureau of Chemistry began active preparations for enforcement of the law. This necessitated the equipment of laboratories in several cities of the United States and the preparation of contracts for this purpose. Of the 26 contracts prepared by the Office for this Bureau during the last fiscal year, almost the whole number were for furnishing and installing such equipment.

OFFICE OF EXPERIMENT STATIONS.—Six contracts were prepared and perfected for the Office of Experiment Stations.

BUREAU OF ENTOMOLOGY.—Twenty contracts were prepared and perfected for the Bureau of Entomology.

OFFICE OF PUBLIC ROADS.—Three contracts were prepared and perfected for the Office of Public Roads.

LEASES.

During the year the various branches of the Department, in furtherance of their operations throughout the United States, entered into 253 leases for office accommodations and facilities for transacting the business of the Department. These were all drawn and perfected by this Office.

BONDS.

Several of the officers and employees of the Department are required to give bond to the United States for faithful and accurate disbursement and account of the funds intrusted to them. Fourteen of these bonds were prepared during the year.

RECAPITULATION OF CONTRACTS AND LEASES.

The accompanying table is a recapitulation of the foregoing contracts and leases prepared in this office during the year.

Table of contracts and leases prepared during the fiscal year from July 1, 1906, to June 30, 1907, inclusive.

Bureau, Division, or Office.	Contracts.	Leases.	Bureau, Division, or Office.	Contracts.	Leases.
Bureau of Plant Industry	184	32	Bureau of Entomology	20	6
Bureau of Animal Industry	32	72	Bureau of Soils	0	3
Weather Bureau	59	103	Office of Public Roads	3	4
Forest Service	1	15	Chief Clerk	0	1
Division of Publications	0	3	Department	107	0
Bureau of Chemistry	26	10			
Office of Experiment Stations	6	4	Total	438	253

Total of contracts and leases 691.

COMMUNICATIONS TO THE DEPARTMENT OF JUSTICE.

TWENTY-EIGHT-HOUR LAW.

During the fiscal year enforcement of the twenty-eight-hour law was prosecuted with much vigor by this Office. The Office handles all the cases arising under this law. Section 4 of the act requires United States attorneys to prosecute all violations of the act reported by the Secretary of Agriculture. The administration of the law is intrusted to the Bureau of Animal Industry, through whose inspectors, stationed throughout the United States, the facts connected with these violations are procured. The reports of these inspectors are referred to the Solicitor. When he determines from the evidence submitted that a violation has occurred he prepares, for the signature of the Secretary, the necessary letter to the Department of Justice, outlining the facts upon which the proper United States attorney is to base his complaint for recovery of the penalty prescribed by the act. There is necessarily considerable correspondence between the Bureau of Animal Industry and the Solicitor in reference to these cases. It is frequently found that the report of the inspector, or the person accompanying the shipment, is too meager, and it becomes necessary to procure a more complete report on points specified by the Solicitor. In order to follow the proceedings in the court, the Department has generally requested the United States attorneys to furnish it copies of all the papers filed in the suits. These pleadings are all referred to this Office. These requests have invariably been complied with promptly and courteously. When the papers reach the Solicitor they are carefully examined with a view to suggestions that may be helpful in the successful maintenance of the suits. A full record of each case referred to this Office is preserved in permanent form and properly indexed.

During the year 677 cases involving violations of the twenty-eight-hour law were transmitted to the Department of Justice through this Office. Eight were dropped for insufficient evidence or for other cause. Judgment was rendered for the Government in 16, resulting in collection of penalties to the amount of $6,750. Six hundred and fifty-three cases were pending at the close of the fiscal year. The appended table shows the details of the 16 cases which resulted in judgments for the Government.

Statistical summary of suits under the twenty-eight-hour law resulting in judgment for the Government during fiscal year from July 1, 1906, to June 30, 1907.

Case No.	Railroad involved.	Judicial district.	Date of judgment.	Penalty assessed.	Costs assessed.
255	Northern Pacific	Minnesota	April	$500.00	.....
275	.....do	.....do	.....do	500.00	.....
287	.....do	.....do	.....do	500.00	.....
303	.....do	.....do	.....do	500.00	.....
372	.....do	.....do	.....do	500.00	$5.32
373	.....do	.....do	.....do	500.00	.....
401	.....do	.....do	.....do	500.00	5.47
424	Rock Island	Kansas	Apr. 13	200.00	21.60
425	.....do	.....do	.....do	100.00	
486	Great Northern	Washington, western district.	May 2	200.00	22.42
546	San Pedro, Los Angeles & Salt Lake.	Nevada	May 27	500.00	33.20
548	.....do	.....do	.....do	500.00	
719	Northern Pacific	Minnesota	April	500.00	.....
720	.....do	Oregon	June	250.00	.....
780	.....do	Minnesota	.....do	500.00	.....
781	.....do	.....do	.....do	500.00	.....

16 cases; fines recovered, $6,750; costs recovered, $88.01.

It will be seen from the foregoing summary that the maximum penalty of $500 was recovered in each of the suits, except four, and in those there were extenuating circumstances connected with the violations.

Needless to state, the collection of the evidence in all of these cases has been a costly undertaking.

ORIGIN OF PRESENT LAW.

It may not be amiss to give briefly the history of the effort to enforce humane treatment of live stock in the course of transportation from one State or Territory to another. The original statute, which was commonly referred to as the twenty-eight-hour law, was enacted by the Forty-third Congress, and became a law by the approval of President Grant on March 3, 1873. It formed, at the time of its repeal, Sections 4386–4390 of the United States Revised Statutes. It prohibited the confinement in cars, boats, or other vessels, for a period longer than twenty-eight consecutive hours, of cattle, sheep, swine, or other animals which were being conveyed from one State to another, without unloading the same for food, rest, and water for a period of at least five consecutive hours, unless prevented by storm or other accidental cause. The penalty for a violation of the statute was a fine of from $100 to $500 for each case. The provision for unloading did not apply when animals were carried in cars, boats, or other vessels in which they could and did have proper food, water, space, and opportunity to rest.

In 1891 Mr. Rusk, then Secretary of Agriculture, distributed thousands of circular notices addressed to all railroad companies transporting cattle within the United States, calling their attention to the provisions of the law, and urging them to arrange their train service accordingly and to provide necessary feeding and watering stations. In 1895 Secretary J. Sterling Morton distributed similar notices. On March 24, 1897, the present Secretary caused a warning circular to be mailed to the railroad companies throughout the United States, and also caused it to be posted in conspicuous places about stock yards and railroad stations. During all this time the carriers paid little, if any, attention to the law. The Department then put special agents on the road to accompany stock trains in order to detect and report violations of the law. A large number of cases were collected by these agents and transmitted to the Department of Justice for prosecution in the Federal courts. On account of difficulty in securing evidence, and in some few cases on account of technical requirements of United States attorneys, only a small number of convictions were secured. In 1905 the Secretary of Agriculture instructed the Chief of the Bureau of Animal Industry to require the inspectors of his Bureau, particularly those inspectors stationed at points where large consignments of live stock were received, to use the utmost diligence in discovering and reporting violations of the law. As a result of these instructions nearly 2,000 cases were reported to the Department; a number of these cases were transmitted to the Department of Justice for prosecution, and more than $10,000 were collected in fines and costs.

Believing it more desirable to secure a reasonable compliance with the law than to mulct the roads in fines, whenever a large number of

alleged violations had been reported against a particular railroad the road was called upon to give the Department satisfactory assurances that the law would be respected in the future, and that no more violations would occur. When these assurances were received, a proportionate number of the cases against that road were sent to the Department of Justice for prosecution, with the understanding that the road in each case would confess judgment and pay the minimum penalty, the rest of the cases being held suspended during the continued observance of the law.

In the fall of 1905, when the ranges were being harvested, it was shown that the yard and chute facilities of the railroad companies were entirely inadequate to unload and care for properly the very large number of cattle then being transported to market. The railroads had assured the Department that the law would be observed in the future. Knowing that the Department was closely watching and reporting each violation of the law as it occurred, they were naturally making every effort to comply with the letter of the law, and were unloading the cattle in miserably equipped pens for food, rest, and water; in many cases they were even unloading them upon the open prairie, to the great detriment and damage of the cattle and to the prejudice of the owners and shippers. In view of these facts, and in accordance with your statement to representative stockmen and railroad officials, it was agreed that the Department would not, at that time, report to the Department of Justice for prosecution those cases in which the time limit fixed by the statute was exceeded by a small margin, when it was apparent that the railroads were doing their utmost to comply with the law, and when it was apparent also that if the cattle were unloaded they would suffer greater hardship than if they were carried on to their destination without being unloaded.

About that time the Secretary conferred with a number of the best informed, most influential, and most heavily interested stockmen of the United States, and also with commission men and others in the cattle trade. These people were unanimously of the opinion that it would be to the advantage of the cattle and of the owners thereof to extend from twenty-eight hours to thirty-six hours the time limit during which cattle might be confined without food, rest, and water.

Based upon a careful observation of the workings of the law, the treatment of the cattle, and the advantage of the shippers and owners of live stock, the opinion was entertained in the Department that if certain other amendments to the law, hereinafter described, should be adopted, the time during which cattle might be confined in cars without food, rest, and water could safely be extended from twenty-eight hours to thirty-six without disadvantage to the cattle.

In this connection it is interesting to note that section 4388, Revised Statutes (this provision being read into the act of June 29, 1906), provided that "Where animals are carried in cars * * * in which they can and do have proper food, water, space, and opportunity to rest, the provisions in regard to their being unloaded shall not apply." It may be that in this provision of the law lies the solution of the question. One western road, which possibly handles more cattle than any other railroad in the world, has provided cars properly equipped and sufficient in number to care for all the business which it handles. However, the question of rest is an unsettled one, because

of the fact that when cattle are loosely loaded to permit them to lie down, and are transported in long trains, they are liable to jamming and injury to a greater extent than when they are more closely packed.

The great western markets for live stock are Chicago, East St. Louis, and the Missouri River towns. The ranges and feed lots are so located that if the railroads give the shippers anything like reasonable service by far the larger proportion of the cattle can be transported to market within thirty-six hours, and this, with a thirty-six-hour limit, should obviate the necessity for unloading the greater part of the cattle. With a thirty-six-hour limit and reasonable speed it is not necessary to unload cattle from any locality more than twice. When market can be reached in thirty-six hours, it is more humane and better for the cattle to carry them through to destination without unloading than to unload them for food, rest, and water at the end of twenty-eight hours.

The foregoing points were all discussed and debated with the railroads, and as a result this Department virtually recommended to Congress the passage of an act containing the following provisions and repealing sections 4386–4390, Revised Statutes:

1. For reasons hereinbefore stated, provide that the time during which animals may be confined in cars without food, rest, and water be extended from twenty-eight hours to thirty-six hours.

2. Provide that the cattle must be loaded and unloaded in an humane manner and into properly equipped pens. (This was a serious omission in the law in force at the time.)

3. Provide that the owner or shipper of the animals may furnish the necessary food if he so desires. Many yard companies had charged most exorbitant fees for supplying feed, and as the law gave a lien on the stock for food furnished, shippers and owners of stock had been in many cases outrageously overcharged.

4. Provide that every common carrier, other than by water, engaged in the interstate transportation of live stock, shall maintain on all stock trains an average minimum rate of speed of not less than 18 miles per hour, from the time when such live stock are loaded upon or into the cars and made part of the train until the train reaches the destination or junction point for delivery to another common carrier, with a deduction for the time necessarily lost in feeding, resting, and watering, and in the unloading and reloading for those purposes, and for such other time as the stock may be delayed by storm or by other accidental causes which can not be anticipated or avoided by the exercise of due diligence and foresight.

In many cases the railroads have not given the shippers the service to which they are justly entitled. It had frequently happened that stock trains had been delayed for dead freight and for trivial causes, and by reason of the large amount of tonnage which one engine is compelled to handle a slow rate of speed had been maintained and stock had been detained upon the road for an unreasonable time. To extend the time during which cattle may be confined in cars without food, rest, and water without requiring a reasonable speed minimum, it appeared to the Department, would not benefit the shipper or result in more humane treatment of the animals. The laws of one and perhaps more of the States require a reasonable speed minimum to be maintained on all trains transporting live stock within the borders of the State.

5. The statute should be broadened to cover practically every common carrier of live stock, including a receiver of any company. The Supreme Court has held in the case of the United States *v.* Harris (177 U. S., 305) that existing law does not include the receiver of a railroad company. At that time a certain railroad, then in the hands of a Federal receiver, was confining animals fifty and even sixty hours without food, rest, and water.

6. The statute should be amended to cover the transportation of animals from a State to a Territory or from a Territory to a State. The United States district court for the district of Kansas held in the case of The United States *v.*

The St. Louis and San Francisco Railroad Company (an unreported case) that the law did not cover a shipment from a Territory to a State, the wording of the statute being "* * * which transports live stock from one State to another."

All of these provisions, with the exception of No. 4, making a provision for a minimum speed limit, were incorporated into the act passed by Congress on June 29, 1906 (34 Stat., 607). The passage of the act was vigorously sought by the live stock and railroad interests and as vigorously fought, in committee and on the floor, by members of the various humane societies throughout the United States. When the bill was passed the humane societies carried the fight to the President and asked him to veto the bill. It was found on reference of the matter to the Department that assurances had been given by representative railroad men throughout the United States that if the time limit were extended to thirty-six hours at the request of the shipper the railroads would be able to obey the law, and would obey it. It was also made apparent that the stockmen generally throughout the United States were in favor of the bill, even though the provision for a minimum speed limit had been omitted. It was believed that it would be possible, if the bill became a law, to secure more humane treatment for cattle in transit, independent of the number of hours involved, by reason of the provisions requiring humane loading and unloading, properly equipped pens, and a proper amount of food and water. In view of the foregoing, the bill was duly signed and became a law. Since that time every effort possible has been made by the Department to secure a compliance with the law, and it is gratifying to state that some of the large railroads of the country have uniformly observed the law. It is true, as an examination of the cases will disclose, that on the other hand, a large number of railroads have disregarded the law. Some of the roads which have persistently violated the law were represented before the Department at the time the matter was before Congress, and their representatives were very strongly in favor of its enactment, claiming that the roads they represented did not wish to be put in the position of lawbreakers, and that if a reasonable statute, such as they conceived the measure then before Congress to be, were passed, the roads they represented would obey it without question.

ATTITUDE OF OFFENDING RAILROADS.

It is apparent, from the pleadings filed by the various railroads, that resort is to be had to every legal technicality to avoid the payment of fines for violations of the law. While it is proper for a defendant to exhaust his defenses, in view of the fact that this legislation was eagerly sought by the railroads, it would perhaps be more seemly, and possibly just as good policy, if the railroads were to concentrate their energies upon an attempt to obey the provisions of the statute.

LACEY ACT.

During the year 8 cases involving violations of the act of Congress of May 25, 1900, commonly known as the Lacey Act, prohibiting interstate commerce in game killed in violation of local laws, were referred through this Office to the Department of Justice. The disposition of these cases is shown in the appended table.

Cases under the Lacey Act referred to Department of Justice during fiscal year from July 1, 1906, to June 30, 1907.

Case No.	Defendant.	Judicial district.	Offense charged.	Disposition of case.
51	Chas. Thompson..	North Dakota.	Shipment of game in unmarked trunks.	Judgment upon demurrer for defendant.
51a	A. R. Spear.....	.....do.....	.....do.....	Do.
88	Wm. Binkley.....	Idaho.....	Shipment of heads, hides and horns of elk killed in violation of local laws and marked as "household goods."	Fined $200; paid.
88	Chas. Purdy.....	.....do.....	.....do.....	Fined $200; sentenced to jail in default of payment.
91	Escanaba Fish Company.	Michigan.....	Shipment of deer killed in violation of local laws and marked as a "barrel of fish."	Pending.
92	Fred Olin.....	Wisconsin.....	Shipment of deer killed in violation of local laws and marked as "hides."	Do.
93	Proudfit & Ormsby.	Colorado	Shipment of prairie chickens as "dressed poultry."	Do.
94	Northern Produce Company.	Texas.....	Shipment of wild ducks as "dressed poultry."	Do.

In cases Nos. 51 and 51*a* the defendants demurred to the information upon the ground that no public offense was stated against them. The demurrers involved a construction of section 4 of the act, which provides:

> That all packages containing such dead animals, birds, or parts thereof, when shipped by interstate commerce, as provided in section 1 of this act, shall be plainly and clearly marked, so that the name and address of the shipper and the nature of the contents may be readily ascertained on inspection of the outside of such packages.

The court held that the word "such" in the first line of section 4 referred to birds which had been killed in violation of local laws, and to birds the export of which was not prohibited by the laws of the State where killed, and that, therefore, as the ducks in question, for aught that appeared in the information to the contrary, were lawfully killed, and as the law of North Dakota prohibited export of ducks, the information did not charge an offense, and the demurrer was well founded. The cases are reported in 147 Fed., pp. 637 and 640.

This is the first case decided by a court, directly construing the meaning of the word "such" in section 4. There were, and still are, among able lawyers, three diverse opinions upon this question. It is held by some that the word refers to all dead wild animals and birds shipped in interstate commerce. Others contend that it refers only to wild animals and birds killed in violation of local laws and shipped in interstate commerce, and still others that it restricts the offense, as held by the court in this case. In view of these three opinions, all advocated by equally respectable authorities, it is unfortunate that the first case requiring the construction of this section should have been decided against the Government.

The cases against Binkley and Purdy (No. 88) created widespread interest, because of the wholesale destruction of elk by these defendants, and further because there was strong evidence that their operations had been conducted largely in the Yellowstone National Park. The result of the prosecutions will, it is hoped, have a deterrent influence upon like-disposed offenders in the future.

of $18,229.57, alleged to be still due it on account of a contract entered into with the Department of Agriculture in June, 1900, for supplying seed for distribution. The Department held that the association had failed to supply a part of the seed required by the contract, had not supplied some of the seed in time, and otherwise had failed to comply with the terms of the contract. The Government, therefore, for its own protection, filed a counter claim for $25,000, alleging nonperformance and fraud in the execution of the contract. This Office assisted in the taking of testimony for the United States and afterwards in the proceedings in the Court of Claims. The case was pending at the close of the year.

Crary, Packer, and Knott *v.* The United States (No. 21428): The claimants in this case asked for a judgment for $9,193 for a consignment of sheep which they had purchased in Mexico and brought into the United States, and which were inspected at El Paso, Tex., by officers of the Department of Agriculture, declared to be infected with disease, and slaughtered by said officers. The case has been pending for several years, a large number of witnesses have been examined for the Government, and every lawful means has been exhausted to supply the attorneys for the Government with all the testimony obtainable to establish the defense to the suit. The Solicitor has, throughout the entire pendency of the suit, cooperated with the Department of Justice in procuring this testimony and in preparing the pleadings in the Court of Claims. The case remained undecided at the close of the year.

Thomas H. Reeves *v.* United States (No. 30015): In May of the last fiscal year the Department of Justice directed a request to this Department for all the facts, circumstances, and evidence in its possession connected with the claim of Reeves (a former statistical agent of this Department) against the United States for the recovery of his salary for the year 1901, which had been disallowed by the disbursing officer of the Department upon the ground that a retired army officer could not receive a salary as an employee of the Department and at the same time receive pay as a retired officer of the Army. The request was referred to the Solicitor, and a full and complete reply was prepared covering the facts and the rulings of the Comptroller of the Treasury, touching the matter. The case was pending at the close of the year.

RENOVATED BUTTER.

In view of the conflict of opinions rendered by the United States district court for the northern district of New York and by the United States district court of Connecticut, construing the provisions of section 5 of the act of May 9, 1902, entitled "An act to make oleomargarine and other dairy products subject to the laws of any State or Territory or District of Columbia into which they are transported," etc., it was very desirable that a decision of the Supreme Court of the United States be had upon the question as to whether the statute and the regulations of the Treasury Department and the Department of Agriculture relating thereto, prohibiting interstate shipment of renovated butter which bore no stamps and caution notices prescribed by the act and regulations, applied to persons other than *manufacturers*. As the law stood at the time of the

rendition of the decision in the case of United States *v.* Bohl (125 Fed., 625), the Government could not appeal from the adverse decision then rendered, hence the impossibility of having the decision reviewed by the Supreme Court. But Congress, by act of March 2, 1907, has provided for an appeal on behalf of the United States on matters of law. Accordingly, in May, 1907, the Department having received evidence of a shipment of unmarked renovated butter by a retail dealer in Jersey City, N. J., to New York City, the facts in the case were transmitted to the Department of Justice with a request for proper action by the United States attorney in New Jersey. The case was in the hands of the United States attorney at the close of the fiscal year.

FALSIFICATION OF ACCOUNTS.

Information having reached the Department that one of the former employees of the Bureau of Animal Industry, in Wyoming, had inserted in his expense account false items, the Solicitor, in June last, prepared a statement of the evidence in the case for transmission to the Department of Justice. The time still remaining in the fiscal year was so short that no conclusive action could be taken before its expiration, and the case was pending at the close of the year.

SUPPRESSION OF CONTAGIOUS DISEASES OF DOMESTIC ANIMALS.

Under the act of May 29, 1884, "An act for the establishment of a Bureau of Animal Industry, to prevent the exportation of diseased cattle, and to provide means for the suppression and extirpation of pleuro-pneumonia and other contagious diseases among domestic animals," four cases were pending or finally disposed of during the fiscal year 1907. The evidence in all but one of these cases had been transmitted to the Department of Justice before the fiscal year began. Case No. 90 was sent to the Department of Justice in February, 1907. In case No. 70 the Government was unable to prove that the defendant had knowledge of the infection of the sheep, and as the proof of that fact was essential to a conviction under the act of 1884 the case was dismissed by the court.

The appended table shows the nature of the offenses charged and the disposition of these cases.

Cases under the act of May 29, 1884, for the suppression of contagious diseases of animals, pending or finally settled during the fiscal year July 1, 1906, to June 30, 1907.

Case No.	Defendant.	Judicial district.	Offense charged.	Disposition of case.
70	R. C. Campbell...	Kentucky, eastern district.	Shipment of 17 lambs infected with scabies from Kentucky to Ohio.	Judgment for defendant, Oct., 1906. No proof of guilty knowledge of infection.
74	J. K. Smith.....	.....do.....	Shipment of 220 lambs infected with scabies from Kentucky to Ohio.	Mistrial, Oct. 19, 190 Continued.
75	T. McClintock & Son.	.....do.....	Shipment of 221 sheep infected with scabies from Kentucky to Ohio.	Plead guilty; fined $100, Oct., 1906.
90	Richards & Roberts.	Wisconsin, western district.	Shipment of 108 sheep infected with scabies from Wisconsin to Chicago.	Pending July 1, 1907.

QUARANTINE LAW AND REGULATIONS.

During the year much attention was given by the Office to the cases arising under the act of March 3, 1905, "An act to enable the Secretary of Agriculture to establish and maintain quarantine districts, to permit and regulate the movement of cattle and other live stock therefrom and for other purposes." A number of these cases came over from the last preceding fiscal year, and were either disposed of during the year or were still pending on July 1, 1907. The preparation of these cases for the Department of Justice and subsequent correspondence with the United States attorneys involves considerable time and care and constitutes an important phase of the duties of the Office. In four of the cases the defendants were fined $100 each. The appended table shows the character of these offenses and the disposition made of the cases:

Cases under quarantine act of March 3, 1905, pending or finally settled during the fiscal year July 1, 1906, to June 30, 1907.

Case No.	Defendant.	Judicial district.	Offense charged.	Disposition of case.
48	John Fort	North Dakota	Movement of stock, not dipped or inspected, from quarantined area in South Dakota to North Dakota.	Indicted November, 1906. Arrested in South Dakota, January, 1907, for transfer to North Dakota. United States attorney reported Jan. 31, 1907, that he was advised by attorney for defendant that he intended to plead guilty.
48	Eugene Fort	do	do	Do.
48a	Wm. Perkins	do	do	Do.
50	E. E. Coffey	Oklahoma	Movement of 91 cattle from Roger Mills County, Okla. (quarantined area), to Texas.	Defendant indicted.
59	Hiram Silers	Missouri, western district.	Movement of 43 cattle from quarantined area in Oklahoma into Missouri.	Plead guilty October, 1906; fined $100 and costs.
59	J. E. Hodges	do	do	Do.
77	John Oleson	Idaho	Movement of 4,500 sheep from Idaho to Oregon without permit and inspection.	Pending March, 1907, awaiting procurement of witnesses for the Government.
79	John Gange	South Dakota	Shipment of about 20 sheep, infected with scabies and uninspected, from South Dakota to Chicago.	Plead guilty Oct. 13, 1906; fined $100.
80	Samuel Sweitzer	do	Shipment of 20 cattle infected with scabies, from South Dakota to Iowa.	Plead guilty Sept. 21, 1906; fined $100.
82	James Caspar	Oklahoma	Movement of 122 cattle, not dipped or inspected, from quarantined area to open area, in the Territory.	Referred to Department of Justice Oct. 29, 1906; pending.
95	J. M. Miller	North Carolina, western district.	Movement of 1 cow, not dipped or inspected, from South Carolina to North Carolina.	Referred to Department of Justice Apr. 17, 1907; pending.

In addition to the cases affecting the Bureau of Animal Industry submitted to the Department of Justice for prosecution, the Bureau referred to this Office during the year 215 complaints against railroads for violation of Quarantine Regulations 14 (*d*) and 21. One hundred and nine of these involved infractions of Regulation 14 (*d*), which requires the officers of transportation companies to securely affix to each side of every car carrying interstate shipments of cattle *from modified* quarantined areas a durable placard not less than

by 8 inches in size, on which shall be printed, in letters not less than 1½ inches high, the words "Southern cattle." One hundred and six involved infractions of Regulation 21, requiring officers of transportation companies to affix to each side of each car carrying interstate shipments of cattle a similar placard, bearing the words "Uninspected cattle" or "Uninspected exposed cattle," as the case may be. The Office in every case took the matter up with the general counsel for the railroad.

It was shown after careful investigation of these cases that the transportation companies had uniformly adopted methods for compliance with these regulations, and the violations were due in the main to accident, and, in a few instances, to misconception of the terms of the regulations. Each company protested its desire to comply strictly with the law and regulations and submitted such extenuating circumstances connected with the infraction of the regulations, accompanied with assurances of special precautions to prevent a recurrence thereof, that it was considered undesirable, at the time, to press the matters through the courts.

The appended table shows the offending railroad and the regulations violated.

Violations of the quarantine regulations by various railroads during the fiscal year ended June 30, 1907.

Name of railroad.	Number of reported violations of Regulation 14.	Number of reported violations of Regulation 21.	Total.
Chicago, Burlington and Quincy	1	0	1
Cincinnati, New Orleans and Texas Pacific	5	0	5
Chicago, Rock Island and Pacific	0	2	2
Chicago Great Western	0	47	47
Cleveland, Cincinnati, Chicago and St. Louis	7	0	7
Denver and Rio Grande	0	1	1
Frisco System	21	1	22
Great Northern	0	8	8
Galveston, Harrisburg and San Antonio	1	0	1
Gulf, Colorado and Santa Fe	1	0	1
Illinois Central	3	5	8
Louisville and Nashville	8	0	8
Lake Shore and Michigan Southern	4	0	4
Minneapolis, St. Paul and Sault Ste. Marie	0	12	12
Missouri, Kansas and Texas	13	1	14
Mobile and Ohio	1	0	1
Midland Valley	11	0	11
Northern Pacific	0	22	22
Nashville, Chattanooga and St. Louis	1	0	1
Oregon Short Line	0	2	2
Oregon Railroad and Navigation Co	0	2	2
Pennsylvania	1	0	1
Pittsburg, Fort Wayne and Chicago	2	0	2
Richmond, Fredericksburg and Potomac	1	0	1
Rio Grande Western	0	1	1
Santa Fe System	3	1	4
Southern	2	0	2
St. Louis, Iron Mountain and Southern	13	0	13
Southern Pacific	1	0	1
St. Louis Merchants' Bridge Terminal	1	0	1
St. Louis, Brownsville and Mexico	1	0	1
St. Louis Southwestern	1	0	1
Wilmar and Sioux Falls	0	1	1
Wabash	4	0	4
Wichita Valley	2	0	2
Grand total	109	106	215

MEAT INSPECTION LAW.

The meat inspection amendment of June 30, 1906, went into force on October 1 of that year. The remainder of the fiscal year was largely consumed in preparation for active enforcement of the law by the Bureau of Animal Industry. However, the circumstances of one violation were transmitted through the Office to the Department of Justice and the matter was in the hands of the United States attorney of Minnesota at the close of the year.

ATTEMPT TO BRIBE LIVE STOCK AGENT OF THE DEPARTMENT.

Some time in April, 1906, George W. Thompson, live stock agent of the Frisco System, at Vernon, Tex., approached one of the live stock agents of the Bureau of Animal Industry with an offer to pay him $50 if he would issue a certificate of inspection for a consignment of cattle from Texas to Kansas, which said cattle had been previously examined by the inspector and found infested with cattle ticks. The offer was refused and the facts in the case reported to the Bureau of Animal Industry and by it referred to this Office. The matter was investigated thoroughly, additional proof was procured, and steps were about to be taken to refer the case to the Department of Justice, when this Office was advised that the agent of the Bureau had taken the matter up with the United States attorney. The case was tried at Fort Worth, Tex., on December 18, 1906, and resulted in the conviction of Thompson, with a sentence of ten days in jail and $300 fine. It is to be regretted that the court saw fit to impose a nominal penalty for so serious an offense.

GENERAL CORRESPONDENCE WITH THE DEPARTMENT OF JUSTICE.

In addition to the specific correspondence relating to the foregoing cases reported to the Department of Justice during the year, the Solicitor prepared and supervised the Secretary's correspondence with that Department touching other and general matters of interest to the Department. This is required of him by the general order of the Secretary heretofore referred to.

In a letter of October 15, 1906, to the Secretary of Agriculture, the Attorney-General requested that thereafter, when the Department desired the opinion of the Attorney-General, the request be accompanied with the written opinion of the law officer of the Department referring to all legislation or decisions, or any ruling, usage, or practice of the Department affecting the question. In accordance with this request several briefs were prepared during the year giving such opinions and detailing the information requested by the Attorney-General upon questions submitted by the Secretary of Agriculture.

ORDERS AND REGULATIONS.

One of the duties assigned the Solicitor by the general order of the Secretary of June 17, 1905, is to examine and verify the legality, in advance of issue, of all orders and regulations affecting the public, promulgated by the Secretary under statutory authority.

MEAT-INSPECTION LAW.

The meat-inspection amendment was approved by the President on June 30, 1906—the last day of the fiscal year 1906. By its terms it went into force on October 1, 1906, during the fiscal year 1907. The act requires the Secretary of Agriculture to make rules and regulations to carry out the provisions thereof. In accordance with this requirement the Solicitor, in cooperation with the officers of the Bureau of Animal Industry, under which the act is directly administered, immediately undertook the preparation of the necessary regulations. In the preparation of these much time was consumed and great care bestowed, to the end that the purposes of the act should be furthered and, at the same time, the interests of the public advanced. Sixty-five regulations under the act were prepared and published during the year, together with several amendments thereto. These were all published as Order 137 of the Bureau of Animal Industry, and amendments thereto.

PURE-FOOD LAW.

In the administration of the food and drugs act of June 30, 1906, frequent inquiries relative to the interpretation of the act are received by the Department from wholesalers, jobbers, and dealers. As these inquiries involve questions of importance and interest to a large number of business houses and persons, the Department has adopted the course of making each line of inquiry the basis of a "food-inspection decision," and publishing the decision in form for general distribution. Thirty-four of these decisions were rendered during the year, in the preparation of which the Solicitor participated.

By General Order No. 111 of the Secretary, of April 25, 1907, creating the Board of Food and Drug Inspection, the Solicitor is designated as one of the three members. The board is required to consider all questions arising in the enforcement of the food and drugs act of June 30, 1906, upon which the decision of the Secretary is necessary; to consider all correspondence involving interpretations of the law and questions arising thereunder; to hold frequent meetings for the prompt report of findings, and to conduct all hearings based upon alleged violations of the said act.

Much time during the remainder of the fiscal year was devoted to the duties imposed by the above-mentioned order. Frequent hearings were held and considerable work was performed incident to procuring enforcement and proper understanding of the law and the regulations made thereunder.

ASSISTANCE IN LEGAL PROCEEDINGS.

During the year assistance has been rendered the attorneys for the Department of Justice in taking testimony and in preparing briefs in several Department cases. Consultations have also been held with the various United States attorneys in whose districts Department cases were to be tried, assistance rendered with the pleadings, and other duties performed in connection with the trials. Occasion is here taken to say that the cases in which the Department has been interested have received efficient, careful, and vigorous attention from the United States attorneys. The suggestions of the Department have been courteously received, and in many cases accepted.

PATENTS FOR DEPARTMENT EMPLOYEES.

The order of the Secretary of Agriculture of May 8, 1905, provides that—

> * * * When any employee of the Department makes any new and useful discovery or invention of any machine, device, or process connected with the work of the Department, through the expenditure of Government time and Government money, you are directed to cause a patent to be applied for on the said discovery or invention, through the law officer of the Department. The patent will be taken out in the name of the inventor, without any expense to him, and will allow to any citizen of the United States the use of the patented article or process without payments of royalty.
>
> All employees of this Department are prohibited from patenting any device or process or discovery connected with the work of the Department except in the manner above described.

It will be seen from this order that the public is the direct beneficiary of all patents taken out by Department employees under its terms.

The Committee on Expenditures in the Department of Agriculture, in their report to the House of Representatives at the last session of Congress, very heartily indorsed the course the Secretary had taken in this connection and commended his action to the other Departments of the Government. Under the terms of the general order of the Secretary of June 17, 1905, requiring the Solicitor to prosecute applications of employees of the Department for patents, five such applications were prepared during the fiscal year. It will be seen from the appended table that three patents were granted, one was disallowed, and one was pending at the close of the year.

Applications for patents prosecuted by the Solicitor, for Department employees, during fiscal year ended June 30, 1907.

Applicant.	Bureau or office.	Invention.	Disposition of application.
A. S. Cushman	Public Roads	Process for extracting potash from feldspathic rocks.	Patent granted Apr. 30, 1907 (No. 851922).
Webber and Boykin	Plant Industry	Process for sizing or coating lint and fuzzy material on cotton and other seed.	Patent disallowed, June, 1907.
Chester E. Gray	Animal Industry	Apparatus for determining water in butter.	Patent granted June 7, 1907 (No. 343281).
Brown and Duvel	Plant Industry	Apparatus for rapid determination of the moisture content of certain grain and other similar substances.	Patent granted Mar. 8, 1907 (No. 848616).
A. S. Cushman	Public Roads	Process for preventing the rusting of iron and steel.	Pending.

COMMITTEE ON PERSONNEL.

In General Order No. 80, October 2, 1905, the Secretary designated the Solicitor as one of the three members of the committee on personnel for the Department. Under this order it is the duty of the committee to consider and investigate all charges of dereliction of duty and actions prejudicial to the interests of the Department by employees thereof, and it has power to summon any employee as a witness.

During the year several such cases were investigated by the committee, and its findings reported to the Secretary.

PUBLIC ADDRESSES.

Before concluding this report it seems proper to mention two addresses delivered by the Solicitor during the year, touching the work of the Department under the meat-inspection law and the cattle quarantine law.

One was delivered at Nashville, Tenn., on December 6, 1906, at the conference of Federal and State representatives to consider plans for eradication of the cattle tick. The address was upon the legal side of the tick-eradication problem and was later published in Bulletin No. 97 of the Bureau of Animal Industry.

The other was delivered on December 18, 1906, before the New York State Breeders' Association, at Syracuse. The subject of the address was "The new meat-inspection law and its bearing upon the production and handling of meats," and was intended as a simple but comprehensive description of the law and its enforcement. It was afterwards published by authority of the Secretary as Circular No. 101 of the Bureau of Animal Industry for general distribution.

STATE OF OFFICE WORK.

The work of the Office is in good shape and up to date. The personnel is efficient, painstaking, and ready to work as many hours per day as are necessary to keep up with the work. During rush periods it has not been unusual for employees of the Office to work until midnight. This has been done cheerfully and willingly. The greatly increased amount of legal work incident to the growth of the Department, and more particularly to the enforcement of the meat-inspection and pure-food laws, will naturally call for an increased number of employees in the Office of the Solicitor.

REPORT ON NEW BUILDING OPERATIONS.

U. S. DEPARTMENT OF AGRICULTURE,
OFFICE OF CHAIRMAN OF BUILDING COMMITTEE,
Washington, D. C., November 4, 1907.

SIR: I have the honor to submit herewith a brief statement covering the work for the past year on the building operations for the Department of Agriculture authorized by the act of Congress approved February 9, 1903.

Respectfully, B. T. GALLOWAY,
Chairman of Building Committee.

Hon. JAMES WILSON, *Secretary.*

SUPERVISION OF THE WORK.

The building work for the Department of Agriculture has continued in charge of the building committee appointed by the Secretary of Agriculture, which consists of Mr. Gifford Pinchot, Forester of the Department, Dr. A. C. True, Director of the Office of Experiment Stations, and the writer, who, being designated as chairman of the committee, has in such capacity made all necessary recommendations, prepared requests for authorizations, requisitions, etc., and attended to the necessary details connected with the work.

The general construction work has been continued in charge of Maj. John Stephen Sewell, Corps of Engineers, U. S. Army, and the mechanical equipment work in charge of Messrs. R. Barnard Talcott and S. Franklin Gardner, mechanical engineers. Mr. J. G. Palmer, inspector, has been in immediate charge of the construction work under Major Sewell, and has been assisted in the inspection work by Messrs. L. F. Eaton, H. W. Saunders, J. T. Dent, John McGowne, and W. D. Sutherland.

GENERAL CONSTRUCTION WORK.

The general construction work is being executed, as stated in previous reports, by Ambrose B. Stannard, of New York, under contract dated December 14, 1904. At the present time in Laboratory A, or the east section of the building, most of the finish has been installed, and the work remaining to be done consists for the most part of marble bases in corridors, toilet-room marble, and ornamental ironwork for elevator inclosures and stairways. Laboratory B, or the west section of the building, is not as near completion as the east section. The plastering in this section, however, is approximately 85 per cent completed, and the interior finish is now being started.

The contract time for the completion of the building expires November 14, 1907, and it now appears that the contractor is two or three months behind with his work. This delay will cause much inconvenience to the Department, although the liquidated damages to the Department during this period are chargeable to the contractor.

MECHANICAL EQUIPMENT WORK.

The contract for the electric wiring and conduit systems was awarded to the Watson-Flagg Engineering Co., of New York, under date of January 20, 1906. This contract covers the entire conduit and wiring systems for the electric light and power circuits, an intercommunicating telephone system, and an electric clock system. This work has been satisfactorily installed as far as the condition of the buildings will permit.

The contract for the elevator installation was awarded to the Otis Elevator Company, of New York, under date of January 22, 1906. This contract covers the installation, complete in every detail, of six electric elevators, three in each section of the building, which have been installed as fast as the condition of the building would permit, and the work is now practically completed.

The heating and ventilating and special piping contract was awarded to Charles H. Sanborn, of Boston, Mass., under date of February 1, 1906. This contract covers the complete heating, ventilating, and special piping systems, which are now entirely installed except for a few details which can not be executed until the general construction work has progressed farther.

The contract for the construction of the power house was awarded to Ambrose B. Stannard, of New York, under date of April 6, 1907. This contract covers the construction of a temporary one-story brick building, approximately 110 feet long by 56 feet wide, designed to house appliances of the power plant equipment, together with concrete tunnels connecting the power house with the subbasements of sections A and B of the new building and the construction of an 84-foot stack. This contract is practically completed.

The contract for the power-plant equipment work was awarded to S. Faith & Co., of Philadelphia, Pa., under date of April 6, 1907. This work includes the boiler plant, pumps, heaters, tanks, all pipes connecting the various parts of the apparatus, and piping in the tunnels from the power house to the connections with the special piping and heating systems in sections A and B of the new building. Considerable delay has been experienced by this contractor in securing the shipment of approved appliances. Most of the appliances are now at the building, however, and the work is rapidly nearing completion. The entire plant will be ready for use by the time the general construction work is completed.

The contract for lighting fixtures for the building was awarded to the Elmer H. Catlin Company, Washington, D. C., under date of June 6, 1907. This contract covers the furnishing and installing of all pendent and bracket lighting fixtures for the entire building. Drawings and samples of these fixtures have been approved and the fixtures are being delivered at the building, and will be placed as soon as desired.

FINANCIAL STATEMENT.

APPROPRIATIONS.

March 3, 1903	$250,000
March 3, 1905	700,000
June 30, 1906	300,000
March 4, 1907	250,000
	1,500,000

Expenditures and liabilities.

Contracts, salaries, etc.	Nature of work.	Expenditures.	Liabilities.	Total expenditures and liabilities.
Contracts:				
R. J. Beall Construction Co.	Sewer	$6,898.26		$6,898.26
J. T. Walker	Superintendent's quarters	1,377.85		1,377.85
Ambrose B. Stannard	New building	1,000,925.64	$167,810.35	1,168,735.99
Do	Power house	19,843.66	4,952.34	24,796.00
Chas. H. Sanborn	Heating and ventilating	49,872.61	24,565.39	74,438.00
Watson-Flagg Engineering Co.	Electrical work	15,376.99	4,880.01	20,257.00
S. Faith & Co	Power plant	28,471.50	31,561.46	60,032.96
Otis Elevator Co	Elevators	12,637.50	12,637.50	25,275.00
Elmer H. Catlin Co	Lighting fixtures		9,480.00	9,480.00
Rankin, Kellogg & Crane	Architects' services	53,466.68	1,760.32	55,227.00
Salaries: Engineers, inspectors, etc.		32,142.25	4,893.82	37,036.07
Miscellaneous: Authorizations, requisitions, travel, etc.		10,857.75	1,035.00	11,892.75
Total		1,231,870.69	263,576.19	1,495,446.88

Total appropriations	$1,500,000.00
Total expenditures and liabilities	1,495,446.88
Total available balance	4,553.12

INDEX.

Page.

Accounts and Disbursements Division, growth, 1881–1907 754
publications, 1907 364
report of Chief 507–540
work, 1907, review by Secretary 103–105
Department, growth in importance and in work of keeping 507–508
falsification, case 770
fiscal year 1905, final closing 512–513
National forests, statement of refunds to States, work of Office, etc. . 355–356
Acidity, cream, effect on keeping quality of butter 244
Actinidia, introduction, Chico, Cal., garden 338
Adams fund, work 116, 651–655
Adulteration seed, decrease 57, 329
Aeroplanes, ascensions, meteorological observations 23, 143–146
Agave tequilana investigations 327
Agents, statistical, special field 113, 635
State 113, 636, 642
Agricultural census, quinquennial, recommendation 642
education, extension work, recommendations 120–121, 658–659
colleges and schools, work of Experiment Stations Office 656–658
education, foreign countries, methods of extension 121, 663
progress, information, publications 656
Experiment Stations, relations of Plant Industry Bureau 261
explorations, 1907 330–331
production, United States, review 9–23
productions, foreign countries, statistics 114, 639
school farms, assistance of Soils Bureau 438
statistics, growth and development 629–631
Agriculture, Commissioners, length of service 757
Department, appointments and changes, summary 741–743
cases in Court of Claims 768–769
cooperative lecture tour, object, work 728
deaths, names of persons 742
employees, increase since 1867 138
establishment 749–758
expenditures, investigation 508
growth, 1862–1907 749
new buildings 509
origin, historical data 745–749
extension work 662
research, lack of workers 117, 653
Secretary, Office, growth, 1881–1907 750
report, 1907 9–140
teaching in colleges and schools, growth 119, 656
Agronomic investigations, Arlington Experimental Farm 296
Agrostemma githago, poisoning chickens 223, 307
Agrostology publications, 1907 601
Air, upper, work at Mt. Weather Observatory 23–24, 143–146
Alabama cooperative soil survey work 425
demonstration farms 340
soil surveys, 1907 414
Alaska experiment stations, work 121–122, 671, 673–677
game preservation 103
protection 495

Page.
Alcohol, denatured, investigations Plant Industry Bureau 262
determination in medicinal agents 393
Alfalfa, adaptation in cotton States, study 429
Arabian, large yield 48, 324
cultivation, extension 12, 47
extension, inoculation experiments 324
Grimm, identity with sand lucern 48
importance and value 12
Peruvian, life history, study 45, 280
propagation by vegetative methods, experiments 324
seed production, encouragement 47, 324
Siberian, introduction, value 324
soil requirements, study 429
Alfalfas, new, introduction 43, 280
Algae pollution, work in Canal Zone 55, 287
Alkali, reclamation by flooding and underdrainage 430
resistant plant breeding work 272–274
Amarillo experimental farm, Texas, cereal work 314
Animal diseases, scientific investigations 212–226
husbandry work, Bureau Animal Industry 35–36, 236–242
Industry Bureau, growth, 1885–1907 750–751
1907, employees and expenditures 191–192
publications, 1907 ..... 255, 565–570
report of Chief, 1907 191–255
work, 1907, review by Secretary 27–40
nutrition experiments with respiration calorimeter 36, 240
physiological investigations, laboratory work 397
products, exports, value, 1907 21
quarantine regulations 206–212, 372, 771–772
Animals and animal products, imports, value, 1907 22
export, inspection 29, 207
farm, sold and slaughtered, value, 1907 20
geographic distribution 490
grazing, National forests, number and value, 1907 ..... 64, 372
import, inspection, and quarantine 31, 208–210
live, exports, value, 1907 21
number inspected before and after slaughter 27, 200
wild, autopsies, diseases causing death 221
Anona spp., grafting cherimoyer, experiments 337
Ant, fire, enemy to cotton-boll weevil, value 448
Texas, enemy of boll weevil 87
Anthracnoses, fruit, study 267
Anthrax symptomatic. *See* Blackleg.
Apiaries, inspectors, meetings, proposed work, etc 472–473
Apiculture, investigations 472–475
Appalachian Mountains, section, soil utilization for fruit growing 428
Apple, Arkansas planting, note 414
diseases, control 41, 266
spraying demonstrations 266
Apples, adaptability, studies 293
marketing methods 55, 289, 294
Appointment Clerk, report 741–758
Appropriation, estimate for 1909 104
for 1907, amount, disbursement 105
Forest Service 346–347
Plant Industry Bureau, 1907 257
Statistics Bureau, 1907 636
Appropriations, Department, discussion 508–509
estimates, tabular statement 514–516
fiscal year 1907, table 510
increase since 1839 103
statistical work, 1863–1907 631
1839 to 1907, recapitulation 540
1839 to 1907, tabular statement 519–540
Arabian alfalfa, large yield 48, 324
Arboriculture, dry-land 280
Areas, soils surveyed and mapped, 1907, cost per square mile 411–413

Page.
Arid lands, plants suitable 273
soil utilization study 427
region, drainage, remarks 705
Arizona date gardens 45, 278
Yuma crop experiments 322
Arkansas demonstration farms 340
drainage work, review 710
soil surveys, 1907 414
Arlington Farm, fertilizer tests, Soils Bureau 438
work, 1907 ..... 58, 295–298
ARNOLD, JOS. A., report as Acting Editor 541–627
Ash constituents of food, study 693, 698
Asparagus, rust-resistant, breeding 52, 277
Assaying drug products, methods 393
Autopsies, wild animals, diseases causing death 221
Avian tuberculosis, study 218–219

Bacilli tubercle, butter 216, 233
virulence, mode of transmission 216, 233
Bacillus enteritides, finding in fowls 224
necrophorus, cause of necrotic dermatitis in sheep 222
Bacteria, nodule-forming, distribution 54, 286
relation to fertility 54, 286
Bacterial diseases, use for destruction of mammal pests 487
Bacteriological-chemical investigations, Washington laboratory 398
Bacteriology, soil, work 54, 286
Bacterium avisepticum, cause of fowl cholera 224
Balance unexpended, Department of Agriculture, 1905 106
Balances, unexpended, 1839 to 1907, recapitulation 540
tabular statement 519–540
Bamboo culture, Chico, Cal., garden 338
introductions 44, 333
Banana culture, extension, Hawaii 678
Barley, malts, investigation 397
production and value, 1907 16
Barleys, malting, investigations 332
BARNETT, CLARIBEL R., report as Librarian 645–648
Barograph, mercurial, completion and testing 170
Bean, horse, value on arid lands 273
Beaver farming, remarks 501
Bee culture 94
investigations 472–475
proposed work 481
diseases, investigations by Entomology Bureau 472–475
names, decisions 472
proposed work 481
study 94
keeping, Hawaiian Islands, studies by D. L. Van Dine 475
Beef production in South 36, 241
Beet seed. *See* Seed, beet.
sugar, insect enemies, investigations 465–466
investigations 56, 308–312
Beets, breeding, high grade 308–310
seed, siloing 310
selection for breeding 310
sugar, area, extension 311
cultural methods 311
diseases 311
fertilizers, experiments 311
value to agriculture 11
BENNETT, J. B., report as Appointment Clerk 741–758
Bermuda onion, successful culture, Texas, note 421
onions, investigations, seed production 300
Bibliographical work, Experiment Stations Office 669
Big Horn Basin, irrigation 710
Bighead sheep, study 308

Page.
Biochemic division, Animal Industry Bureau, work, 1907 226–230
Biological Survey Bureau, growth, 1887–1907 753
work, 1907, review by Secretary 96–103
publications, 1907 ..... 499, 570–571
recommendations 505
report of Chief 485–505
routine work 498
Bird migration, study 492
protection, cooperative work 103
refuges, proposed work 504
reservations, discussion 494–495
maintenance 102
reserves, trespass 768
Birds, boll-weevil eating 97
economic value 96
examination of stomachs, importance and results 488–489
food, study 500
foreign, entry, regulations 101
geographic distribution 490
identification, note 492
importation, supervision and control 493
insectivorous, means of increase, note 490
relation to fruit raising 97
scale-eating, investigations 97, 490
study proposed 502
useful, decrease in United States 486
water, suggestion for preservation 501
Bison. *See* Buffalo.
Black Hills National Forest, insect investigations, work of Entomology Bureau 457
Blackhead, turkey disease, study 235
Blackleg vaccine, distribution, results 34, 225–226
Black-rot, grape, control, study 267
Blight, peach, control, California 42, 266
pear, eradication, study 41, 265
Board of Trade, National, reference to Statistics Bureau 643
Bobwhite disease, study, Animal Industry Bureau 33, 221
Boll weevil, control, destruction of cotton stalks, experiments 445
field experimentation 88, 445–446
usefulness of birds 97
work of Entomology Bureau 87–89, 444–448
destruction by birds 489
enemies, parasite and other 87, 447–448, 489
investigations, proposed work 480
region, farmers, help by Bureau Plant Industry 58, 339–341
Bollworm, cotton, work by Entomology Bureau 449
Bordeaux mixture, control of peach blight 42, 266
spraying tropical fruits 336
Borer, peach. *See* Peach borer.
Botany publications, 1907 601
Breeding beets, high-grade 308–310
cotton, wilt-resistant varieties 264
investigations, general 239
live stock, work 35–36, 236–238
plant, Alaska 675
wilt-resistant plants 264
Breton Island, bird reservation, remarks 495
Brome-grass, success on Great Plains 325
Brown-rot, peach and plum investigations 267
Brown-tail moth. *See* Moth, brown-tail.
Brush, National Forests, disposal 366–367
Buckwheat, production and value 18
Buffalo pasture, establishment 354
Wichita National Forest 71
Building, new Department, mechanical equipment work, awarding of contracts 140, 778
report 777–779

Page.
Buildings, dairy, plans, and blueprints sent out by Department..... 254
Mount Weather, construction, cost..... 179–181
new and rented..... 509, 514
rental, District of Columbia, 1907..... 105
rented, Weather Bureau..... 178–179
Bulbs, distribution..... 334
work, transference to Pacific coast..... 300
Bureau, Animal Industry; Chemistry; Entomology, etc. *See* Animal Industry; Chemistry; Entomology, etc.
Butter analysis, Chemistry Bureau..... 389
fat, prices paid by creameries, different localities..... 252, 253
fishy flavor, investigations..... 244
inspection..... 39, 251, 253
investigations, flavor, sweet-cream churning..... 38, 244–246
keeping quality, relation to acidity of cream..... 244
moisture determination, method, invention..... 38, 245
quotations, value to farmers, desirability..... 254
renovated. *See* Renovated.
tubercle bacilli..... 216, 233

Cacao culture, Porto Rico..... 686
fungus disease investigations, Porto Rico..... 686
seedlings planting, Hawaii Experiment Station..... 678
Cage-bird traffic, remarks..... 98, 496
California, biological survey work, notes..... 492
Chico garden, resistant grape stocks, study..... 293, 295
plant introduction garden, work, 1907..... 338–339
date gardens..... 45, 278
drainage work, review..... 711
flood, 1907, service of Weather Bureau..... 160
grape soils, study..... 430
irrigation work..... 706–707
nutrition investigations..... 690
oranges, decay in shipping, study..... 288–291
peach-blight control..... 42, 266
soil surveys, 1907..... 415
vineyards, cooperative, work, 1907..... 292
Calorimeter respiration, use in animal nutrition experiments..... 36, 240
nutrition investigations..... 124, 690, 698
Calosoma sycophanta, enemy to gipsy moth, introduction..... 454
Calves, tuberculous infection by milk from diseased cow..... 234
Camphor industry, establishment..... 57, 304, 305
Canada, game laws..... 496
Canadian animal quarantine regulations..... 207
Canal zone, reservoir treatment for algæ pollution..... 55, 287
Canals, lining to prevent loss of water..... 701
Canaries, pseudotuberculosis, study..... 218
Canned goods, investigations..... 387
meat products, changes, investigations..... 227
Canning vegetables, household methods, study..... 692
Capri figs, introduction and breeding..... 281
Caramel in vinegar, fuller's earth test..... 385
Carbolic acid and liquor cresolis compositus, relative value..... 229
Cassava, alcohol study..... 394
Catalogue, card, library, work..... 645
Cattle breeding, Alaska..... 677
condemned, indemnity to owners, recommendation..... 196
feed investigation, Chemistry Bureau..... 390
imported, inspection, numbers..... 209–210
mange, eradication, inspections, dippings..... 30, 206
raising, Alaska..... 675
tick. *See* Tick, cattle.
tuberculin tests..... 32, 216–218, 235
tuberculous, offspring, rearing on pure milk..... 217
vaccination for blackleg, results..... 225
Census Bureau, cooperation with Forest Service, in census standing timber.
quinquennial, agricultural and live stock, recommendation.....
Central *American cottons*, weevil resistant.....

85
6A2
28A

Page.
Cercospora beticola, control by spraying 312
Cereals, growing and maturing, Alaska 676
production and value, 1907 18
Cheese analysis, Chemistry Bureau 389
cheddar, investigation 246
investigations, Animal Industry Bureau 38, 246–247
nutritive value, investigations 124, 688, 693, 698
soft, investigations 246
statistics, collection 254
Swiss, investigations 247
Chemalali olive introduction 281
Chemical laboratory work, Soils Bureau 434
Chemist, report, 1907 381–409
Chemistry Bureau, clerical work, summary 400
cooperation with Plant Industry Bureau 385, 390, 392, 398
growth, 1881–1907 752
proposed work, various divisions 401–409
publications, 1907 ..... 400–401, 571–573
report of Chief, 1907 381–409
work, 1907, review by Secretary 71–74
Cherimoyer grafting experiments 337
Cheyenne Irrigation Extension Farm, work 709
Chicago, request for truck-soils survey, proposed work 440
Chicken cholera, study 224
tuberculosis, study 218
Chickens, poisoning with corn cockle 223, 307
Chico plant introduction garden work, 1907 338–339
Chlorin, use in disinfecting sewage 287
Chlorotic diseases, fruit trees 266
Chocolates, analysis, studies 385
Cholera, chicken, study 224
hog, investigations and experiments 32–33, 227–228
prevention by selective breeding, experiments 228
vaccination with immune serum 33, 227–228
pigeon, study 224
Citrange, breeding and use 282
value as substitute for lemon 282
Citrus fruits, hardy, life history, studies 46, 282
trees, fumigation with hydrocyanic acid gas, proposed investigations 479–480
new varieties, distribution 334
windbreaks, Porto Rico 685
Civil Service Commission, positions filled in Agricultural Department 757–758
Claims, invalid, contests, National Forests 346
CLARK, C. C., report as Acting Chief of Bureau of Statistics 629–644
Climatological publications, Weather Bureau, 1907 162–165
Service, Weather Bureau, 1907 160–165
Climatology, marine, tabulation, Weather Bureau 168
United States, bulletin by Alfred J. Henry, note 165
Clover, Orel, experiments, seed production 279
Clovers, life history, investigations 279
new, introduction 43, 279
Coal-tar dips for sheep 34, 229, 232
Coastal Plains, soils study, proposed work 440
Cockle, corn, poisoning chickens 223, 307
Cocoanut bud rot, study, control 263
Cocoas, analysis, studies 385
See also Cacao.
Cocoons purchased by Department 477
Codling moth. *See* Moth, codling.
Cod-liver oil examination, drug laboratory, Chemistry Bureau 392
Coffee experiments, Porto Rico 684
imports, value, 1907 21
Cold storage, effect on food, study, Chemistry Bureau 385
Coli bacillus, cause of quail disease 221
Colleges, agricultural, courses for scientists, necessity 117, 653
growth of movement 118–119, 656–658
with Experiment Stations, Association, educational work 657

Page.
Colletotrichum glæosporioides, study, Miami subtropical laboratory..... 336
Colorado, biological survey work..... 492
drainage work, review..... 711
irrigation experiments..... 707
Commissioners, Agriculture, length of service..... 757
Committee on Department Methods, reference to Statistics Bureau..... 643
Computing section, Forest Service, work..... 374
Congressional distribution, Farmers' Bulletins..... 106, 543
seed..... 58, 534
publications..... 562–564
Connecticut nutrition investigations, bulletins..... 690
Storrs Experiment Station, cooperation in cheese investigations. 38, 246
tobacco investigations..... 270
Contagious diseases, animal, control, inspection, quarantine..... 30, 203–206
violation of law for suppression, cases..... 770
Contracts, building, awarding..... 778
leases, bonds, etc., work of Solicitor..... 761
supplies, examination, Chemistry Bureau..... 74, 393
Cooperation, irrigation, California contribution..... 706
nutrition investigations..... 123–125, 689–694
soils work, Alabama and other States..... 425
Copper Center Station, Alaska, work, 1907..... 676
sulphate, use in algæ eradication..... 287
disinfecting sewage..... 287
Corn breeding, seed improvement..... 49, 274–276
Central American varieties, acclimatization..... 285
early varieties, on unirrigated lands, in rotation with wheat..... 275
imported strains..... 276
investigations and breeding..... 274–276
production and value, 1907..... 14
region stations, Weather Bureau, 1907..... 161
seed selection, results..... 274
preservation methods..... 276
soils, study, Soils Bureau..... 429
sweet, for canning and table use, improvement..... 275
varieties, adaptation..... 275
Correspondents, Weather Bureau, by States..... 163
Corrosion of iron, investigation by Roads Office..... 136
Cotton, arid lands..... 273
Cotton boll weevil. *See* Boll weevil, cotton.
culture farms, boll-weevil section..... 339–341
types for weevil resistance, description..... 284
diseases, control, study..... 263
drought resistance, studies..... 285
drought-resistant varieties..... 284
early maturing varieties..... 270
stand, insuring..... 50
exports, value, 1907..... 21
improvement work..... 270
machinery, improvement..... 270
production and value, 1907..... 15
table prepared by Statistics Bureau..... 639
world, 1907..... 15
region stations, Weather Bureau, 1907..... 161
Weather Bulletin, scope..... 162
reports, special..... 110, 632
seed distribution..... 334
products, feeding to hogs..... 240
selection for breeding..... 270
soils, study by Soils Bureau..... 428
transportation, cost..... 16
Cottons, classification, study..... 328
Egyptian, acclimatization..... 51, 273
weevil-resistant, breeding..... 50, 284
Cowpea culture, improvement..... 48, 325
Cowpeas, nutritive value..... 608
wilt-resistant, breeding..... 284

Page.
Coyotes, fence, proposed experiments..... 500
prevention of sheep killing, by fencing..... 486
Cranberry diseases, control, study..... 267
Cream acidity, effect on keeping quality of butter..... 244
sweet, churning experiments..... 38, 245
Creameries, classes, conditions..... 251–254
records keeping, importance and value..... 250
tubercle bacilli..... 215
Creamery investigations, Bureau Animal Industry..... 39, 249–251
Creams, ice, examination, Chemistry Bureau..... 389, 399
Creosote, coal-tar, dips for sheep..... 34, 229, 232
Creosotes, use in preserving marine timbers, studies, etc..... 379
Cresol dips for sheep..... 34, 229
Cresolis compositus liquor and carbolic acid, relative value..... 229
Crop production, average per acre, comparison Europe with United States.. 663–665
Reporting Board, personnel, duties..... 634
methods..... 109, 631–632
reports, methods of issuing..... 112, 635
preparation..... 634
revision..... 638
scope, transmission, and preparation..... 110–112, 632–635
transmission, special precautions..... 634
rotation experiments, Soils Bureau at Arlington Experimental Farm... 295
removal of harmful substances in soil..... 77, 433, 434
statistics, growth and development..... 108–109, 629–631
yield per acre, relation to agricultural education extension..... 665
zones, remarks..... 491–492
Cropping systems for stock farms..... 60
Crops, chief production, United States, 1907..... 14–19
damage by deer, note..... 497
diversification, encouragement..... 60
field, alkali-resistant, work..... 272
drought-resistant, breeding work..... 273
new, introduction..... 13, 43–44, 332
production, 1907, summary..... 19
Crown-gall diseases, study..... 42, 268
study..... 263
Cuban census, note on taking, Department statistician..... 629
Curculio, plum, investigations..... 460
Cyamopsis tetragonoloba, introduction and experimental planting..... 326
Cysts, intestinal, gas, hogs, study..... 222

Dairy buildings plans, blueprints..... 40, 254
cattle, condemned, indemnity to owners, recommendation..... 196
division, Animal Industry Bureau, work, 1907..... 242–255
farms, water supply, examination..... 229
industry work, Animal Industry Bureau..... 37–40, 242–255
inspection by Department..... 32, 39, 248
laboratory, Chemistry Bureau, work, 1907..... 389
products, analysis methods, study..... 389
exports, value, 1907..... 21
imports, value, 1907..... 22
investigations..... 244–248
value, 1907..... 20
comparison with corn and all cereals..... 20
records and tests..... 37, 40, 244
work extension, Jamestown Exposition..... 40, 249
Dairying opportunities, Mississippi prairie lands, note..... 417
Southern, improvement..... 37, 242–243
States, assistance of Department..... 243
work, Alaska..... 675
Dairymen, agreement in regard to treatment of tuberculous cattle..... 217
Damping-off diseases, forest nurseries, study..... 268
Date gardens, California, Arizona, and Texas..... 45, 278
cooperative, establishment..... 278
palm culture, conditions, 1907..... 45, 278

Page.
Dates, injurious effects of moisture in air produced by evaporation..... 153
Deer, distribution, etc..... 497
Deglet Noor date ripening, California..... 279
Delaware, swamp-land study..... 712
Demonstration farm, irrigation..... 708
farms, boll-weevil section..... 339-341
Dendrology, proposed work..... 350
section, duties, purposes, etc..... 345-350
special studies..... 349
Departmental service, extracts from laws..... 744-745
Dermatitis, necrotic, sheep, study..... 222
Dietary study, aged women..... 694
mountain families, Tennessee..... 694
Digestibility, food, investigations, importance..... 687-689
Dikes, damage by rodents..... 502
Dipping outfit for cattle-tick eradication..... 205
Dips, sheep, official use..... 34, 229
stock, experiments..... 229
Directory, card, teachers and investigators..... 657
Disbursements and Accounts Division, growth, 1881-1907..... 754
work, 1907, review by Secretary..... 103-105
fiscal year 1907..... 510
1839 to 1907, recapitulation..... 540
tabular statement..... 519-540
See also Accounts.
Disbursing agents, special..... 509
Disease, insects carrying to man and animals..... 96
Disease-resistant potatoes, breeding..... 264
Diseases, animal, causes for condemnation, meat..... 201
contagious, control, inspection, quarantine..... 30, 203-206
scientific investigations..... 212-226
apple, control..... 41, 266
bee, study..... 94
cotton, control, study..... 263
crown gall, study..... 42, 268
nematode, study, Miami subtropical laboratory..... 335
parasitic, work, Bureau Animal Industry..... 34, 230-232
plant, study, summary..... 265
tomato, study, Miami subtropical laboratory..... 336
tropical fruits, study, Miami subtropical laboratory..... 336
District of Columbia, food inspection, Chemistry Bureau..... 389, 399
milk supply investigations..... 32, 39, 217, 218, 248
Diversification farms, encouragement..... 60
Document section, Publications Division, work, 1907..... 548-550
Documents, distribution, records..... 550
Dodder injury, investigation..... 57, 330
Dourine eradication, inspections..... 30, 210
Drafting Section, Forest Service, work..... 374
Drain tile use, investigations..... 130, 712
Drainage and irrigation investigations, reorganization..... 126
assistance to farmers by Department..... 129
information, demands..... 129
investigations, 1907..... 127-129, 705-714
general statement..... 705
practical studies..... 130
problems, three classes..... 705
publications, 1907..... 714-715
use as remedy for soil erosion..... 85
work, 1907, review..... 710-714
Dromedary disease, carried by gadfly..... 92
Drought resistance, cotton, studies..... 285
Drought-resistant plants, breeding work..... 272-274
Drug crops growing, industry..... 57, 303-305
garden work, Arlington Experimental Farm..... 296
inspection laboratories..... 384
laboratory, Chemistry Bureau, work, 1907..... 301-303
law, regulations, work, officers..... 71-73, 381, 383-385

Page.
Drug plant investigations 303–305
testing, cooperative work, 1907 303
products, assaying, methods 393
Drugs, samples, examination 73, 392
sent through mails, examination 393
Dry farming, Great Basin, investigations 323
Dry-land agriculture, investigations and cooperative stations 318–319
physical investigations 320
arboriculture studies 280
rice varieties, experiment 683
Ducks, wild, food study 489
protection, need of legislation 98
suggestion for preservation 501
Durum wheat, area, 1907 10
exports, 1907 ..... 10, 53, 313
extension 53, 313
introduction, uses, cost, and value 10
Dust, roads, preventives, investigations, work of Roads Office 732–733

Earthquake phenomena, study, importance 152
Editor, report, 1907 541–627
Editorial work, Publications Division 547–548
Education, agricultural, foreign countries, methods of extension 121, 663
progress, information, publications 656
serial publication, recommendation 659
work of Department 119, 655–658
teaching meteorology in schools and colleges 175
Educational Board, General, New York, support of demonstration farms 340
tours, Soils Bureau 80, 431
Egg production, increase, breeding experiments 239
Eggs, game birds, imported for stocking covers 101
prices, 1899, 1903–1907 20
Egyptian cottons, acclimatization 51, 273
Electro-culture experiments 282
investigations 321
Elk, danger of extermination, need of protection 102
Emmer experiments 313
introduction, experiments 54, 313
Employees, Agriculture Department, changes, etc 741–743
D. C., by States 756
different branches 755–756
Animal Industry Bureau 1906, 1907 191
Plant Industry Bureau, changes 262
Weather Bureau, examination for promotion 177
members, changes, salaries, etc, 1907 182–187
Enarmonia prunivora, injury to apples, investigations 461
Engineer students, instruction, Roads Office 726, 737–738
Engineering, highway, instruction 135
work of Roads Office 726
improvement of National forests, appropriations, work, etc 355
Entomological investigations, increase of appropriations, necessity 482–483
Entomologist, report 443–483
Entomology Bureau, cooperation with Plant Industry Bureau, fruit-disease control 41, 295
growth, 1881–1907 753
miscellaneous investigations 477–478
proposed work 478–481
publications, 1907 573–579
report of Chief 443–483
work of year, classification 443–444
1907, review by Secretary 87–96
Erosion, soil, study 83–86, 440
Estimates, appropriation, tabular statement 514–516
Eucalyptus planting, studies 431
Eupatorium ageratoides, connection with milk-sickness, investigations 306
European countries, crop production per acre, comparison with United States. 663–665

Page.
Eutettix tenella, injury to sugar beets, investigations 465–466
Evaporation recording instruments, improvement 171
studies, demands upon Weather Bureau 25, 156–157
Examinations for promotion, Weather Bureau employees 177
Expenditures, Animal Industry Bureau, 1907 192
Department, discussion 508–509
investigation and its results 508
printing, by various bureaus, etc., 1907 ..... 557, 560
economy 541
Statistics Bureau, 1907 636
Experiment Station, Animal Industry Bureau, work, 1908 233–235
literature, card index 669
Work, bulletins, 1907 668
Stations, insular, work, 1907 ..... 121–123, 670–686
Office, assistance to colleges and schools 657
development of work 649–651
growth, 1889–1907 755
nutrition work, Washington office 689
publications 579–590, 665–670
relations with Experiment Stations 116–118, 651–655
work, 1907, review by Secretary 116–132
report of Director, 1907 649–715
relations of Experiment Stations Office 651–655
Experimental farm, cotton-boll weevil work, Entomology Bureau 444
need of Animal Industry Bureau 198
Explorations, agricultural, 1907 330–331
Export animals, inspection 29, 207
meats and products, inspection certificates 202
Exports, farm products, 1907 21
forest products, value, 1907 22
Exposition, Jamestown, Plant Industry Bureau exhibit 261
Expositions, loans from Forest Service 349
Extensions, forests, necessity, difficulties 65
western agricultural, work, 1907 321–323
Extracts, flavoring, study, Chemistry Bureau 385

Fairbanks Station, Alaska, work, 1907 676
Farm, animals slaughtered, exemption from meat inspection 199
irrigation, Wyoming 709, 710
land acreage, United States 74, 411
management investigations, 1907 60
products, exports and imports, 1907 21–22
wealth production, 1899–1907 19–20
Farmers, boll-weevil region, help by Bureau Plant Industry 58, 339–341
Bulletins, Bureaus, etc., contributing 559
cost of printing 543, 544, 558
number and distribution 106, 543, 558–559, 623–625
cooperative work, Soils Bureau 438–439
Institutes, work, 1907 ..... 120, 660–665
workers, American Association 662
Farms, demonstration, boll-weevil section 339–341
establishment, need, provisions 702–703
irrigation 708, 709, 710
experimental, cotton-boll weevil work, Entomology Bureau 444
in dry regions 703–704
successful methods, studies 60
Fat, butter, prices paid by creameries, different localities 252, 253
Feed, stock, prickly pear, value 61
Feeding cotton-seed products to hogs 240
investigations 239–241
poultry experiments 241
steers for beef, experiments 36, 240
Fees, grazing, receipts, etc 371
Feldspathic rocks, potash extraction, investigation, Roads Office 136
Fence posts, treatment, preservative 70
use in protection of sheep from coyotes 488

Page.
Fertilizer, soil requirements, study 437
tests, Arlington Farm, Soils Bureau 438
Fertilizers, effect on toxic bodies in soil 432–434
use by farmers, value, waste 75, 437
Fertility, soil, relation of bacteria 54, 286
study 75–77, 432–434
Fibers, vegetable, imports, 1907 21
Field mice, control, study 99–100, 500
Fig breeding studies, results 281
culture, Chico, Cal., garden 338
Finches, strawberry, importation, enforcement of law 493
Fires, forest, areas burned, damage, etc 354
protective measures, value 354
Fish for National forests, payment, authorization 346
Flax-fiber industry, investigations 326
Flaxseed, production and value, 1907 17
Flood and River service, Weather Bureau work, 1907 158–160
service, Weather Bureau, extension, recommendation 25, 159
value of warnings by Weather Bureau 160
Flora, forest, of the United States, treatise 349
Florida, citrus fruits, damage by white fly, investigations 466–468
Everglades, drainage survey 131, 711
game protection, history 496
Miami, subtropical laboratory and garden, work, 1907 335–338
oranges, work handling and shipping 291
soil surveys, 1907 415
tobacco work 271
Flour, nutritive value and digestibility 692
Fly, Hessian. *See* Hessian fly.
Fly, white. *See* White fly.
Foliage injury by spraying, prevention 41, 266
Food and drug inspectors, appointment, training 383
regulations, preparation 381
cattle, investigation, Chemistry Bureau 390
imported, inspection 384
samples, analysis 386–387
inspection decisions, work 774
laboratories 384
Washington, D. C., Chemistry Bureau summary 399
investigations by special agents 387
law, regulations, work and officers 71–73, 381, 382, 383–385
nutritive value, investigations 686–700
Food-research work 73, 385, 388, 399
Foods division, Chemistry Bureau, work, 1907 385–388
Foot-and-mouth disease, study 220
Forage crops, investigations 47–49, 323–326, 373, 429
Forecast Service, work, 1907 ..... 24, 150
Forecasts and warnings, distribution 163–165
Foreign countries, agricultural extension 121, 663
productions 114, 639
Forest diseases, cooperative work, Bureau Plant Industry and Forest Service 42, 260
distribution records, work, results 349
extension, necessity, difficulties, etc 65, 359
insect investigations, work 365
management, cooperation with State experiment stations 369
nurseries, damping off diseases, study 268
pathology 267–269
planting, cooperation of Department with private owners 363
national forests, work 360–362
stations, seed beds, stock, etc 360, 362
work 359–362
products, exports and imports, 1907 22
investigations, work of Forest Service 373–380
proposed work of Forest Service 377
special studies 376–377
statistics, transfer of work to Census Bureau 376
study 70

Page.
Forest Service, appropriation 346–347
fiscal affairs 517
growth, 1880–1907 751–752
improvements, 1907, summary 343–345
new provisions in agricultural appropriation act, 1907 346
organization scheme, chart 344
osier willow plantation at Arlington Experimental Farm 295
publications, 1907 590–595
timber sales to be deposited in Treasury 104
work, 1907, review by Secretary 61–71
Forester, report for 1907 343–380
increase of salary 346
Forestry planting, Porto Rico 685
problems, study 64–65
Forests, administration, work of supervisors and rangers 66
cut over, soils, use 426
Europe, management, outlay and returns 62
insects, injurious 95
National, districts and areas 350, 351–353
engineering work, appropriations, etc 355
examinations of lands, proposed work 359
improvement, cost, requirements, etc 63, 67
land claims 346, 358
proposed management, 1908 354
range conditions 64, 68
renewal, broadcast sowing, experiments 362
returns, cost, administration 61
rights of way, permits, etc 358, 368
supervision, officers 354
wolves, extermination problem 486–487
Fowl cholera. *See* Chicken; Pigeon.
tuberculosis study 218–219
Fox farming, remarks 502
France, forests, outlay and returns 62
road-improvement system 138
Freight rates, ocean, study, Statistics Bureau 640
Fruit composition, study, Chemistry Bureau 385
cooking experiments, nutrition investigations 691
district investigations 293, 295
growing, Alaska 675
industry, Porto Rico 685
investigations 55, 287
marketing studies 289
raising, relation of birds 97
shipment investigations, Hawaii Experiment Station 680
storage investigations 291, 294
trees, deciduous, insects injurious, investigations 94, 458–462
transportation, studies 289, 294
varieties, distribution 288
Fruits, citrus, injuries by white fly, investigations 466–468
exports, value, 1907 21
imports, value, 1907 21
nomenclature, identification 288
nutritive value, investigations 123, 690, 695, 697
tropical and oriental, Chico, Cal., garden 338
tropical, diseases, study, Miami subtropical laboratory 336
wild, as grafting stocks, studies 46
Fumigation, hydrocyanic-gas, proposed work 479
remedy for white fly, experiments, results 467
Fungicides, examinations, Chemistry Bureau 390
Fungus, gumming, peach, study 266
Fur-bearing animals, protection, remarks 501–502

Gadfly, Algeria, wasp enemy sent from southern States 92
GALLOWAY, B. T., report as Chief of Bureau of Plant Industry 257–341
on new building operations 777–779
Galls, root and crown, study 283

Page.
Game, Alaska, protection 495
birds, egg importations, remarks 493–494
commissioners and wardens 496
for national forests, payment, authorization 346
importations, index, note 497
information as to laws, etc 496
proposed work 504
publication 102
interstate commerce 498
proposed work 503
regulations, violations 102
laws, index, note 496
United States and Canada, notes 496
violations, prosecution 498
preservation, Alaska 103
protection and introduction, cooperative work, etc 101–103
discussion 492–498
notes 496
proposed work 503–505
refuges, proposed work 504
Garden, school, work, seed distribution 300
Gardens and grounds, experimental work, 1907 ..... 58, 301–303
Gas cysts, intestinal, hogs, study 222
Geese, wild, suggestion for preservation 501
Geographic distribution, birds and animals 490–491
mammals, proposed study 502
Georgia agricultural school farms, assistance of Soils Bureau 438
Gid parasite, sheep, study 34, 231
Gipsy moth. *See* Moth, gipsy.
Glanders diagnosis, agglutination method 215
study and control 214
Glycerine, examination for impurities 392
Goat, Maltese, diseases, study 222
Grain crops, improvement and extension 53–54, 312–315
exports, value, 1907 21
food-value determination 314
growing, Alaska 676
inspecting and grading, need of uniformity 59, 318
investigations 312–316
Chemistry Bureau 390
proposed work 315
irrigation, note 707
moisture-testing apparatus 59, 317
problems, study 54, 312–316
standardization, proposed work 317
work, 1907 ..... 59, 316–318
testing laboratories, establishment 59, 316–318
winter, area, extension 53, 312, 315
Grains, high altitudes, adaptation 315
small, injury by "green bug," investigations 462–465
Grand River, Michigan, flood, 1907, service of Weather Bureau 160
Grape diseases, control, study 267
investigations, 1907 ..... 292–293, 294
soils, California, study 430
Grapes, pollination experiments 293
resistant stocks, study, work at Chico, Cal., garden 293, 294, 338
Rotundifolia, investigations 293, 295
Grass, lawn, seed, distribution 334
Grasses, improvement, experiments 325
introduction into South 325
Gray's moisture test, butter making 246
Grazing, National Forests, animals, number and value, 1907 64
control, permits, etc 370–371
management, proposed work, etc 370–373
permits, receipts, national forests 68, 371–372
trespass, civil and criminal liability, decisions 68

Page.
Great Basin, dry farming with tillage methods 323
Britain, tuberculin test 210
Plains area, dry land agriculture, correlation of work 318
"Green bug," control by use of parasites, investigation 462–464
investigations 93, 462–465
mechanical artificial remedies, experiments, results 464, 465
Greenhouse operations, construction and repairs 301
soils, study, proposed work 440
Greenhouses, Arlington Experimental Farm 297
Grossbeaks, economic relations, notes on work 490
Grounds, Department, general improvements 302
Guar, introduction and experimental planting 326

Hæmonchus contortus, lambs, control method 230
Halsey forest station, work, cost of planting 361
Hawaii Experiment Station, work 122, 671, 673, 677–683
Hawaiian Islands, nutrition investigation 691
Hay, production and value, 1907 15
Headache remedies, analyses methods 393
Hemp investigations, improvement in retting process 327
Manchurian, introduction, testing 333
Hemorrhagic septicemia, chickens and pigeons, study 224
Herbarium, forest, additions, work, etc 349
Hessian fly investigations 92, 462
Hibiscus sabdariffa improvement, study, Miami subtropical laboratory 337
Highway engineering instruction (*see also* Roads) 135, 726
Hillside erosion, cultivation for prevention 85
Hog cholera. *See* Cholera, hog.
Hogs, blood serum, bacteriolytic power 228
diseases, study 222–223
feeding, cotton-seed products 240
tuberculosis infection from cows, study 233
vaccination against cholera 33, 227–228
Honey industry, investigations, Hawaii Experiment Station 680
production in United States, inadequacy of supply 474
Honey-dew honey, description, price 680
Honey-producing plants, investigations 374, 473
Honeys, pollen examination, Chemistry Bureau 397
Hops, American, investigations 304, 305
maturing, note 708
production and value 18, 639
testing for arsenic 392
Home economics, college courses 694, 699
Horse Book, reprint, authorization 255, 545
breeding work 35, 236
disease, maladie du coit, inspections, eradication 30, 210
"palisade worm," study 34, 231
Horses, American carriage, breeding, classification 35, 37, 236–238
imported, inspection, numbers 209–210
scabies, inspection, spraying 206
swamp fever, study, Bureau Animal Industry 33, 212, 214
Horticulture, special investigations 298–301
HOWARD, L. O., report as Entomologist 443–483
Hunting accidents 497
laws, violations 102
licenses, note 496
Hybrid oats breeding 277
plants production 302
Hydrocyanic acid gas, control of pineapple insects 680
fumigation for citrus trees, proposed work 479
Hygienic table, laboratory work, urine tests, etc 397

Ice creams, examination, Chemistry Bureau 389, 399
Idaho irrigation work 707
Illinois, nutrition investigations 691
Illustrations, work, Publications Division 542, 551–553
Imperial Valley, irrigation conditions 706

Page.
Import animals, inspection and quarantine 31, 208–210
Imports, farm products, 1907 21
forest products, value, 1907 22
Index, card, Experiment Stations literature 669
catalogue, medical and veterinary zoology, work, 1908 232
game importations 497
Indexes, card, Publications Division 553
Indexing work, Publications Division 553
Indian Service, cooperation with Plant Industry Bureau, demonstration farm, Arizona 47
Indiana, drainage of Kankakee River, results, recommendations 130–131, 711
soil surveys, 1907 415
Information section, Forest Service, duties, purpose 347–348
Ink, stamping, for meat inspection 27, 193, 227
Inoculation bacteria, nodule-forming, distribution 54, 286
Insect invesgitations, Porto Rico 686
Insecticides, examinations, Chemistry Bureau 390
experimental work 469
Insects, beneficial, importations 90–91
Black Hills National Forest, investigations 457
cotton, other than boll weevil and bollworm, work 449
disease-bearing 96
field-crop, study 92–93, 462
forest, investigations 95, 456–458
fruit tree, deciduous, investigations 94, 458–462, 479
grain, study 93, 479
peach tree, investigations 458–459
pineapple, Hawaii, control experiments 680
relation to health of man and animals, investigations 468–470
scale, investigations 469
tobacco, investigations 94, 470–471, 479
useful, importation and exportation, Entomology Bureau 91, 451–456
vegetable crops, study 95
Inspection, animals, before and after slaughter 200
certificates for export meats and products, 1907 202
division, Animal Industry Bureau, work 198–203
export animals 29, 207
food and drug, Board, personnel 383
work, officers, organization 72, 384
foods, Washington, D. C., Chemistry Bureau, summary 399
imported animals 31, 208–210
meat, establishments, number, 1891–1907 199
laboratories 226
work, 1907 ..... 27–29, 192–195, 198–203
Inspectors, food and drugs, appointment, training 383
Institutes, special-subject, meetings 661
Institutions cooperating in nutrition investigations 689
Instrument division, Weather Bureau, work, 1907 170–172
Insular work, Experiment Stations, 1907 ..... 121–123, 670–686
Interstate commerce, game, work 498, 503
food and drug inspection 384
Iowa, irrigation for humid sections, experiments 708
Iron compounds, soil, effect on vegetation, note 436
corrosion, investigation by Roads Office 136, 734–735
Irrigation and drainage, chief, resignation 126
investigation, reorganization 126, 700
area, value of crops 13
dikes, damage by rodents 502
economy of water, investigations, work 700–702
extension, cooperation with experiment stations and with Department of Interior 128, 703
investigations, 1907 ..... 127–129, 700–704
loss of water, remedies, experiments 127
power, investigations 704
publications, 1907 714–715

Page.
Irrigation relation of drainage 705, 707
Sacramento Valley, adverse influences 706
water, pumping machinery, efficiency 128
supply limited, experiment 709–710
waters, injurious effects, study, Soils Bureau, notes 435, 436
work, review by States 706–710
Ivy, poison, eradication, proposed study 307

Jamestown Exposition, dairy work, Animal Industry Bureau 40, 249
Plant Industry Bureau exhibit 261
Weather Bureau exhibit 170
Jujube, Chinese date, investigations 281
culture, Chico, Cal., garden 338
Joint-worms, investigations 465

Kalmia latifolia, sheep poisoning, investigations 306
Kansas, Neosho River, drainage surveys and plans 132, 712
soil surveys, 1907 415
Kenai Station, Alaska, work, 1907 675
Kentucky, tobacco, work 272
Kharkof wheat growing, results 312
Kite reel, automatic improvement 171
Kites, ascensions, meteorological observations 23, 143–146
Kodiak live-stock station, Alaska, work, 1907 677

Laboratories, butter, Albert Lea, Minn 246
food and drug inspection 384, 387
grain testing 59, 316–318
meat-inspection establishment 27, 226
Laboratory, animal physiological investigations, work 397
contracts, Chemistry Bureau, work, 1907 393
dairy, work, 1907 389
drug, Chemistry Bureau, work, 1907 391–393
food research, Philadelphia, work 399
fruit analysis, Chemistry Bureau, work, 1907 394
meat inspection 226
microchemical, work 396–397
miscellaneous, Chemistry Bureau, work, 1907 389–391
paper and leather, Chemistry Bureau, work, 1907 395–396
physical, Plant Industry Bureau, investigations, 1907 320–321
plant pathology, work, 1907 262–265
seed, work, 1907 328–330
studies, tobacco 272
sugar, Chemistry Bureau, work, 1907 388
vegetable, physiological investigations, work 398
Washington, bacteriological-chemical investigations 398
Lacey Act, enforcement, notes 492, 498, 503
Lambs, raising, "bare-lot" method to prevent worm infestation 230
Lands, examination for new National forests, work 357
exhausted, soil surveys, suggestions for use 82, 418, 427
National forests, settlement, applications, etc 357–358
Larkspur poisoning, investigations 306
Latex coagulation experiments, Hawaii 682
Lathyrus tingitanus, value as a green manure crop 326
Laurel, mountain, sheep poisoning, investigations 306
Law, food and drug, violation, method of prosecution 385
Lacey Act, violations, suits, etc 766–767
office, Forest Service, proposed work for 1908 347
scope of work 345
transfer to office of the Forester 345
work, 1907 345–347
twenty-eight-hour, history 763–766
violations, suits, etc 762–763
Laws, extracts bearing on departmental service 744–745
extracts from United States compiled statutes 1901 743–744
game, complexity and publication 102
index, etc 496

Page.
Leather and paper laboratory, Chemistry Bureau, work, 1907 395–396
examination 395
Lectures, farmers' institutes, illustrative material, demand 661
Legislation affecting forest service 346–347
forest, important 346
Legumes, dried, nutritive value and digestibility 694, 698
Leucocyte counts, milk and cream samples 397
Librarian, report 645–648
Library, growth of force, 1881–1907 754
periodicals 646
publications 595, 646–647
silviculture, prints, lantern, slides, etc., collection and distribution. 365–366
use by scientists, loans, etc 647
Weather Bureau, work, 1907 172
work, 1907, review by secretary 115–116
Licorice roots, introduction 332
Spanish, field, work 304
Life zones and crop zones, studies, Biological Survey 100
remarks 491–492
Lime-sulphur wash, control peach blight 42
remedy for San Jose scale, tests 461
Littlefield report, expenditures of Department, tabular statement 517–518
Live-stock agent, bribe offered, case 773
associations, cooperation with Forest Service 372
breeding work 35–36, 236–238
census, quinquennial, recommendation 642
distribution, Porto Rico Experiment Station 683
farm, sold and slaughtered, value, comparison with cotton 20
grazing, National forests, number and value, 1907 64
shipment, twenty-eight-hour law, violations, suits, etc 762–766
station, Kodiak, Alaska 677
statistics, preparation Statistics Bureau 639
transportation, inspection, violations of law 197
Loco weed disease, experiments, control of weed 305–307
Louisiana demonstration farms 340
drainage survey 712
irrigation work 708
soil surveys, 1907 416
Lumber, statistics, reports from manufacturers, etc 376

Macaroni, use of durum wheat 10, 53
Machinery, cotton improvement 270
rice, experiments, Hawaii Experiment Station 683
Magnetism, study, Mount Weather Observatory 148–149
Mahogany, commercial importance, investigations 349
Mail weighing, postal estimates, etc 107, 549
Maine nutrition investigations 692
Maladie du coit, inspections, eradication 30, 210
Mallein, distribution 34, 228
Malta fever, goats, investigations 222
Maltese goat. *See* Goat.
Mammalogy, economic, work for 1908 500–502
work of Biological Survey 485–490
Mammals, beneficial and injurious, remarks 486
identification 492
importation, supervision, and control 101, 493
study proposed 502
Mange, cattle, eradication, inspections, dippings 30, 206
Mango culture, Porto Rico, use as windbreaks 685
improvement work, Miami subtropical laboratory 337
industry development 44, 332
Mangosteen growing, Canal Zone, experiments 333
Maps, soils, practical uses 78–83, 423–425
weather, issued from stations, 1907 188
Marine charts, daily, value and scope 167
climatology, tabulation, Weather Bureau 168
observers, number of vessels and reports, 1907 166

Page.
Market inspection 199
Marketing apples, methods 55, 289, 294
fruit studies 289, 294
Maryland, nutrition investigations 692
tobacco, work 272
wheat demonstration, work 315
Massachusetts, nutrition investigations 692
Matting material, production 44, 331, 333, 339
rushes, cultivation, Chico garden 338, 339
McCabe, Geo. P., report as Solicitor 759–776
Meal, corn, nutritive value and digestibility, investigations 692, 694
Meat cooking experiments 124, 691, 698
inspection, causes of condemnation 201
establishments, number, 1891–1907 199
exemptions 199
expert commission, personnel 28, 193
laboratories 226
law, operation; regulations, preparation 192–195, 774
State regulations, necessity 29, 194
work, 1907 ..... 27–29, 192–195, 198–203
products, export, inspection certificates 202
preparation, supervision 201
supplies and surplus, statistics 114, 639
Meats, export, inspection certificates 202
preparation, supervision 201
souring and other changes, investigations 227
Melons, wilt-resistant, breeding 52
Melvin, A. D., report as Chief of Bureau of Animal Industry 191–255
Merriam, C. Hart, report as Chief of Biological Survey 485–505
Mesenteric emphysema, hogs, study 222
Metabolism. *See* Nutrition
Meteorological instruments, ship use 171
records, Weather Bureau, work, 1907 173
Meteorologists, foreign, study of American Weather Bureau Service 26, 157
Meteorology, ocean, local offices work, equipment 167
work, 1907 166–168
teaching in schools and colleges 175
Mexican cotton boll weevil. *See* Boll weevil, cotton.
Miami subtropical laboratory and garden, work 335–338
Mice, field, control, study 99–100, 500
Michigan soil surveys, 1907 416
Micro-chemical laboratory, work 396–397
Microscopes, high-power, improvement 283
Microscopic inspection, pork, discontinuance 203
Milk and cream contests 249
secretion, study 40, 247
sickness, investigation 306
supply, improvement 38, 195, 248
investigations, District of Columbia 32, 39, 217, 218, 248
tuberculous cattle, use 217
Milks, analysis, Chemistry Bureau 389, 399
Mine props, treatment, preservative 70
tailings, effect on soils, study, Soils Bureau 435, 436
Minerals, soil, solubility, study 436
Mink farming, remarks 502
Minnesota, Albert Lea laboratories, butter and cheese investigations 38, 246
nutrition investigations 692
tile-drainage investigation 712
Minnows, top, mosquito control, investigations, Hawaii 680
Mississippi, Delta region, drainage investigations 132
demonstration farms 340
drainage survey 712
River soil waste, estimates 440
soil surveys, 1907 416
Missouri, nutrition investigations 693
soil surveys, 1907 417
Modesto irrigation district, remarks 707

Page.
Moisture content, atmosphere, measurement apparatus 172
grain, testing apparatus, development 59, 317
soil, constituents, determination by centrifugal machine 320
solutions, plant nutrients, distribution 76, 435–436
Molasses, production and value, 1907 17
Moneys, public, from sales, deposit and use 511–512
Monodontus trigoncephalus, lambs, control method 230
Montana, sheep losses from gid 231
MOORE, WILLIS L., report as Chief of Weather Bureau 143–189
Morgan, horse-breeding work, 1907 236
Morphine extraction from poppies, experimental work 303, 304
Mosquitoes, Canal Zone, investigations 468
control by top minnows, investigations, Hawaii 680
Moth, brown-tail, control measures 89, 449, 452
laboratory at North Saugus, Mass., work 452
parasites 90
codling, investigations 459–460
gipsy, parasites 90
proposed work 480–481
work of Entomology Bureau 89, 449–451
Moths, gipsy and brown-tail, appropriations for destruction 451
Mount Weather buildings, construction, cost 180–181
Observatory. *See* Observatory.
Mulberry plantation, Bureau of Entomology at Arlington Experimental Farm 295
stock, distribution 476
Mules and asses, imported, inspection, number 209–210
Mycotic stomatitis, study 220

National Forests. *See* Forests, National.
Nebraska drainage survey, tile-drainage experiments 712
irrigation work 708
soil surveys, 1907 417
Necrotic dermatitis, sheep, study 222
Negri bodies, diagnosis of rabies 219
Nelson amendment, extension of agricultural courses 649
Nematode diseases, studies at Miami subtropical laboratory 335
Nematode-proof tobacco, breeding 51, 272
Nevada, Fallon Experiment Farm, crop work, 1907 323
irrigation work 708
New England, swamp lands, study 712
Hampshire soil surveys, 1907 417
Jersey swamp lands, study 712
Mexico, biological survey, work 492
York, nutrition investigations 693
soil surveys, 1907 417
Newcastle Irrigation Extension Farm, dry farming, etc 710
Nicotine content tobacco, studies 272
Nodule forming bacteria, distribution 54, 286
Normals, new system, Weather Bureau 173
North Carolina, drainage survey 713
soil surveys, 1907 418
Dakota, Red River of North, drainage surveys 131, 713
soil surveys, 1907 418
Nurseries, forest, plantations 359–362
Nursery work, Arlington Experimental Farm 298
Nutrition, animal, experiments with respiration calorimeter 36, 240
investigations, cooperation, Office Experiment Stations with other Experiment Stations Office 123–126, 686–700
institutions 123–125, 689–694
proposed work 700
results, distribution to public 125–126, 697
Nuts, nutritive value, investigations 123, 690, 696, 697

Oak woods, studies, work 349
Oats breeding, improvement 276

Page.
Oats production and value, 1907 16
winter, establishment, experiments 312
Observatories in course of construction 181
Observatory buildings, value in Weather Bureau, work 181
Weather Bureau, owned or rented by Department ... 178–180
Mount Weather, administration building, destruction 24, 149
meteorological work 23–24, 143–150
Observers, Weather, new, instruction 188–189
Ocean freight rates, study, Statistics Bureau 640
meteorology, local offices, work, equipment 167
work, 1907 166–168
Œsophagostomum columbianum, lambs, control method 230
Ohio River flood, 1907, service of Weather Bureau 160
soil surveys, 1907 419
Oil cake and meal, exports, value, 1907 21
wood, tree introduction 332
Oils, coal and petroleum, distillates, studies 379
creosote, studies 374
vegetable, exports and imports, value, 1907 21
Olive culture, Arizona, California, and Texas 281
Olives, drought-resistant, introduction 46, 281
OLMSTEAD, VICTOR H., absence, taking Cuban census 629
Onions, Bermuda, investigations, seed production 300
successful culture, Texas, note 421
Oranges, handling and shipping, improvement 55, 289
Orchard cultivation experiments, Arlington Experimental Farm 296
experimental, Arlington Experimental Farm 288
irrigation, experiments 707
Orchards, deciduous, Hawaii Experiment Station 681
tropical, Hawaii Experiment Station 681
Orders and regulations, Secretary, duty of Solicitor 773–774
Oregon, irrigation experiments 708
Oriental plant explorations and introductions 43, 331
Ornithology, economic, work for 1908 500–502
of Biological Survey 485–490
Osier willow plantation, Forest Service at Arlington Experimental Farm 295
Oxidation, soil, necessary to destruction of toxic bodies 434
Ozark regions, apple diseases, control 41, 266, 295

Packing-house products, imports, value, 1907 221
PAGE, LOGAN WALLER, report as Director of Office of Public Roads 717–740
"Palisade worm," horse disease, study 34, 231
Panama straw palms, planting in Porto Rico 685
Paper and leather laboratory, Chemistry Bureau, work, 1907 395–396
photographic developing, examination 396
pulp, sources, investigations 70
Papers, investigations 395
Paprika peppers, experiments 304
Paraffined-pot method, study of manurial requirements of soils 437
Parasites, animal, and parasitic diseases, work, Bureau Animal Industry .. 34, 230–232
collection, catalogue entries 232
cotton boll weevil, control 87
enemies to gipsy and brown-tail moths, importations, work of Entomology Bureau, etc 90, 451–455
Paspalum dilitatum, introduction and value in southern States 325
Pastures, sheep, infestation with worms, study and experiments 230
Patents, applications by Department employees 775
Pathological division, Animal Industry Bureau, work, 1907 212–226
Pea, Tangier, value as green manure crop 326
Peach blight, California, control 42, 266
borer investigations 460
diseases, study 265–266
spraying, sulphur wash, prevention of foliage injury 41
wild, experiments for production of drought-resistant fruit 46
Peanuts, experiments, 1907 300
Pear blight, eradication, study 41, 265

Page.
Pecan studies, plans 295
Pedigree Record Associations, supervision 241
Pelican Island, bird reservation, remarks 494
Pennsylvania nutrition investigations 694
soil surveys, 1907 419
wheat demonstration work 315
Peppers, cayenne, experimental work 304
paprika, experiments 304
Perfumery plant production, proposed work 305
Periodicals, library 646
Peruvian alfalfa, life history, study 45, 280
Pheasants, importations, notes 493
Phenological investigations, cooperative work 294
Philadelphia food research laboratory, work 399
Photographic prints and lantern slides, sale, proceeds 552
work, Publication Division 551–553
Photomicrographs, study, Chemistry Bureau 397
Photography, Forest Service, demands, facilities, etc 357
Physical laboratory work, Soils Bureau 434
Pigeon cholera, study 224
tuberculosis, study 219
Pilot charts, Navy Department, information furnished by Weather Bureau 168
PINCHOT, GIFFORD, report as Forester 343–380
Pine lands, cut over, agricultural uses 426
Pineapple industry, Porto Rico 685
insects, pest, Hawaii, control experiments 680
rot, control, Hawaii experiments 681
Pistache nut, cultivation, distribution 281, 337, 338
culture, extension 281
Pistacia spp. *See* Pistache.
Pittsburg Exposition, Weather Bureau exhibit, 1907 170
Plant analysis laboratory, Chemistry Bureau, work, 1907 394
breeding, Alaska 675
work 269–278
diseases, study, summary 265
food ingredients, sources in soil formation 76, 435–436
Industry Bureau, appropriation, 1907 257
business operation, 1907 257
cooperation with Indian Service, demonstration farm, Arizona 47
cooperation with other Bureaus in Department 260, 323
exhibit at Jamestown Exposition 261
growth, 1881–1907 751
organization and policy, 1907 259
publications, 1907 ..... 258, 595–601
reference book 259
relations with Agricultural Experiment Stations 261
report of chief, 1907 257–341
work, 1907, review by Secretary 40–61
oriental explorations and introductions 43, 331
Plants adapted to alkali soils 273
disease-resistant, breeding 52, 277
honey-producing, investigations 473, 474
hybridization work 302
importations, inspection by Department of Agriculture 471–472
life-history, studies 44–47, 278–283
Platte Valley, irrigation, note 708
Poison, corn cockle for chickens 223, 307
Poisonous plants, studies 57, 305–307
substances in soil, harmful to plant growth, nature, control 76, 432–434
Poles, treatment, preservative 70
Pollination grapes, experiments 293
Polygnotus, enemy to Hessian fly, investigations 462
Polyporus igniarius, life history study 268
Pomological collections, studies 288
Pomology, investigations 287–295
publications, 1907 601

Page.
Ponies, breeding Alaska, recommendation 677
Poppy, experimental work 303
Pork exports to countries requiring microscopic inspection 203
raw, danger of trichinosis 195
Porto Rico Experiment Station, work 122, 672, 683–686
Posts, fence. *See* Fence posts.
Potato, sweet. *See* Sweet potato.
Potatoes, alcohol, introduction from Russia 332
growing, Alaska 675
Irish, testing varieties 299
production and value, 1907 16
wilt-resistant, breeding 264
Potash extraction from feldspathic rocks, investigation, Roads Office 136
Poultry and eggs, value, 1907 20
breeding and feeding, investigations 36, 239, 241
digestion experiments 229
dressed, prices 1899, 1903–1907 20
products, value, comparison with wheat and hay 20
size of flocks, and floor allotment to each fowl, study 239
Preserves, game 497
Prickly pear, stock feed value 61
Printing, appropriation and expenditures 541
costs, estimates, reports to Congress 545
estimates 542
expenditures by various Bureaus, etc 557, 560
Office, branch, work, 1907 ..... 554, 560, 561
requisitions, authority of Editor 545
requisitions, Publications Division, 1907, increase over 1906 ..... 542, 560, 561
Weather Bureau, 1907 176
Project filing, method, advantages, etc 104
Prussia, forests, outlay and returns 62
Publication, serial, agricultural education, recommendation 659
statistics 556–561
Publications, Animal Industry Bureau, 1907 ..... 255, 565–570
annual, reduction 546
specially authorized, remarks 105, 546, 548
Biological Survey 570–571
by classes 1904–1907 556
Chemistry Bureau, 1907 ..... 400–401, 571–573
Congressional 562–564
Division, growth, 1881–1907 754
publications, 1907 602
recommendations 555
report of Chief, 1907 541–627
work of year, summary 542–555
work, 1907, review by Secretary 105–107
Entomology Bureau 573–579
Experiment Stations Office 579–590, 665–670
Forest Service 380, 590–595
general, preparation and revision 548
Irrigation and Drainage, 1907 714–715
issued 1907, list, details, number of copies 562–608
number, 1898–1907 557
copies and pages by Bureaus, Divisions and Offices, 1907 557
nutrition work 694–697
Plant Industry Bureau, 1907 ..... 258, 595–601
received and distributed by Division of Publications, 1907 609–625
by Weather Bureau, 1907 625–627
reprinting by Experiment Stations, suggestion 107
Roads Office 603–606, 736
sale by Superintendent of Documents, number, value 105, 544
Secretary's Office 564
Soils Bureau 606–607
Statistics Bureau 605–640
Weather Bureau 607–608
weight of mail forwarded by Division 107–549

Pulp, paper. *See* Paper. Page.
Pure-food law, work 774

Quail disease, study 33, 221, 496
Quarantine division, Animal Industry Bureau, work, 1907 206–212
imported animals 31, 208–210
laws and regulations, relation to forest grazing 372
provisions, animal diseases 30, 206–210, 771–772

Rabbit pest, control 99
Rabbits, damage to forest stock, San Gabriel forest 360
destruction by bacterial diseases 487
Rabies investigations, Bureau Animal Industry 33, 219–220, 234
Rain gauge, improvement 171
Rampart station, Alaska, work, 1907 676
Range, National Forests, conditions 64, 67–68
Ranges, experimental plantings 362
National Forests, reseeding, studies 373
Rats, house, control experiments, etc 99, 487, 500
wood, damage to forest stock, San Gabriel forest 360
Reclamation Service, cooperation with Soils Bureau 425
Recommendations by Secretary 25, 65, 67, 107, 119, 120, 123, 126, 138, 505
Red gum diseases, study 268
Refrigeration, fruit for shipment 291
Renovated butter inspection 40, 255
shipment in violation of law, case 769–770
Rental, buildings, District of Columbia, 1907 105
Reservoirs, evaporation, problems 26, 156–157
Respiration calorimeter. *See* Calorimeter.
Rice blast, control, study 263
coating artificial, detection, study 385
dry-land varieties, experiments 683
experiments, Porto Rico 284
exports and imports, 1904–1907 18
investigations, Hawaii Experiment Station 682
selection of large-grained varieties 314
irrigation, note 180
lands, crop adaptation, experiments 299
soy beans for rotation 49
machinery experiments, Hawaii Experiment Station 683
new varieties, introduction 44, 331, 332
production and value, 1907 18
region stations, Weather Bureau, 1907 161
River and Flood Service, Weather Bureau, work, 1907 158–160
service, Weather Bureau, extension, recommendation 25, 159
Road building, dissemination of information, proposed work 734
expert advice, aid of Department 134
construction and maintenance methods 133, 719–726
improvement lectures, etc 135, 728–730
materials, tests; classification 726, 732
investigations in several States 137
properties, investigations by Department 135
preservatives, investigations 138
Roads, county systems, aid of Department 137, 734
dust preventives, investigations 138, 732
methods of construction, location, cost, etc., work of Roads Office 720, 722
gravel, methods of construction, location, cost, etc., work of Roads Office 723–725
earth, improvement, importance 731
highway engineering instruction 726
macadam, methods of construction, location, work of Roads Office 719–726
mileage revenues and expenditures, 1904 ..... 133, 731
object-lesson, construction, cost, etc 133–134, 719–726
Office, cooperation with Forest Service, etc 136, 726–727
expenditures by projects, 1907 736–737
growth, 1893–1907 755
proposed work 737–740
publications, 1907 603–605

Page.
Roads, Office, report of Director 717–740
work, review by Secretary 132–138
rural-delivery, inspection by Roads Office 731–732
sand-clay, methods of construction, location, cost, etc., work of Roads Office 721–722
work under way 725–726
Rock, decomposition under action of water, investigations by Roads Office .. 735
Rodents, control investigations 99
injury to dikes 502
Root-galls, study 263
Root-worm, grape, proposed work 479
Roselle improvement, study, Miami subtropical laboratory 337
Rot, brown, peach and plum, investigations 267
cocoanut bud, study, control 263
pineapple, control Hawaii experiments 681
Rotundifolia grapes, investigations 293, 295
Roundworms, sheep, study 34, 230
Rubber industry, Hawaii, investigations 681
plantations, studies 285
tapping systems, experiments, Hawaii 681
trees, varieties, yield 286
Rust, grain, investigations 314
Rust-resistant asparagus, breeding 52, 277
Rye, production and value, 1907 17

Sacramento Valley, irrigation, adverse influences 706
Sago, starch determination, study 397
Salaries, Weather Bureau, 1907 182–188
Salton Sea, evaporation studies by Weather Bureau 25, 152–157
report of Board 153–155
history, importance of evaporation studies; availability 155, 156
Samar matting sedge, introduction 333
Samples, drugs, examination 73, 392
San Gabriel forest, destruction of forest stock planted 360
Jose scale investigations 461
Marcos forest station, work 360
Santa Barbara forest, planting, cost, work, etc 360
Sap-rot forest trees, study 268
Saxony, forests, outlay and returns 62
Scab, sheep, inspection, dippings 30, 205–206
Scabies, cattle. *See* Mange.
eradication retarded by removal of fences 197
horses, inspections, sprayings 206
sheep. *See* Scab, sheep.
Scale-eating birds, investigations 97, 490
School, agricultural, farms, assistance of Soils Bureau 438
garden work, seed distribution 300
Schools, agriculture teaching, growth of movement 119, 656
movable, foreign countries 663
supplementary to Farmers' Institutes 662
Scientists, Agriculture Department, number in several branches of Department 756
Score cards, system for creameries 251
Secretary, Agriculture. *See* Agriculture.
Office, publications, 1907 564
Seed adulteration, decrease 57, 329
alfalfa, production, encouragement 47, 324
bed, tobacco, sterilizing to prevent root rot disease 265, 271
beet, American, production and testing 56, 309
high grade pedigree strains, establishment 308
single germ, development 309
testing 309
Bermuda onion, investigations 300
Congressional distribution 58, 334
corn preservation methods 276
selection, results 274
cotton, separation, grading 50, 289

Page.
Seed foreign, introduction 330–333
laboratory work, 1907 328–330
selection, cotton breeding 270
studies, progress 57, 330
testing work, 1907 328
vitality experiments 329
Seepage, irrigation, notes 706, 707
Seismological work, Weather Bureau 25, 151–152
Seismology, National Bureau, Strasburg, Germany, formation 25, 152
Serum blood, hog, bacteriolytic power 228
Sewage disinfection, use of copper sulphate and chlorin 287
Shaftal, clover, introduction, experiments 279
Sheep, bighead, study 306
breeding, Alaska, recommendation 677
for wool and mutton 35, 238
dips, official use 34, 229
imported, inspection, numbers 209–210
necrotic dermatitis, study 222
parasites, study 34, 230–231
pastures, infestation with worms, study and experiments 230
poisoning by mountain laurel 306
protection from coyotes by fence 486
scab, dippings, inspection 30, 205–206
treatment, dips 232
Shipping fruit tests 290
services of telegraph division of Weather Bureau 176
Shore birds, North American, distribution 492
protection, need of legislation 98
Shorthorns, milking, breeding work 35, 238
Shot-hole disease, peach, study 266
Silk culture, work, 1907 ..... 95, 475–477
imports, value, 1907 22
reeled, sale by Department 476–477
Silkworm eggs, purchases and distribution 475–476
Siloing seed beets 310
Silos, erection, southern States, average cost 243
Silvics, data, compilation, library, etc 365–366
field studies 364
work of Forest Service 364–366
Silviculture, proposed work 363–364, 366
work, management, etc 68–69, 359–370
Sirup, production and value, 1907 17
Sisal plants, importation, Porto Rico 684
Sitka station, Alaska, work, 1907 675
Smelters, tailings, effect on lands and crops adjoining 391
Smut, grain, investigations 314
Smut-resistant oats, breeding 277
Snakeroot, connection with milk sickness, investigations 306
Snow and Ice Bulletin, scope, size of edition, 1907 163
Soil bacteriology, work 54, 286
erosion, study 83–86, 440
fertility problem, study 75–77, 432–434
improvement studies, Arlington Experimental Farm 296
indicator, native growth 274
minerals, solubility, study 436
moisture constituents, determination by centrifugal machine 320
solutions, plant nutrients, distribution 76, 435–436
survey work, area surveyed and mapped, 1907, cost per square mile .. 75, 411–413
surveys, demands from various classes 424
utilization problems, study by Soils Bureau 425–432
wash, annual waste, estimates, study 441
Soil-test farm, proposed work 439
Soils, advance sheets, Field Operations 562–563
Bureau, cooperative work 425, 434, 438–439
educational tours 80, 431
growth, 1895–1907 752
publications, 1907 606

Page.
Soils, Bureau, report of Chief, 1907 411–441
work, 1907, review by Secretary 74–86
corn, study 429
cotton, study 428
fertilizer requirements, study 437
formation, plant food ingredients, sources 76, 435–436
grape, California, study 430
infertility, causes 432–434
manurial requirements, study, Soils Bureau 437
maps and reports, practical uses 78–83, 423–425
reports, practical uses 78–83, 423–425
tobacco, study 77–78
toxic substances, nature, origin, control 76, 432–434
Soy beans, new variety, introduction 326
rotation on rice lands 49
Solar physics study, Mount Weather Observatory 146–148
radiation observations, Mount Weather 146–148
Solenopsis germinata, enemy to cotton-boll weevil 448
Solicitor, correspondence with Department of Justice 762–763, 773
duties 759
Office, work, 1907, review by Secretary 139
report 759–776
Sorghum, classification, study 313
culture, extension 48, 313
South Carolina, drainage survey 713
soil surveys, 1907 419
tea culture investigations 307
Dakota, irrigation work 709
soil surveys, 1907 420
Texas garden, Brownsville, Tex., establishment 339
Southern States dairying 242–243
Sparrow, English, investigations 500
"Special use" applications, National forests, disposition of cases 346
Spices, samples, examination for Maine Experiment Station 397
Spraying demonstrations, apple diseases 266
for codling moth, work of Entomology Bureau in cooperation with Plant Industry Bureau 459–460
foliage injury, prevention 41, 266
tropical fruits, Bordeaux mixture 336
Squirrel, ground, study 500
Squirrels, ground, destruction by bacterial diseases 487, 488
Stamp, meat inspection 27, 193, 227
Standardization, grain, work, 1907 ..... 59, 316–318
Starch, raw and cooked, digestibility study 693
Stations, weather, new, recommendations 177
Statistical agents, State 113, 636, 642
work, appropriations, 1863-1907 631
Statistics Bureau, growth, 1881–1907 753
publications, 1907 ..... 605, 640
recommendations 641
report of Acting Chief 629–644
work, 1907, review by Secretary 108–115
crop, growth and development 108–109, 629–631
international trade and production 114, 638
Steer feeding experiments 36, 240
Stenographers and typewriters, Forest Service, work, number, etc 357
Stock dips, experiments 229
farms, cropping systems 60
feed, prickly pear, value 61
See also Live stock.
Stomatitis, mycotic, study 220
Storage, cold. *See* Cold storage.
fruit, investigations 290–292, 294
Strongyloides longus, sheep, infestation method 231
Stump Lake, bird reservation, remarks 495
Sugar and molasses imports, value, 1907 .....
beet, factories, land values .....

Page.
Sugar, beet, factory, by-products 312
investigations 56, 308–312
production, 1879–1907, increase and value 11, 56
See also Beet, sugar.
beets, irrigation experiments 707
See also Beets, sugar.
cane experiments, Porto Rico 684
laboratory, Chemistry Bureau, work, 1907 388
production and value, 1907 17
table prepared by Statistics Bureau 639
region stations, Weather Bureau, 1907 161
Sulphur dioxid, injuries to vegetation, study 391
in food, effects, study 73, 386, 398
testing for arsenic 393
Sulphur-lime wash, peach spray experiments 41
Sumacs, tannin content, investigation 395–396
Sun spots, relation to magnetism, investigation 149
Supervisors, forest, duties 350
meetings 351
Supplies, annual, report 511
contract, examination Chemistry Bureau 74, 393
Forest Service, management 356
Surgery appliances, sterilization, study 399
Surra, inspection of animals imported 208
study, Bureau Animal Industry 33, 211, 213
Swallows, usefulness and increase, notes 489
Swamp fever, horses, causes, symptoms, treatment 211, 212–213
study, Bureau Animal Industry 33, 211, 212
land acreage, United States, value when reclaimed 74, 80
lands, study 78, 429
tide lands, reclamation 132, 712
Sweet corn for canning and table use, improvement 275
potato, alcohol, study 394
potatoes, investigations 299
Swine, imported, inspection, numbers 209–210
Swiss cheese, investigations 247
Tabanids, enemies, exportations to France 456
Tabulation, crop reports, improved methods 637
Tagging cattle tested for tuberculosis 217
Tanning material, investigations 395
Tapioca starch determination, study 397
Tea culture investigations, and plans 307–308
Teachers, card directory 657
Telegony, study 239
Telegraph division, Weather Bureau, services to shipping 176
Telegraphy, wireless, Weather Service 169
Telephone companies, cooperation with Weather Bureau, forecasts 164
Tennessee, nutrition investigations 694
soil surveys, 1907 420
Tequila varieties, investigations 327
Texas, Amarillo Experimental Farm cereal work 314
Brownsville, south Texas garden establishment 339
cattle tick. *See* Tick, cattle.
date garden, establishment 45, 278
demonstration farms 340
fever control 203
irrigation experiments 709
San Antonio Experiment Farm, work, 1907 321–322
soil surveys, 1907 421
tea culture investigations 308
"The Forest Atlas" Section, establishment, purpose, etc 369–370
Thielavia basicola, cause of tobacco root-rot, study 265, 271, 321
Thielaviopsis ethaceticus control experiments, Hawaii 681
Tick, cattle, eradication, work of Animal Industry Bureau 29, 196, 204
investigations 468–469
Texas, study 96

Page.
Tile drainage investigations 130, 712
Timber land, soils, use after clearing 81, 426
mine, preservation, work of Forest Service 379
preservation, study 70
sales, Indian lands, investigations 369
National forests, amount, management 366–368
cooperation with State experiment stations 369
receipts, 1907 69
scarcity, increase 65
standing, census, need 65
strength tests 70
tests, work of Forest Service, results 375–376
use against soil erosion 86
vehicle, tests 375
wolves, depredations and control 486–487
Timbers, structural, preservation, experiments 379
Timothies, improvement 48, 325
Tin determinations, food 386
TITUS, E. S. G., brown-tail moth investigations, note 452
Tobacco crop, handling, improvement 52, 271
curing, study 271
experiments, Hawaii Experiment Station 678
Porto Rico 684
imports, value, 1907 21
insects, investigations 94, 470–471
nematode proof, breeding 51, 272
production and value, 1907 17
root-rot control, study of soil conditions 265, 271, 321
seed distribution 334
shade grown 51, 271
soils, Florida, note 415
study, Soils Bureau 77–78
testing, nicotine content, studies 272
type variations, study 77–78
unmanufactured, exports, value, 1907 21
Tobaccos, improved, breeding 51, 270
Tomato diseases, study, Miami subtropical laboratory 336
Toxoptera graminum. *See* "green bug."
Trade balance, farmer's interest 22
Board, National, reference to Statistics Bureau 643
foreign, 1907 21–22
international, and production, statistics 114, 638
wastes, examination, Chemistry Bureau 391
Transportation, fruit, investigation 289–291, 294
Tree planting, National forests 360–362
Trees, geographic distribution 491
Trespass, cases referred to law office, Forest Service, settlement, etc 345, 346
Trespasses, grazing, damage, cases, etc 372
Trichinæ inspection, discontinuance 28, 194
Trichinosis, danger from eating raw pork 195
Trifolium pratense foliosum, experiments, seed production 279
suaveolens, introduction, experiments 279
Tropical fruits culture, collection, Chico, Cal., garden 338
diseases, study, Miami subtropical laboratory 336
products, annual consumption, United States 670
Truck crops, insect enemies, investigations 466
production, shipping and sale, study 298
TRUE, A. C., report of Director of Office of Experiment Stations 649–715
Trypanosoma evansi. *See* Surra.
Tubercle bacilli, butter 216, 233
human, bovine, and avian, studies 32, 216
type, transformability, study 216
virulence, mode of transmission 216, 233
Tuberculin, distribution 34, 228
test, Great Britain 210
tests, dairy cattle 32, 216–218, 235
Tuberculosis investigations, Bureau Animal Industry 31–32, 215–219, 233

Page.
Tumors, plant roots or stems, study 263
Tung-shu, wood-oil tree, introduction 332
Tupelo gum diseases, study 268
Turkeys, blackhead disease, study 235
wild, note 497
Turlock irrigation district, remarks 707
Turpentine investigation, chemical studies, cooperation with University of North Carolina 349
results 348–349
waste pine products 70
Turpentines, wood, investigation 396

Udo, Japanese, introduction 333
Underdrainage problem, notes 705
Urticaria, hogs, study 223
"Use Book" revision, improvement 350
Utah, drainage survey 713
irrigation experiments 709

Vaccination, hog cholera, experiments 33, 227–228
Vaccine, blackleg, distribution, results 34, 225–226
Vanilla experiments, Miami subtropical laboratory 337
Vegetable crops, insects injurious, investigations 95, 465–466
physiological investigations, laboratory, work 398
physiology and pathology publications, 1907 601
Vegetables, garden, testing, work, 1907 333
growing, Alaska 675
Venereal disease, horses, eradication 30, 210
Vermont, horse-breeding, work, 1907 236
Vessels, cattle, inspection 207
wireless telegraphic, Weather Service, list 169
Vetch, early maturing, discovery 49, 326
hairy, cover crop for tobacco 271
Vetches, experiments, early maturing species 326
Vicia dasycarpa, early maturing vetch, tests 326
Vinegar, caramel, fuller's earth test 385
Vineyards, cooperative, viticultural investigations 292
Virginia demonstration farms 340
drainage survey 713
soil survey, 1907 422
Viticultural investigations 292–293, 294

Wardens, game 496
Washington, drainage survey 713
irrigation work 709
laboratory, bacteriological-chemical investigations 398
soil survey, 1907 423
Wastes, trade, examination, Chemistry Bureau 391
Water contamination studies 55, 287
economy in irrigation, investigations, work 700–702
examination, Chemistry Bureau 390, 398
farm, supplies, improvement 55
soil, preservation, study 84
supply, dairy farms, examination 229
system installation, Hawaii Experiment Station 677
Watermelon, wilt-resistant, breeding 264
Weather Bulletin, National, description, size of editions 162
Bureau, Chief, report, 1907 143–189
correspondents, by States 163
employees, examinations for promotion 177
number, changes, salaries, etc., 1907 182–188
library, work, 1907 172
printing, 1907 176
publications, 1907 607–608
Service, study by foreign meteorologists 26, 157
work, 1907, review by Secretary 23–26
forecasts and warnings, service, 1907 150–151

Page.
Weather forecasts, importance of upper-air studies..... 24, 144
maps issued from stations, 1907..... 188
observers, new, instruction..... 188-189
reports, wireless, 1907..... 169
Review, Monthly, contributions, new features, 1907..... 174-175
stations, new, recommendations..... 177
Weevil, cotton boll. *See* Boll weevil.
Weevil-resistant cottons, breeding..... 50, 284
West Virginia soil surveys, 1907..... 423
Western agricultural extension work, 1907..... 321-322
Wet-land crops, introduction..... 332
Wheat demonstration work, Maryland and Pennsylvania..... 315
deterioration, causes, investigations..... 315
improvement, Pacific coast..... 313
Kharkof, growing, results..... 312
production and value, 1907..... 16
region stations, Weather Bureau, 1907..... 161
Wheat-grasses, successful growing in the West..... 325
Wheats, investigations, Chemistry Bureau..... 398
White fly investigations..... 93, 466, 481
WHITNEY, MILTON, report as Chief of Bureau of Soils..... 411-441
Wichita National Forest, herd of buffalo..... 71
WILEY, H. W., report as Chief of Bureau of Chemistry..... 381-409
Willamette Valley, irrigation experiments..... 708
Willow, basket, yield of holts, etc..... 349
WILSON, JAMES, report as Secretary of Agriculture..... 9-140
Wilt-resistant cotton, breeding..... 264
watermelons and cowpeas, breeding..... 264
Wind River Valley, irrigation..... 710
vane recording, improvement in construction..... 170
Wind-breaks for citrus orchards, Porto Rico..... 685
Winter grain area, extension..... 53, 312, 315
irrigation, experiments..... 707
Wireless telegraphy, Weather Service..... 169
Wisconsin Experiment Station, cooperation in cheese investigations..... 38, 246
soil surveys, 1907..... 423
Wolves, extermination in National Forests, etc., problem..... 486-487
methods..... 100
fence, proposed experiments..... 500
Women, aged, dietary study..... 694
Wood chemistry, proposed work of section..... 377
work of Forest Service..... 373-374
distillation, destructive, study..... 396
studies..... 70
Forest Service..... 374
preservation, investigations, work and proposed work of Forest Service. 377-380
pulp, laboratory at Boston, woods used, etc..... 374
stain, study..... 268
uses, proposed work of section..... 377
utilization office, purpose, work..... 372-373
Woodland management, assistance to private owners, Forest Service..... 69
Woodruff, George W., work as Chief of Law Office, Forest Service..... 345-346
Woods, preservation of different species, work of Forest Service..... 378-379
Wool imports, value, 1907..... 22
Worms, sheep and lambs, control methods..... 230
Wyoming, irrigation experiment..... 709-710

Yeasts, pure cultures, for ciders, etc., Chemistry Bureau..... 388
Yellow diseases, fruit trees..... 266

Zapupe, investigations..... 327
Zinc determinations in food..... 386
Zones, crop and life, remarks..... 491-492
Zoology division, Animal Industry Bureau, work, 1907..... 230-232
medical and veterinary, index-catalogue, work, 1908.....

O

UNIV. OF MICH.
APR 2 1910

UNIVERSITY OF MICHIGAN
3 9015 06224 8763

The work of the Bureau of Animal Industry is greatly increased by the act of Congress of June 30, 1906, requiring the supervision of all slaughtering establishments engaged in the preparation of meat and meat-food products for shipment in interstate commerce. The appropriation for this work was increased to $3,000,000, whereas the amount expended by the Bureau under the previous law was about $750,000. In addition the Bureau was instructed by Congress to take up the work of eradicating cattle ticks from the Southern States. These ticks are the agencies by which the infectious disease of cattle known as "Texas fever" is distributed, and are a great detriment to the raising of cattle in the Southern States. The work of the Bureau is also increased by additional appropriations for the purpose of eradicating scabies in cattle and sheep, and this work was taken up in nearly every State and Territory west of the Mississippi River.

BUREAU OF PLANT INDUSTRY.

The Bureau of Plant Industry was established by Congress by the act making appropriations for the Department of Agriculture for the fiscal year ending June 30, 1902, approved March 2, 1901. It was a consolidation of the former divisions of Botany, Pomology, Vegetable Physiology and Pathology, Agrostology, Experimental Gardens and Grounds, and Seeds.

Growth of total force employed from July 1, 1881, to July 1, 1907.

Date.	Number employed.	Date.	Number employed.
July 1, 1881	41	July 1, 1895	132
July 1, 1883	56	July 1, 1897	127
July 1, 1885	28	July 1, 1899	159
July 1, 1887	33	July 1, 1901	203
July 1, 1889	83	July 1, 1903	325
July 1, 1891	105	July 1, 1905	509
July 1, 1893	131	July 1, 1907	[a] 763

[a] The number of temporary emergency employees in the Bureau of Plant Industry employed in the cotton boll weevil infested districts, outside of Washington, D. C., on July 1, 1907, was 44, making the total number employed therein on July 1, 1907, 807.

The increase in the force of the Bureau of Plant Industry is due to the increase in the demands on the Bureau of Plant Industry for work of all kinds from different parts of the country.

FOREST SERVICE.

The Division of Forestry was established July 1, 1880, by Congress. Its designation was changed by Congress to "Bureau of Forestry," becoming effective July 1, 1901, and changed to "Forest Service," becoming effective July 1, 1905.

DIVISION OF ACCOUNTS AND DISBURSEMENTS.

Growth of total force employed from July 1, 1881, to July 1, 1907.

Date.	Number employed.	Date.	Number employed.
July 1, 1881	2	July 1, 1895	10
July 1, 1883	2	July 1, 1897	10
July 1, 1885	2	July 1, 1899	10
July 1, 1887	3	July 1, 1901	12
July 1, 1889	9	July 1, 1903	16
July 1, 1891	11	July 1, 1905	22
July 1, 1893	11	July 1, 1907	31

DIVISION OF PUBLICATIONS.

The Division of Publications was established July 1, 1895, by Congress, in the act making appropriations for the Department of Agriculture for the fiscal year ending June 30, 1896, approved March 2, 1895; it absorbed and succeeded the "Division of Records and Editing," which was established July 1, 1890, by Congress, in the act making appropriations for the Department of Agriculture for the fiscal year ending June 30, 1891, approved July 14, 1890.

The work of illustrations and engravings necessary for the publications issued by the Department, and the fund appropriated by Congress therefor, were assigned to the Division of Records and Editing on July 1, 1894, by the Secretary of Agriculture.

The "Document and Folding Room" of the Department was placed in charge of the Chief of the Division of Publications, by order of the Chief Clerk of the Department, on July 1, 1896, and was transferred to the Division of Publications as the "Document Section" July 1, 1897, by Congress in the act making appropriations for the Department of Agriculture for the fiscal year ending June 30, 1898, approved April 23, 1897.

Growth of total force employed from July 1, 1881, to July 1, 1907, in the Division of Publications.

Date.	Number employed.	Date.	Number employed.
July 1, 1881	1	July 1, 1895	21
July 1, 1883	3	July 1, 1897	61
July 1, 1885	3	July 1, 1899	81
July 1, 1887	5	July 1, 1901	142
July 1, 1889	9	July 1, 1903	154
July 1, 1891	30	July 1, 1905	166
July 1, 1893	22	July 1, 1907	182

LIBRARY.

Growth of total force employed from July 1, 1881, to July 1, 1907.

Date.	Number employed.	Date.	Number employed.
July 1, 1881	1	July 1, 1895	2
July 1, 1883	1	July 1, 1897	6
July 1, 1885	1	July 1, 1899	6
July 1, 1887	1	July 1, 1901	8
July 1, 1889	2	July 1, 1903	11
July 1, 1891	2	July 1, 1905	16
July 1, 1893	1	July 1, 1907	15

OFFICE OF EXPERIMENT STATIONS.

The Office of Experiment Stations was established July 1, 1888, by act of Congress.

Growth of total force employed from July 1, 1889, to July 1, 1907.

Date.	Number employed.	Date.	Number employed.
July 1, 1889	8	July 1, 1899	60
July 1, 1891	26	July 1, 1901	122
July 1, 1893	18	July 1, 1903	106
July 1, 1895	27	July 1, 1905	116
July 1, 1897	38	Jnly 1, 1907	[a] 156

[a] Number of temporary emergency employees in the Office of Experiment Stations employed for short periods in the field in Nutrition and Irrigation and Drainage Investigations on July 1, 1907, was 18, making the total number employed 174.

OFFICE OF PUBLIC ROADS.

The Office of Public Road Inquiries was established July 1, 1893, by Congress. It was given a statutory organization, with the title Office of Public Roads, on July 1, 1905.

Growth of total force employed from July 1, 1893, to July 1, 1907.

Date.	Number employed.	Date.	Number employed.
July 1, 1893	1	July 1, 1901	12
July 1, 1895	5	July 1, 1903	26
July 1, 1897	7	July 1, 1905	41
July 1, 1899	6	July 1, 1907	56

Number of officers and employees in the different branches of the U. S. Department of Agriculture on July 1, 1907, showing the number stationed in Washington, D. C., and the number employed outside of Washington, D. C.

Branch of the Department.	Number of officers and employees.		
	Stationed in Washington, D. C.	Stationed outside of Washington, D. C.	Total.
Office of the Secretary	108	1	109
Weather Bureau	189	1,505	1,694
Bureau of Animal Industry	227	2,955	3,182
Bureau of Plant Industry	405	402	807
Forest Service	329	1,683	2,012
Bureau of Chemistry	134	116	250
Bureau of Soils	67	49	116
Bureau of Statistics	98	51	149
Bureau of Entomology	63	218	281
Bureau of Biological Survey	24	14	38
Division of Accounts and Disbursements	31	.....	31
Division of Publications	182	.....	182
Library	15	.....	15
Office of Experiment Stations	63	111	174
Office of Public Roads	27	29	56
Employed in connection with the erection of the Department's new building	10	1	11
Total	1,972	7,135	9,107

Statement of the number of persons, on July 1, 1907, occupying statutory positions, on what are known as the statutory rolls of the Department, being specific positions especially created by act of Congress making appropriations for the U. S. Department of Agriculture; also the total number of persons in the said Department paid from miscellaneous or lump-sum funds appropriated by act of Congress as aforesaid, in which specific positions are not created.

Bureau, Division, Office, etc.	Statutory.	Lump sum.	Total.
Office of the Secretary	103	6	109
Weather Bureau	183	1,511	1,694
Bureau of Animal Industry	63	3,119	3,182
Bureau of Plant Industry	191	616	807
Forest Service	150	1,862	2,012
Bureau of Chemistry	43	207	250
Bureau of Soils	30	86	116
Bureau of Statistics	76	73	149
Bureau of Entomology	17	264	281
Bureau of Biological Survey	6	32	38
Division of Accounts and Disbursements	31	.....	31
Division of Publications	148	34	182
Library	14	1	15
Office of Experiment Stations	30	144	174
Office of Public Roads	10	46	56
New building	.....	11	11
Total	1,095	8,012	9,107

Scientists in the entire U. S. Department of Agriculture on July 1, 1907.

Branch of the Department.	Number.	Branch of the Department.	Number.
Weather Bureau	150	Bureau of Entomology	76
Bureau of Animal Industry	882	Bureau of Biological Survey	18
Bureau of Plant Industry	408	Office of Experiment Stations	60
Forest Service	209	Bureau of Statistics	8
Bureau of Chemistry	106	Office of Public Roads	28
Bureau of Soils	78	Total	2,023

Summary showing the number of persons employed in the District of Columbia in the U. S. Department of Agriculture, by States, whence appointed, and the aggregate of salaries or compensation per annum.

Whence appointed.	Number.	Aggregate compensation.	Whence appointed.	Number.	Aggregate compensation.
Alabama	20	$19,950	Nevada	2	$2,100
Arizona	2	4,800	New Hampshire	15	19,420
Arkansas	18	15,120	New Jersey	24	34,910
California	23	31,230	New Mexico	2	2,200
Colorado	11	12,170	New York	133	170,956
Connecticut	19	27,812	North Carolina	40	47,400
Delaware	5	6,520	North Dakota	7	9,620
District of Columbia	391	316,778	Ohio	72	96,560
Florida	14	18,360	Oklahoma	11	15,000
Georgia	31	27,800	Oregon	6	5,420
Hawaii	2	2,720	Pennsylvania	109	132,784
Idaho	3	3,700	Porto Rico	5	3,700
Illinois	93	121,140	Rhode Island	5	4,680
Indiana	42	54,820	South Carolina	32	33,220
Iowa	54	77,720	South Dakota	7	10,130
Kansas	41	66,206	Tennessee	31	30,170
Kentucky	29	29,200	Texas	35	33,690
Louisiana	12	12,480	Utah	8	11,900
Maine	15	17,750	Vermont	12	14,270
Maryland	117	138,122	Virginia	136	122,746
Massachusetts	68	92,350	Washington	11	15,782
Michigan	61	86,200	West Virginia	23	27,340
Minnesota	31	45,990	Wisconsin	32	32,398
Mississippi	16	14,160	Wyoming	6	8,660
Missouri	52	66,240			
Montana	9	10,590	Total	1,970	2,240,714
Nebraska	24	35,730			

COMMISSIONERS AND SECRETARIES OF AGRICULTURE.

Name and length of service of each Commissioner and of each Secretary of Agriculture since the organization of the U. S. Department of Agriculture, July 1, 1862.

Name.	Rank.	Appointed under the Administration of President—	When appointed.	Service terminated.
Isaac Newton	Commissioner	Lincoln	July 1, 1862	June 19, 1867
John W. Stokes	do	Johnson	June 20, 1867	Dec. 4, 1867
Horace Capron	do	do	Dec. 5, 1867	July 31, 1871
Frederick Watts	do	Grant	Aug. 1, 1871	June 30, 1877
Wm. G. Le Duc	do	Hayes	July 1, 1877	June 30, 1881
Geo. B. Loring	do	Garfield	July 1, 1881	Apr. 3, 1885
Norman J. Colman	do	Cleveland	Apr. 4, 1885	Feb. 12, 1889
Do	Secretary	do	Feb. 13, 1889	Mar. 6, 1889
J. M. Rusk	do	Harrison	Mar. 7, 1889	Mar. 6, 1893
J. Sterling Morton	do	Cleveland	Mar. 7, 1893	Mar. 5, 1897
James Wilson	do	McKinley	Mar. 6, 1897	
Do	do	do	Mar. 6, 1901	
Do	do	Roosevelt	Mar. 6, 1905	

POSITIONS FILLED BY THE CIVIL SERVICE COMMISSION.

The following is a list of positions in the U. S. Department of Agriculture for which the U. S. Civil Service Commission hold semiannual, or when necessary special, examinations to provide lists of persons who, having passed the examination for some one of the following positions, have their names placed on lists, or registers, of persons who are eligible for certification by the Civil Service Commission to the Department of Agriculture when requested to do so by the Secretary of Agriculture, and from which certificates, selections, and appointments are made by the Secretary of Agriculture. (July 1, 1907.)

Architectural designer.
Artist.
Assistant chemist.
Assistant dairyman.
Assistant in arboriculture.
Assistant in dairy chemistry.
Assistant in dry land agriculture.
Assistant in grain standardization.
Assistant in soil bacteriology.
Assistant in sugar-beet investigations.
Assistant photographer.
Assistant physiologist.
Blacksmith.
Bookkeeper.
Cabinetmaker.
Carpenter.
Chemist.
Chemist aid.
Chief food and drug inspection chemist.
Civil engineer.
Civil engineer and draftsman.
Civil engineer and superintendent of construction.
Civil engineer student.
Clerk.
Clerk translator (French).
Compositor.
Constructing engineer.
Crop technologist.
Dairy inspector.
Dairyman.
Draftsman.
Editorial clerk.
Electrical and mechanical engineer.
Electrical engineer and draftsman.
Elevator conductor.
Engineer, Department service.
Engineer.
Farmer.
Farmer with knowledge or irrigation.
Farm superintendent.
Fireman, stationary.
Food and drug inspection chemist.
Food and drug inspector.
Forest assistant.
Forest guard.
Forest inspector.
Forest ranger.
Forest supervisor.
Gardener.
Horseshoer.
Horticulturist.
Irrigation engineer.
Irrigation manager.
Laboratory aid.
Laboratory aid and engineer.
Laboratory assistant.
Laboratory assistant in timber tests.
Laboratory assistant in wood chemistry.
Laboratory helper.
Laboratory inspector.
Laborer, unskilled.
Land law clerk.
Law clerk.
Librarian.
Library assistant.
Lithographer's helper.
Meat inspector.
Messenger.
Messenger boy.
Microanalyst.
Observer.
Photographer.
Plumber.
Press feeder.
Pressman.
Printer's assistant.
Proof reader.

Repair man.
Scientific aid.
Scientific assistants, qualified in some one of the following subjects:
(1) Agricultural and commercial statistics, statistical literature, and statistical methods.
(2) Agronomy.
(3) Agrostology.
(4) Animal bacteriology.
(5) Animal husbandry.
(6) Animal pathology.
(7) Biochemistry.
(8) Chemistry, including obligatory questions in general and analytical chemistry and optional questions in organic, physical, physiological, and agricultural chemistry.
(9) Dairy bacteriology.
(10) Dairying.
(11) Economic botany.
(12) Entomology.
(13) Farm management.
(14) Game protection.
(15) Geographic distribution of animals and plants.
(16) Horticulture.
(17) Library science.
(18) Meteorology.
(19) Mycology.
(20) Physiology and nutrition of man.
(21) Plant bacteriology.
(22) Plant breeding.
(23) Plant pathology.
(24) Plant physiology.
(25) Pomology.
(26) Rural engineering, including obligatory questions in the general subject of rural engineering and optional questions in road making, irrigation, and drainage.

Scientific assistant, qualified in some one of the following subjects—Continued.
(27) Seed testing.
(28) Soil chemistry, physical chemistry, and analytical chemistry.
(29) Soil management.
(30) Soil physics.
(31) Soil surveying.
(32) Systematic and economic mammalogy.
(33) Systematic and economic ornithology.
(34) Veterinary zoology.
Also in—
(1) Editing, indexing, and proof reading.
(2) French.
(3) German.
(4) Italian.
(5) Russian.
(6) Spanish.
Skilled laborer.
Stenographer.
Stenographer and typewriter.
Supervising drainage engineer.
Tagger.
Teamster.
Telegrapher.
Testing assistant.
Topographic aid.
Typewriter.
Typewriter and stenographer.
Veterinarian.
Veterinary inspector.
Viticultural superintendent.
Watchman.
Wireman.

REPORT OF THE SOLICITOR.

U. S. DEPARTMENT OF AGRICULTURE,
OFFICE OF THE SOLICITOR,
Washington, D. C., September 15, 1907.

SIR: I submit herewith a report on the work of the Office of the Solicitor for the fiscal year ended June 30, 1907.

Respectfully,

GEO. P. MCCABE,
Solicitor.

Hon. JAMES WILSON, *Secretary.*

DUTIES OF THE SOLICITOR.

The principal duties of the Solicitor of the Department of Agriculture, as outlined in your General Order No. 85, of June 17, 1905, comprehend six distinct divisions of work. He is required—

1. To act as legal adviser to the Secretary of Agriculture.
2. To prepare and to exercise supervision over all legal papers to which the Department is a party.
3. To prepare and to exercise supervision over all communications to the Department of Justice, the various officers thereof, and United States attorneys.
4. To examine and verify the legality, in advance of issue, of all orders and regulations affecting the public promulgated by the Secretary under statutory authority.
5. To represent the Department in all legal proceedings arising under the various laws intrusted to the Department for execution.
6. To prosecute applications of employees of the Department for patents on processes or devices originated in connection with Department work.

LEGAL ADVICE.

During the year several written opinions were rendered to the Secretary upon the legality of proposed Department action. In addition, almost daily, oral and written opinions have been given to the Secretary and to the various chiefs of bureaus upon the legal phases of the appropriation act and the various laws intrusted to the Department for execution.

Several important confidential investigations of a quasi legal character have been conducted, under the direction of the Secretary, of which it is impracticable, if not improper, to give a detailed account.

LEGAL PAPERS.

The business of the Department is steadily increasing, as is shown by the number and variety of contracts entered into during the fiscal year. With this increase arises a proportionate augmentation of the work of the Office, where all these contracts are prepared in the first instance and passed upon before final execution by the Secretary.

DEPARTMENT CONTRACTS.

SUPPLIES.—The preparation of contracts for supplies for the Department, while more or less a routine matter, requires considerable time and a high degree of care. It is the policy of the Department to require, with many of the contracts for these supplies, bonds for faithful compliance with the terms of the instruments. Many questions affecting the validity of these bonds must be passed upon before acceptance, and experience has shown the necessity for watchfulness on the part of this Office to protect the interests of the Department. Despite the plain and explicit directions accompanying each blank contract and bond sent to the contractors, it frequently becomes necessary to return the papers for correction in essential particulars, and even then errors and imperfections are discovered upon a reexamination.

During the last fiscal year the Solicitor prepared and perfected 106 contracts, and, in most instances, accompanying bonds, for the supplies of the Department.

TELEPHONE SERVICE.—The annual contract with the Chesapeake and Potomac Telephone Company for the Department's telephone service was prepared by the Office.

CONTRACTS FOR THE SEVERAL BUREAUS AND OFFICES.

Extension of operations of several bureaus of the Department in various localities in the United States during the year has greatly increased the work of this Office. The Solicitor prepares the necessary instruments from data furnished by the respective bureaus.

BUREAU OF PLANT INDUSTRY.—During the year there were prepared and perfected 184 contracts for the Bureau of Plant Industry for the carrying on of its experiments in various localities throughout the country. Most of these involved, in effect, the leasing of lands for the purposes of the Bureau, necessitating a very careful preparation of the instruments to conserve the interests and success of the Department.

BUREAU OF ANIMAL INDUSTRY.—The contracts for the Bureau of Animal Industry relate almost exclusively to experiments in animal breeding and diseases, conducted in cooperation with stations established and maintained by the States. During the year 32 contracts for these purposes were prepared and perfected.

WEATHER BUREAU.—During the year the Solicitor passed upon 59 contracts for the Weather Bureau, 50 of which were for telegraph and telephone service in connection with its forecasts.

FOREST SERVICE.—During the first session of the Fifty-ninth Congress $15,000 were appropriated for the erection of a wire fence and necessary sheds on the Wichita Forest and Game Preserve, in order to provide a range for the buffalo herd presented to the Government by the New York Zoological Society, the fence and sheds to be erected under the supervision of the Forest Service. This contract involved the building of about 14 miles of fence, and was drawn by the Solicitor early in the fiscal year.

BUREAU OF CHEMISTRY.—Soon after the passage of the Food and Drugs Act of June 30, 1906, the Bureau of Chemistry began active preparations for enforcement of the law. This necessitated the equipment of laboratories in several cities of the United States and the preparation of contracts for this purpose. Of the 26 contracts prepared by the Office for this Bureau during the last fiscal year, almost the whole number were for furnishing and installing such equipment.

OFFICE OF EXPERIMENT STATIONS.—Six contracts were prepared and perfected for the Office of Experiment Stations.

BUREAU OF ENTOMOLOGY.—Twenty contracts were prepared and perfected for the Bureau of Entomology.

OFFICE OF PUBLIC ROADS.—Three contracts were prepared and perfected for the Office of Public Roads.

LEASES.

During the year the various branches of the Department, in furtherance of their operations throughout the United States, entered into 253 leases for office accommodations and facilities for transacting the business of the Department. These were all drawn and perfected by this Office.

BONDS.

Several of the officers and employees of the Department are required to give bond to the United States for faithful and accurate disbursement and account of the funds intrusted to them. Fourteen of these bonds were prepared during the year.

RECAPITULATION OF CONTRACTS AND LEASES.

The accompanying table is a recapitulation of the foregoing contracts and leases prepared in this office during the year.

Table of contracts and leases prepared during the fiscal year from July 1, 1906, to June 30, 1907, inclusive.

Bureau, Division, or Office.	Contracts.	Leases.	Bureau, Division, or Office.	Contracts.	Leases.
Bureau of Plant Industry	184	32	Bureau of Entomology	20	6
Bureau of Animal Industry	32	72	Bureau of Soils	0	3
Weather Bureau	59	103	Office of Public Roads	3	4
Forest Service	1	15	Chief Clerk	0	1
Division of Publications	0	3	Department	107	0
Bureau of Chemistry	26	10			
Office of Experiment Stations	6	4	Total	438	253

Total of contracts and leases 691.

COMMUNICATIONS TO THE DEPARTMENT OF JUSTICE.

TWENTY-EIGHT-HOUR LAW.

During the fiscal year enforcement of the twenty-eight-hour law was prosecuted with much vigor by this Office. The Office handles all the cases arising under this law. Section 4 of the act requires United States attorneys to prosecute all violations of the act reported by the Secretary of Agriculture. The administration of the law is intrusted to the Bureau of Animal Industry, through whose inspectors, stationed throughout the United States, the facts connected with these violations are procured. The reports of these inspectors are referred to the Solicitor. When he determines from the evidence submitted that a violation has occurred he prepares, for the signature of the Secretary, the necessary letter to the Department of Justice, outlining the facts upon which the proper United States attorney is to base his complaint for recovery of the penalty prescribed by the act. There is necessarily considerable correspondence between the Bureau of Animal Industry and the Solicitor in reference to these cases. It is frequently found that the report of the inspector, or the person accompanying the shipment, is too meager, and it becomes necessary to procure a more complete report on points specified by the Solicitor. In order to follow the proceedings in the court, the Department has generally requested the United States attorneys to furnish it copies of all the papers filed in the suits. These pleadings are all referred to this Office. These requests have invariably been complied with promptly and courteously. When the papers reach the Solicitor they are carefully examined with a view to suggestions that may be helpful in the successful maintenance of the suits. A full record of each case referred to this Office is preserved in permanent form and properly indexed.

During the year 677 cases involving violations of the twenty-eight-hour law were transmitted to the Department of Justice through this Office. Eight were dropped for insufficient evidence or for other cause. Judgment was rendered for the Government in 16, resulting in collection of penalties to the amount of $6,750. Six hundred and fifty-three cases were pending at the close of the fiscal year. The appended table shows the details of the 16 cases which resulted in judgments for the Government.

Statistical summary of suits under the twenty-eight-hour law resulting in judgment for the Government during fiscal year from July 1, 1906, to June 30, 1907.

Case No.	Railroad involved.	Judicial district.	Date of judgment.	Penalty assessed.	Costs assessed.
255	Northern Pacific	Minnesota	April	$500.00	
275	do	do	do	500.00	
287	do	do	do	500.00	
303	do	do	do	500.00	
372	do	do	do	500.00	$5.32
373	do	do	do	500.00	
401	do	do	do	500.00	5.47
424	Rock Island	Kansas	Apr. 13	200.00	21.60
425	do	do	do	100.00	
486	Great Northern	Washington, western district.	May 2	200.00	22.42
546	San Pedro, Los Angeles & Salt Lake.	Nevada	May 27	500.00	33.20
548	do	do	do	500.00	
719	Northern Pacific	Minnesota	April	500.00	
720	do	Oregon	June	250.00	
780	do	Minnesota	do	500.00	
781	do	do	do	500.00	

16 cases; fines recovered, $6,750; costs recovered, $88.01.

It will be seen from the foregoing summary that the maximum penalty of $500 was recovered in each of the suits, except four, and in those there were extenuating circumstances connected with the violations.

Needless to state, the collection of the evidence in all of these cases has been a costly undertaking.

ORIGIN OF PRESENT LAW.

It may not be amiss to give briefly the history of the effort to enforce humane treatment of live stock in the course of transportation from one State or Territory to another. The original statute, which was commonly referred to as the twenty-eight-hour law, was enacted by the Forty-third Congress, and became a law by the approval of President Grant on March 3, 1873. It formed, at the time of its repeal, Sections 4386–4390 of the United States Revised Statutes. It prohibited the confinement in cars, boats, or other vessels, for a period longer than twenty-eight consecutive hours, of cattle, sheep, swine, or other animals which were being conveyed from one State to another, without unloading the same for food, rest, and water for a period of at least five consecutive hours, unless prevented by storm or other accidental cause. The penalty for a violation of the statute was a fine of from $100 to $500 for each case. The provision for unloading did not apply when animals were carried in cars, boats, or other vessels in which they could and did have proper food, water, space, and opportunity to rest.

In 1891 Mr. Rusk, then Secretary of Agriculture, distributed thousands of circular notices addressed to all railroad companies transporting cattle within the United States, calling their attention to the provisions of the law, and urging them to arrange their train service accordingly and to provide necessary feeding and watering stations. In 1895 Secretary J. Sterling Morton distributed similar notices. On March 24, 1897, the present Secretary caused a warning circular to be mailed to the railroad companies throughout the United States, and also caused it to be posted in conspicuous places about stock yards and railroad stations. During all this time the carriers paid little, if any, attention to the law. The Department then put special agents on the road to accompany stock trains in order to detect and report violations of the law. A large number of cases were collected by these agents and transmitted to the Department of Justice for prosecution in the Federal courts. On account of difficulty in securing evidence, and in some few cases on account of technical requirements of United States attorneys, only a small number of convictions were secured. In 1905 the Secretary of Agriculture instructed the Chief of the Bureau of Animal Industry to require the inspectors of his Bureau, particularly those inspectors stationed at points where large consignments of live stock were received, to use the utmost diligence in discovering and reporting violations of the law. As a result of these instructions nearly 2,000 cases were reported to the Department; a number of these cases were transmitted to the Department of Justice for prosecution, and more than $10,000 were collected in fines and costs.

Believing it more desirable to secure a reasonable compliance with the law than to mulct the roads in fines, whenever a large number of

alleged violations had been reported against a particular railroad the road was called upon to give the Department satisfactory assurances that the law would be respected in the future, and that no more violations would occur. When these assurances were received, a proportionate number of the cases against that road were sent to the Department of Justice for prosecution, with the understanding that the road in each case would confess judgment and pay the minimum penalty, the rest of the cases being held suspended during the continued observance of the law.

In the fall of 1905, when the ranges were being harvested, it was shown that the yard and chute facilities of the railroad companies were entirely inadequate to unload and care for properly the very large number of cattle then being transported to market. The railroads had assured the Department that the law would be observed in the future. Knowing that the Department was closely watching and reporting each violation of the law as it occurred, they were naturally making every effort to comply with the letter of the law, and were unloading the cattle in miserably equipped pens for food, rest, and water; in many cases they were even unloading them upon the open prairie, to the great detriment and damage of the cattle and to the prejudice of the owners and shippers. In view of these facts, and in accordance with your statement to representative stockmen and railroad officials, it was agreed that the Department would not, at that time, report to the Department of Justice for prosecution those cases in which the time limit fixed by the statute was exceeded by a small margin, when it was apparent that the railroads were doing their utmost to comply with the law, and when it was apparent also that if the cattle were unloaded they would suffer greater hardship than if they were carried on to their destination without being unloaded.

About that time the Secretary conferred with a number of the best informed, most influential, and most heavily interested stockmen of the United States, and also with commission men and others in the cattle trade. These people were unanimously of the opinion that it would be to the advantage of the cattle and of the owners thereof to extend from twenty-eight hours to thirty-six hours the time limit during which cattle might be confined without food, rest, and water.

Based upon a careful observation of the workings of the law, the treatment of the cattle, and the advantage of the shippers and owners of live stock, the opinion was entertained in the Department that if certain other amendments to the law, hereinafter described, should be adopted, the time during which cattle might be confined in cars without food, rest, and water could safely be extended from twenty-eight hours to thirty-six without disadvantage to the cattle.

In this connection it is interesting to note that section 4388, Revised Statutes (this provision being read into the act of June 29, 1906), provided that "Where animals are carried in cars * * * in which they can and do have proper food, water, space, and opportunity to rest, the provisions in regard to their being unloaded shall not apply." It may be that in this provision of the law lies the solution of the question. One western road, which possibly handles more cattle than any other railroad in the world, has provided cars properly equipped and sufficient in number to care for all the business which it handles. However, the question of rest is an unsettled one, because

of the fact that when cattle are loosely loaded to permit them to lie down, and are transported in long trains, they are liable to jamming and injury to a greater extent than when they are more closely packed.

The great western markets for live stock are Chicago, East St. Louis, and the Missouri River towns. The ranges and feed lots are so located that if the railroads give the shippers anything like reasonable service by far the larger proportion of the cattle can be transported to market within thirty-six hours, and this, with a thirty-six-hour limit, should obviate the necessity for unloading the greater part of the cattle. With a thirty-six-hour limit and reasonable speed it is not necessary to unload cattle from any locality more than twice. When market can be reached in thirty-six hours, it is more humane and better for the cattle to carry them through to destination without unloading than to unload them for food, rest, and water at the end of twenty-eight hours.

The foregoing points were all discussed and debated with the railroads, and as a result this Department virtually recommended to Congress the passage of an act containing the following provisions and repealing sections 4386–4390, Revised Statutes:

1. For reasons hereinbefore stated, provide that the time during which animals may be confined in cars without food, rest, and water be extended from twenty-eight hours to thirty-six hours.

2. Provide that the cattle must be loaded and unloaded in an humane manner and into properly equipped pens. (This was a serious omission in the law in force at the time.)

3. Provide that the owner or shipper of the animals may furnish the necessary food if he so desires. Many yard companies had charged most exorbitant fees for supplying feed, and as the law gave a lien on the stock for food furnished, shippers and owners of stock had been in many cases outrageously overcharged.

4. Provide that every common carrier, other than by water, engaged in the interstate transportation of live stock, shall maintain on all stock trains an average minimum rate of speed of not less than 18 miles per hour, from the time when such live stock are loaded upon or into the cars and made part of the train until the train reaches the destination or junction point for delivery to another common carrier, with a deduction for the time necessarily lost in feeding, resting, and watering, and in the unloading and reloading for those purposes, and for such other time as the stock may be delayed by storm or by other accidental causes which can not be anticipated or avoided by the exercise of due diligence and foresight.

In many cases the railroads have not given the shippers the service to which they are justly entitled. It had frequently happened that stock trains had been delayed for dead freight and for trivial causes, and by reason of the large amount of tonnage which one engine is compelled to handle a slow rate of speed had been maintained and stock had been detained upon the road for an unreasonable time. To extend the time during which cattle may be confined in cars without food, rest, and water without requiring a reasonable speed minimum, it appeared to the Department, would not benefit the shipper or result in more humane treatment of the animals. The laws of one and perhaps more of the States require a reasonable speed minimum to be maintained on all trains transporting live stock within the borders of the State.

5. The statute should be broadened to cover practically every common carrier of live stock, including a receiver of any company. The Supreme Court has held in the case of the United States *v.* Harris (177 U. S., 305) that existing law does not include the receiver of a railroad company. At that time a certain railroad, then in the hands of a Federal receiver, was confining animals fifty and even sixty hours without food, rest, and water.

6. The statute should be amended to cover the transportation of animals from a State to a Territory or from a Territory to a State. The United States district court for the district of Kansas held in the case of The United States *v.*

The St. Louis and San Francisco Railroad Company (an unreported case) that the law did not cover a shipment from a Territory to a State, the wording of the statute being "* * * which transports live stock from one State to another."

All of these provisions, with the exception of No. 4, making a provision for a minimum speed limit, were incorporated into the act passed by Congress on June 29, 1906 (34 Stat., 607). The passage of the act was vigorously sought by the live stock and railroad interests and as vigorously fought, in committee and on the floor, by members of the various humane societies throughout the United States. When the bill was passed the humane societies carried the fight to the President and asked him to veto the bill. It was found on reference of the matter to the Department that assurances had been given by representative railroad men throughout the United States that if the time limit were extended to thirty-six hours at the request of the shipper the railroads would be able to obey the law, and would obey it. It was also made apparent that the stockmen generally throughout the United States were in favor of the bill, even though the provision for a minimum speed limit had been omitted. It was believed that it would be possible, if the bill became a law, to secure more humane treatment for cattle in transit, independent of the number of hours involved, by reason of the provisions requiring humane loading and unloading, properly equipped pens, and a proper amount of food and water. In view of the foregoing, the bill was duly signed and became a law. Since that time every effort possible has been made by the Department to secure a compliance with the law, and it is gratifying to state that some of the large railroads of the country have uniformly observed the law. It is true, as an examination of the cases will disclose, that on the other hand, a large number of railroads have disregarded the law. Some of the roads which have persistently violated the law were represented before the Department at the time the matter was before Congress, and their representatives were very strongly in favor of its enactment, claiming that the roads they represented did not wish to be put in the position of lawbreakers, and that if a reasonable statute, such as they conceived the measure then before Congress to be, were passed, the roads they represented would obey it without question.

ATTITUDE OF OFFENDING RAILROADS.

It is apparent, from the pleadings filed by the various railroads, that resort is to be had to every legal technicality to avoid the payment of fines for violations of the law. While it is proper for a defendant to exhaust his defenses, in view of the fact that this legislation was eagerly sought by the railroads, it would perhaps be more seemly, and possibly just as good policy, if the railroads were to concentrate their energies upon an attempt to obey the provisions of the statute.

LACEY ACT.

During the year 8 cases involving violations of the act of Congress of May 25, 1900, commonly known as the Lacey Act, prohibiting interstate commerce in game killed in violation of local laws, were referred through this Office to the Department of Justice. The disposition of these cases is shown in the appended table.

Cases under the Lacey Act referred to Department of Justice during fiscal year from July 1, 1906, to June 30, 1907.

Case No.	Defendant.	Judicial district.	Offense charged.	Disposition of case.
51	Chas. Thompson..	North Dakota.	Shipment of game in unmarked trunks.	Judgment upon demurrer for defendant.
51a	A. R. Spear.....	.....do.....	.....do.....	Do.
88	Wm. Binkley.....	Idaho.....	Shipment of heads, hides and horns of elk killed in violation of local laws and marked as "household goods."	Fined $200; paid.
88	Chas. Purdy.....	.....do.....	.....do.....	Fined $200; sentenced to jail in default of payment.
91	Escanaba Fish Company.	Michigan.....	Shipment of deer killed in violation of local laws and marked as a "barrel of fish."	Pending.
92	Fred Olin.....	Wisconsin.....	Shipment of deer killed in violation of local laws and marked as "hides."	Do.
93	Proudfit & Ormsby.	Colorado	Shipment of prairie chickens as "dressed poultry."	Do.
94	Northern Produce Company.	Texas.....	Shipment of wild ducks as "dressed poultry."	Do.

In cases Nos. 51 and 51*a* the defendants demurred to the information upon the ground that no public offense was stated against them. The demurrers involved a construction of section 4 of the act, which provides:

> That all packages containing such dead animals, birds, or parts thereof, when shipped by interstate commerce, as provided in section 1 of this act, shall be plainly and clearly marked, so that the name and address of the shipper and the nature of the contents may be readily ascertained on inspection of the outside of such packages.

The court held that the word "such" in the first line of section 4 referred to birds which had been killed in violation of local laws, and to birds the export of which was not prohibited by the laws of the State where killed, and that, therefore, as the ducks in question, for aught that appeared in the information to the contrary, were lawfully killed, and as the law of North Dakota prohibited export of ducks, the information did not charge an offense, and the demurrer was well founded. The cases are reported in 147 Fed., pp. 637 and 640.

This is the first case decided by a court, directly construing the meaning of the word "such" in section 4. There were, and still are, among able lawyers, three diverse opinions upon this question. It is held by some that the word refers to all dead wild animals and birds shipped in interstate commerce. Others contend that it refers only to wild animals and birds killed in violation of local laws and shipped in interstate commerce, and still others that it restricts the offense, as held by the court in this case. In view of these three opinions, all advocated by equally respectable authorities, it is unfortunate that the first case requiring the construction of this section should have been decided against the Government.

The cases against Binkley and Purdy (No. 88) created widespread interest, because of the wholesale destruction of elk by these defendants, and further because there was strong evidence that their operations had been conducted largely in the Yellowstone National Park. The result of the prosecutions will, it is hoped, have a deterrent influence upon like-disposed offenders in the future.

TRESPASS ON BIRD RESERVES.

Efforts on behalf of the Department to prevent wanton and willful trespass and destruction of birds on the several bird reserves, set apart by the President, in his Executive orders, for the use of the Department of Agriculture as breeding grounds for native birds, disclosed the absence of any Federal statute authorizing a prosecution for this offense. The matter was brought to the attention of the Fifty-ninth Congress and resulted in the passage of the act of June 28, 1906 (34 Stat., chap. 3565, p. 536), prohibiting hunting, trapping, capturing, willfully disturbing or killing any bird or the taking of its eggs on any lands of the United States set apart or reserved as breeding grounds for birds by any law, proclamation, or Executive order, and providing a maximum penalty of $500 fine or imprisonment for six months, or both, for violation of the act.

In November, 1906, four months after the approval of the act, information reached the Department that three men living at Leonard, N. Dak., had been recently depredating upon the Stump Lake Bird Reservation, situated in Nelson County, of that State. A statement of the circumstances attending the trespass was obtained and the matter was submitted, through this Office, to the Department of Justice. The offenders were promptly arraigned in the United States district court for that State, plead guilty, and were fined $25 each.

CONVERSION OF PROPERTY OF THE WEATHER BUREAU.

During the year the Weather Bureau transmitted to this Office complaints in three cases, involving retention of certain valuable weather-testing instruments by former cooperative observers of the Bureau. Two of the cases were in Porto Rico and the other in Illinois. Efforts of the Bureau having failed to accomplish restitution of the property, this Office took the matter up with the Department of Justice. After considerable correspondence between this Office, the Department of Justice, and the delinquents the instruments were returned.

CASES IN THE COURT OF CLAIMS.

There were pending in the Court of Claims during the fiscal year four suits against the United States based upon transactions arising in the Department of Agriculture and in which the Department was interested. The cases were as follows:

Lord & Hewlett *v.* The United States (No. 24809): The firm of Lord & Hewlett, of New York City, brought suit against the Government in the Court of Claims, alleging that they had a contract with the Department of Agriculture for furnishing the plans for the new building now under construction. The Office of the Solicitor has devoted considerable time during the year to the procuring of a large amount of evidence for use in defending this suit. The case was still pending at the close of the year.

New York Market Gardeners' Association *v.* The United States (No. 22742): The New York Market Gardeners' Association, on January 2, 1902, filed a petition in the Court of Claims for the recovery

of $18,229.57, alleged to be still due it on account of a contract entered into with the Department of Agriculture in June, 1900, for supplying seed for distribution. The Department held that the association had failed to supply a part of the seed required by the contract, had not supplied some of the seed in time, and otherwise had failed to comply with the terms of the contract. The Government, therefore, for its own protection, filed a counter claim for $25,000, alleging nonperformance and fraud in the execution of the contract. This Office assisted in the taking of testimony for the United States and afterwards in the proceedings in the Court of Claims. The case was pending at the close of the year.

Crary, Packer, and Knott *v.* The United States (No. 21428): The claimants in this case asked for a judgment for $9,193 for a consignment of sheep which they had purchased in Mexico and brought into the United States, and which were inspected at El Paso, Tex., by officers of the Department of Agriculture, declared to be infected with disease, and slaughtered by said officers. The case has been pending for several years, a large number of witnesses have been examined for the Government, and every lawful means has been exhausted to supply the attorneys for the Government with all the testimony obtainable to establish the defense to the suit. The Solicitor has, throughout the entire pendency of the suit, cooperated with the Department of Justice in procuring this testimony and in preparing the pleadings in the Court of Claims. The case remained undecided at the close of the year.

Thomas H. Reeves *v.* United States (No. 30015): In May of the last fiscal year the Department of Justice directed a request to this Department for all the facts, circumstances, and evidence in its possession connected with the claim of Reeves (a former statistical agent of this Department) against the United States for the recovery of his salary for the year 1901, which had been disallowed by the disbursing officer of the Department upon the ground that a retired army officer could not receive a salary as an employee of the Department and at the same time receive pay as a retired officer of the Army. The request was referred to the Solicitor, and a full and complete reply was prepared covering the facts and the rulings of the Comptroller of the Treasury, touching the matter. The case was pending at the close of the year.

RENOVATED BUTTER.

In view of the conflict of opinions rendered by the United States district court for the northern district of New York and by the United States district court of Connecticut, construing the provisions of section 5 of the act of May 9, 1902, entitled "An act to make oleomargarine and other dairy products subject to the laws of any State or Territory or District of Columbia into which they are transported," etc., it was very desirable that a decision of the Supreme Court of the United States be had upon the question as to whether the statute and the regulations of the Treasury Department and the Department of Agriculture relating thereto, prohibiting interstate shipment of renovated butter which bore no stamps and caution notices prescribed by the act and regulations, applied to persons other than manufacturers. As the law stood at the time of the

rendition of the decision in the case of United States *v.* Bohl (125 Fed., 625), the Government could not appeal from the adverse decision then rendered, hence the impossibility of having the decision reviewed by the Supreme Court. But Congress, by act of March 2, 1907, has provided for an appeal on behalf of the United States on matters of law. Accordingly, in May, 1907, the Department having received evidence of a shipment of unmarked renovated butter by a retail dealer in Jersey City, N. J., to New York City, the facts in the case were transmitted to the Department of Justice with a request for proper action by the United States attorney in New Jersey. The case was in the hands of the United States attorney at the close of the fiscal year.

FALSIFICATION OF ACCOUNTS.

Information having reached the Department that one of the former employees of the Bureau of Animal Industry, in Wyoming, had inserted in his expense account false items, the Solicitor, in June last, prepared a statement of the evidence in the case for transmission to the Department of Justice. The time still remaining in the fiscal year was so short that no conclusive action could be taken before its expiration, and the case was pending at the close of the year.

SUPPRESSION OF CONTAGIOUS DISEASES OF DOMESTIC ANIMALS.

Under the act of May 29, 1884, "An act for the establishment of a Bureau of Animal Industry, to prevent the exportation of diseased cattle, and to provide means for the suppression and extirpation of pleuro-pneumonia and other contagious diseases among domestic animals," four cases were pending or finally disposed of during the fiscal year 1907. The evidence in all but one of these cases had been transmitted to the Department of Justice before the fiscal year began. Case No. 90 was sent to the Department of Justice in February, 1907. In case No. 70 the Government was unable to prove that the defendant had knowledge of the infection of the sheep, and as the proof of that fact was essential to a conviction under the act of 1884 the case was dismissed by the court.

The appended table shows the nature of the offenses charged and the disposition of these cases.

Cases under the act of May 29, 1884, for the suppression of contagious diseases of animals, pending or finally settled during the fiscal year July 1, 1906, to June 30, 1907.

Case No.	Defendant.	Judicial district.	Offense charged.	Disposition of case.
70	R. C. Campbell...	Kentucky, eastern district.	Shipment of 17 lambs infected with scabies from Kentucky to Ohio.	Judgment for defendant, Oct., 1906. No proof of guilty knowledge of infection.
74	J. K. Smith.....	.....do.....	Shipment of 220 lambs infected with scabies from Kentucky to Ohio.	Mistrial, Oct. 19, 190 Continued.
75	T. McClintock & Son.	.....do.....	Shipment of 221 sheep infected with scabies from Kentucky to Ohio.	Plead guilty; fined $100, Oct., 1906.
90	Richards & Roberts.	Wisconsin, western district.	Shipment of 108 sheep infected with scabies from Wisconsin to Chicago.	Pending July 1, 1907.

QUARANTINE LAW AND REGULATIONS.

During the year much attention was given by the Office to the cases arising under the act of March 3, 1905, "An act to enable the Secretary of Agriculture to establish and maintain quarantine districts, to permit and regulate the movement of cattle and other live stock therefrom and for other purposes." A number of these cases came over from the last preceding fiscal year, and were either disposed of during the year or were still pending on July 1, 1907. The preparation of these cases for the Department of Justice and subsequent correspondence with the United States attorneys involves considerable time and care and constitutes an important phase of the duties of the Office. In four of the cases the defendants were fined $100 each. The appended table shows the character of these offenses and the disposition made of the cases:

Cases under quarantine act of March 3, 1905, pending or finally settled during the fiscal year July 1, 1906, to June 30, 1907.

Case No.	Defendant.	Judicial district.	Offense charged.	Disposition of case.
48	John Fort	North Dakota	Movement of stock, not dipped or inspected, from quarantined area in South Dakota to North Dakota.	Indicted November, 1906. Arrested in South Dakota, January, 1907, for transfer to North Dakota. United States attorney reported Jan. 31, 1907, that he was advised by attorney for defendant that he intended to plead guilty.
48	Eugene Fort	do	do	Do.
48a	Wm. Perkins	do	do	Do.
50	E. E. Coffey	Oklahoma	Movement of 91 cattle from Roger Mills County, Okla. (quarantined area), to Texas.	Defendant indicted.
59	Hiram Silers	Missouri, western district.	Movement of 43 cattle from quarantined area in Oklahoma into Missouri.	Plead guilty October, 1906; fined $100 and costs.
59	J. E. Hodges	do	do	Do.
77	John Oleson	Idaho	Movement of 4,500 sheep from Idaho to Oregon without permit and inspection.	Pending March, 1907, awaiting procurement of witnesses for the Government.
79	John Gange	South Dakota	Shipment of about 20 sheep, infected with scabies and uninspected, from South Dakota to Chicago.	Plead guilty Oct. 13, 1906; fined $100.
80	Samuel Sweitzer	do	Shipment of 20 cattle infected with scabies, from South Dakota to Iowa.	Plead guilty Sept. 21, 1906; fined $100.
82	James Caspar	Oklahoma	Movement of 122 cattle, not dipped or inspected, from quarantined area to open area, in the Territory.	Referred to Department of Justice Oct. 29, 1906; pending.
95	J. M. Miller	North Carolina, western district.	Movement of 1 cow, not dipped or inspected, from South Carolina to North Carolina.	Referred to Department of Justice Apr. 17, 1907; pending.

In addition to the cases affecting the Bureau of Animal Industry submitted to the Department of Justice for prosecution, the Bureau referred to this Office during the year 215 complaints against railroads for violation of Quarantine Regulations 14 (*d*) and 21. One hundred and nine of these involved infractions of Regulation 14 (*d*), which requires the officers of transportation companies to securely affix to each side of every car carrying interstate shipments of cattle from modified quarantined areas a durable placard not less than 5½

by 8 inches in size, on which shall be printed, in letters not less than 1½ inches high, the words "Southern cattle." One hundred and six involved infractions of Regulation 21, requiring officers of transportation companies to affix to each side of each car carrying interstate shipments of cattle a similar placard, bearing the words "Uninspected cattle" or "Uninspected exposed cattle," as the case may be. The Office in every case took the matter up with the general counsel for the railroad.

It was shown after careful investigation of these cases that the transportation companies had uniformly adopted methods for compliance with these regulations, and the violations were due in the main to accident, and, in a few instances, to misconception of the terms of the regulations. Each company protested its desire to comply strictly with the law and regulations and submitted such extenuating circumstances connected with the infraction of the regulations, accompanied with assurances of special precautions to prevent a recurrence thereof, that it was considered undesirable, at the time, to press the matters through the courts.

The appended table shows the offending railroad and the regulations violated.

Violations of the quarantine regulations by various railroads during the fiscal year ended June 30, 1907.

Name of railroad.	Number of reported violations of Regulation 14.	Number of reported violations of Regulation 21.	Total.
Chicago, Burlington and Quincy	1	0	1
Cincinnati, New Orleans and Texas Pacific	5	0	5
Chicago, Rock Island and Pacific	0	2	2
Chicago Great Western	0	47	47
Cleveland, Cincinnati, Chicago and St. Louis	7	0	7
Denver and Rio Grande	0	1	1
Frisco System	21	1	22
Great Northern	0	8	8
Galveston, Harrisburg and San Antonio	1	0	1
Gulf, Colorado and Santa Fe	1	0	1
Illinois Central	3	5	8
Louisville and Nashville	8	0	8
Lake Shore and Michigan Southern	4	0	4
Minneapolis, St. Paul and Sault Ste. Marie	0	12	12
Missouri, Kansas and Texas	13	1	14
Mobile and Ohio	1	0	1
Midland Valley	11	0	11
Northern Pacific	0	22	22
Nashville, Chattanooga and St. Louis	1	0	1
Oregon Short Line	0	2	2
Oregon Railroad and Navigation Co	0	2	2
Pennsylvania	1	0	1
Pittsburg, Fort Wayne and Chicago	2	0	2
Richmond, Fredericksburg and Potomac	1	0	1
Rio Grande Western	0	1	1
Santa Fe System	3	1	4
Southern	2	0	2
St. Louis, Iron Mountain and Southern	13	0	13
Southern Pacific	1	0	1
St. Louis Merchants' Bridge Terminal	1	0	1
St. Louis, Brownsville and Mexico	1	0	1
St. Louis Southwestern	1	0	1
Wilmar and Sioux Falls	0	1	1
Wabash	4	0	4
Wichita Valley	2	0	2
Grand total	109	106	215

MEAT INSPECTION LAW.

The meat inspection amendment of June 30, 1906, went into force on October 1 of that year. The remainder of the fiscal year was largely consumed in preparation for active enforcement of the law by the Bureau of Animal Industry. However, the circumstances of one violation were transmitted through the Office to the Department of Justice and the matter was in the hands of the United States attorney of Minnesota at the close of the year.

ATTEMPT TO BRIBE LIVE STOCK AGENT OF THE DEPARTMENT.

Some time in April, 1906, George W. Thompson, live stock agent of the Frisco System, at Vernon, Tex., approached one of the live stock agents of the Bureau of Animal Industry with an offer to pay him $50 if he would issue a certificate of inspection for a consignment of cattle from Texas to Kansas, which said cattle had been previously examined by the inspector and found infested with cattle ticks. The offer was refused and the facts in the case reported to the Bureau of Animal Industry and by it referred to this Office. The matter was investigated thoroughly, additional proof was procured, and steps were about to be taken to refer the case to the Department of Justice, when this Office was advised that the agent of the Bureau had taken the matter up with the United States attorney. The case was tried at Fort Worth, Tex., on December 18, 1906, and resulted in the conviction of Thompson, with a sentence of ten days in jail and $300 fine. It is to be regretted that the court saw fit to impose a nominal penalty for so serious an offense.

GENERAL CORRESPONDENCE WITH THE DEPARTMENT OF JUSTICE.

In addition to the specific correspondence relating to the foregoing cases reported to the Department of Justice during the year, the Solicitor prepared and supervised the Secretary's correspondence with that Department touching other and general matters of interest to the Department. This is required of him by the general order of the Secretary heretofore referred to.

In a letter of October 15, 1906, to the Secretary of Agriculture, the Attorney-General requested that thereafter, when the Department desired the opinion of the Attorney-General, the request be accompanied with the written opinion of the law officer of the Department referring to all legislation or decisions, or any ruling, usage, or practice of the Department affecting the question. In accordance with this request several briefs were prepared during the year giving such opinions and detailing the information requested by the Attorney-General upon questions submitted by the Secretary of Agriculture.

ORDERS AND REGULATIONS.

One of the duties assigned the Solicitor by the general order of the Secretary of June 17, 1905, is to examine and verify the legality, in advance of issue, of all orders and regulations affecting the public, promulgated by the Secretary under statutory authority.

MEAT-INSPECTION LAW.

The meat-inspection amendment was approved by the President on June 30, 1906—the last day of the fiscal year 1906. By its terms it went into force on October 1, 1906, during the fiscal year 1907. The act requires the Secretary of Agriculture to make rules and regulations to carry out the provisions thereof. In accordance with this requirement the Solicitor, in cooperation with the officers of the Bureau of Animal Industry, under which the act is directly administered, immediately undertook the preparation of the necessary regulations. In the preparation of these much time was consumed and great care bestowed, to the end that the purposes of the act should be furthered and, at the same time, the interests of the public advanced. Sixty-five regulations under the act were prepared and published during the year, together with several amendments thereto. These were all published as Order 137 of the Bureau of Animal Industry, and amendments thereto.

PURE-FOOD LAW.

In the administration of the food and drugs act of June 30, 1906, frequent inquiries relative to the interpretation of the act are received by the Department from wholesalers, jobbers, and dealers. As these inquiries involve questions of importance and interest to a large number of business houses and persons, the Department has adopted the course of making each line of inquiry the basis of a "food-inspection decision," and publishing the decision in form for general distribution. Thirty-four of these decisions were rendered during the year, in the preparation of which the Solicitor participated.

By General Order No. 111 of the Secretary, of April 25, 1907, creating the Board of Food and Drug Inspection, the Solicitor is designated as one of the three members. The board is required to consider all questions arising in the enforcement of the food and drugs act of June 30, 1906, upon which the decision of the Secretary is necessary; to consider all correspondence involving interpretations of the law and questions arising thereunder; to hold frequent meetings for the prompt report of findings, and to conduct all hearings based upon alleged violations of the said act.

Much time during the remainder of the fiscal year was devoted to the duties imposed by the above-mentioned order. Frequent hearings were held and considerable work was performed incident to procuring enforcement and proper understanding of the law and the regulations made thereunder.

ASSISTANCE IN LEGAL PROCEEDINGS.

During the year assistance has been rendered the attorneys for the Department of Justice in taking testimony and in preparing briefs in several Department cases. Consultations have also been held with the various United States attorneys in whose districts Department cases were to be tried, assistance rendered with the pleadings, and other duties performed in connection with the trials. Occasion is here taken to say that the cases in which the Department has been interested have received efficient, careful, and vigorous attention from the United States attorneys. The suggestions of the Department have been courteously received, and in many cases accepted.

PATENTS FOR DEPARTMENT EMPLOYEES.

The order of the Secretary of Agriculture of May 8, 1905, provides that—

* * * When any employee of the Department makes any new and useful discovery or invention of any machine, device, or process connected with the work of the Department, through the expenditure of Government time and Government money, you are directed to cause a patent to be applied for on the said discovery or invention, through the law officer of the Department. The patent will be taken out in the name of the inventor, without any expense to him, and will allow to any citizen of the United States the use of the patented article or process without payments of royalty.

All employees of this Department are prohibited from patenting any device or process or discovery connected with the work of the Department except in the manner above described.

It will be seen from this order that the public is the direct beneficiary of all patents taken out by Department employees under its terms.

The Committee on Expenditures in the Department of Agriculture, in their report to the House of Representatives at the last session of Congress, very heartily indorsed the course the Secretary had taken in this connection and commended his action to the other Departments of the Government. Under the terms of the general order of the Secretary of June 17, 1905, requiring the Solicitor to prosecute applications of employees of the Department for patents, five such applications were prepared during the fiscal year. It will be seen from the appended table that three patents were granted, one was disallowed, and one was pending at the close of the year.

Applications for patents prosecuted by the Solicitor, for Department employees, during fiscal year ended June 30, 1907.

Applicant.	Bureau or office.	Invention.	Disposition of application.
A. S. Cushman	Public Roads	Process for extracting potash from feldspathic rocks.	Patent granted Apr. 30, 1907 (No. 851922).
Webber and Boykin	Plant Industry	Process for sizing or coating lint and fuzzy material on cotton and other seed.	Patent disallowed, June, 1907.
Chester E. Gray	Animal Industry	Apparatus for determining water in butter.	Patent granted June 7, 1907 (No. 343281).
Brown and Duvel	Plant Industry	Apparatus for rapid determination of the moisture content of certain grain and other similar substances.	Patent granted Mar. 8, 1907 (No. 848616).
A. S. Cushman	Public Roads	Process for preventing the rusting of iron and steel.	Pending.

COMMITTEE ON PERSONNEL.

In General Order No. 80, October 2, 1905, the Secretary designated the Solicitor as one of the three members of the committee on personnel for the Department. Under this order it is the duty of the committee to consider and investigate all charges of dereliction of duty and actions prejudicial to the interests of the Department by employees thereof, and it has power to summon any employee as a witness.

During the year several such cases were investigated by the committee, and its findings reported to the Secretary.

PUBLIC ADDRESSES.

Before concluding this report it seems proper to mention two addresses delivered by the Solicitor during the year, touching the work of the Department under the meat-inspection law and the cattle quarantine law.

One was delivered at Nashville, Tenn., on December 6, 1906, at the conference of Federal and State representatives to consider plans for eradication of the cattle tick. The address was upon the legal side of the tick-eradication problem and was later published in Bulletin No. 97 of the Bureau of Animal Industry.

The other was delivered on December 18, 1906, before the New York State Breeders' Association, at Syracuse. The subject of the address was "The new meat-inspection law and its bearing upon the production and handling of meats," and was intended as a simple but comprehensive description of the law and its enforcement. It was afterwards published by authority of the Secretary as Circular No. 101 of the Bureau of Animal Industry for general distribution.

STATE OF OFFICE WORK.

The work of the Office is in good shape and up to date. The personnel is efficient, painstaking, and ready to work as many hours per day as are necessary to keep up with the work. During rush periods it has not been unusual for employees of the Office to work until midnight. This has been done cheerfully and willingly. The greatly increased amount of legal work incident to the growth of the Department, and more particularly to the enforcement of the meat-inspection and pure-food laws, will naturally call for an increased number of employees in the Office of the Solicitor.

REPORT ON NEW BUILDING OPERATIONS.

U. S. DEPARTMENT OF AGRICULTURE,
OFFICE OF CHAIRMAN OF BUILDING COMMITTEE,
Washington, D. C., November 4, 1907.

SIR: I have the honor to submit herewith a brief statement covering the work for the past year on the building operations for the Department of Agriculture authorized by the act of Congress approved February 9, 1903.

Respectfully,

B. T. GALLOWAY,
Chairman of Building Committee.

Hon. JAMES WILSON, *Secretary.*

SUPERVISION OF THE WORK.

The building work for the Department of Agriculture has continued in charge of the building committee appointed by the Secretary of Agriculture, which consists of Mr. Gifford Pinchot, Forester of the Department, Dr. A. C. True, Director of the Office of Experiment Stations, and the writer, who, being designated as chairman of the committee, has in such capacity made all necessary recommendations, prepared requests for authorizations, requisitions, etc., and attended to the necessary details connected with the work.

The general construction work has been continued in charge of Maj. John Stephen Sewell, Corps of Engineers, U. S. Army, and the mechanical equipment work in charge of Messrs. R. Barnard Talcott and S. Franklin Gardner, mechanical engineers. Mr. J. G. Palmer, inspector, has been in immediate charge of the construction work under Major Sewell, and has been assisted in the inspection work by Messrs. L. F. Eaton, H. W. Saunders, J. T. Dent, John McGowne, and W. D. Sutherland.

GENERAL CONSTRUCTION WORK.

The general construction work is being executed, as stated in previous reports, by Ambrose B. Stannard, of New York, under contract dated December 14, 1904. At the present time in Laboratory A, or the east section of the building, most of the finish has been installed, and the work remaining to be done consists for the most part of marble bases in corridors, toilet-room marble, and ornamental ironwork for elevator inclosures and stairways. Laboratory B, or the west section of the building, is not as near completion as the east section. The plastering in this section, however, is approximately 85 per cent completed, and the interior finish is now being started.

The contract time for the completion of the building expires November 14, 1907, and it now appears that the contractor is two or three months behind with his work. This delay will cause much inconvenience to the Department, although the liquidated damages to the Department during this period are chargeable to the contractor.

MECHANICAL EQUIPMENT WORK.

The contract for the electric wiring and conduit systems was awarded to the Watson-Flagg Engineering Co., of New York, under date of January 20, 1906. This contract covers the entire conduit and wiring systems for the electric light and power circuits, an intercommunicating telephone system, and an electric clock system. This work has been satisfactorily installed as far as the condition of the buildings will permit.

The contract for the elevator installation was awarded to the Otis Elevator Company, of New York, under date of January 22, 1906. This contract covers the installation, complete in every detail, of six electric elevators, three in each section of the building, which have been installed as fast as the condition of the building would permit, and the work is now practically completed.

The heating and ventilating and special piping contract was awarded to Charles H. Sanborn, of Boston, Mass., under date of February 1, 1906. This contract covers the complete heating, ventilating, and special piping systems, which are now entirely installed except for a few details which can not be executed until the general construction work has progressed farther.

The contract for the construction of the power house was awarded to Ambrose B. Stannard, of New York, under date of April 6, 1907. This contract covers the construction of a temporary one-story brick building, approximately 110 feet long by 56 feet wide, designed to house appliances of the power plant equipment, together with concrete tunnels connecting the power house with the subbasements of sections A and B of the new building and the construction of an 84-foot stack. This contract is practically completed.

The contract for the power-plant equipment work was awarded to S. Faith & Co., of Philadelphia, Pa., under date of April 6, 1907. This work includes the boiler plant, pumps, heaters, tanks, all pipes connecting the various parts of the apparatus, and piping in the tunnels from the power house to the connections with the special piping and heating systems in sections A and B of the new building. Considerable delay has been experienced by this contractor in securing the shipment of approved appliances. Most of the appliances are now at the building, however, and the work is rapidly nearing completion. The entire plant will be ready for use by the time the general construction work is completed.

The contract for lighting fixtures for the building was awarded to the Elmer H. Catlin Company, Washington, D. C., under date of June 6, 1907. This contract covers the furnishing and installing of all pendent and bracket lighting fixtures for the entire building. Drawings and samples of these fixtures have been approved and the fixtures are being delivered at the building, and will be placed as soon as desired.

FINANCIAL STATEMENT.

APPROPRIATIONS.

March 3, 1903	$250,000
March 3, 1905	700,000
June 30, 1906	300,000
March 4, 1907	250,000
	1,500,000

Expenditures and liabilities.

Contracts, salaries, etc.	Nature of work.	Expenditures.	Liabilities.	Total expenditures and liabilities.
Contracts:				
R. J. Beall Construction Co.	Sewer	$6,898.26		$6,898.26
J. T. Walker	Superintendent's quarters	1,377.85		1,377.85
Ambrose B. Stannard	New building	1,000,925.64	$167,810.35	1,168,735.99
Do	Power house	19,843.66	4,952.34	24,796.00
Chas. H. Sanborn	Heating and ventilating	49,872.61	24,565.39	74,438.00
Watson-Flagg Engineering Co.	Electrical work	15,376.99	4,880.01	20,257.00
S. Faith & Co	Power plant	28,471.50	31,561.46	60,032.96
Otis Elevator Co	Elevators	12,637.50	12,637.50	25,275.00
Elmer H. Catlin Co	Lighting fixtures		9,480.00	9,480.00
Rankin, Kellogg & Crane	Architects' services	53,466.68	1,760.32	55,227.00
Salaries: Engineers, inspectors, etc.		32,142.25	4,893.82	37,036.07
Miscellaneous: Authorizations, requisitions, travel, etc.		10,857.75	1,035.00	11,892.75
Total		1,231,870.69	263,576.19	1,495,446.88

Total appropriations	$1,500,000.00
Total expenditures and liabilities	1,495,446.88
Total available balance	4,553.12

INDEX.

Page.

Accounts and Disbursements Division, growth, 1881–1907 754
publications, 1907 364
report of Chief 507–540
work, 1907, review by Secretary 103–105
Department, growth in importance and in work of keeping 507–508
falsification, case 770
fiscal year 1905, final closing 512–513
National forests, statement of refunds to States, work of Office, etc. . 355–356
Acidity, cream, effect on keeping quality of butter 244
Actinidia, introduction, Chico, Cal., garden 338
Adams fund, work 116, 651–655
Adulteration seed, decrease 57, 329
Aeroplanes, ascensions, meteorological observations 23, 143–146
Agave tequilana investigations 327
Agents, statistical, special field 113, 635
State 113, 636, 642
Agricultural census, quinquennial, recommendation 642
education, extension work, recommendations 120–121, 658–659
colleges and schools, work of Experiment Stations Office 656–658
education, foreign countries, methods of extension 121, 663
progress, information, publications 656
Experiment Stations, relations of Plant Industry Bureau 261
explorations, 1907 330–331
production, United States, review 9–23
productions, foreign countries, statistics 114, 639
school farms, assistance of Soils Bureau 438
statistics, growth and development 629–631
Agriculture, Commissioners, length of service 757
Department, appointments and changes, summary 741–743
cases in Court of Claims 768–769
cooperative lecture tour, object, work 728
deaths, names of persons 742
employees, increase since 1867 138
establishment 749–758
expenditures, investigation 508
growth, 1862–1907 749
new buildings 509
origin, historical data 745–749
extension work 662
research, lack of workers 117, 653
Secretary, Office, growth, 1881–1907 750
report, 1907 9–140
teaching in colleges and schools, growth 119, 656
Agronomic investigations, Arlington Experimental Farm 296
Agrostemma githago, poisoning chickens 223, 307
Agrostology publications, 1907 601
Air, upper, work at Mt. Weather Observatory 23–24, 143–146
Alabama cooperative soil survey work 425
demonstration farms 340
soil surveys, 1907 414
Alaska experiment stations, work 121–122, 671, 673–677
game preservation 103
protection 495

Page.
Alcohol, denatured, investigations Plant Industry Bureau 262
determination in medicinal agents 393
Alfalfa, adaptation in cotton States, study 429
Arabian, large yield 48, 324
cultivation, extension 12, 47
extension, inoculation experiments 324
Grimm, identity with sand lucern 48
importance and value 12
Peruvian, life history, study 45, 280
propagation by vegetative methods, experiments 324
seed production, encouragement 47, 324
Siberian, introduction, value 324
soil requirements, study 429
Alfalfas, new, introduction 43, 280
Algae pollution, work in Canal Zone 55, 287
Alkali, reclamation by flooding and underdrainage 430
resistant plant breeding work 272–274
Amarillo experimental farm, Texas, cereal work 314
Animal diseases, scientific investigations 212–226
husbandry work, Bureau Animal Industry 35–36, 236–242
Industry Bureau, growth, 1885–1907 750–751
1907, employees and expenditures 191–192
publications, 1907 ..... 255, 565–570
report of Chief, 1907 191–255
work, 1907, review by Secretary 27–40
nutrition experiments with respiration calorimeter 36, 240
physiological investigations, laboratory work 397
products, exports, value, 1907 21
quarantine regulations 206–212, 372, 771–772
Animals and animal products, imports, value, 1907 22
export, inspection 29, 207
farm, sold and slaughtered, value, 1907 20
geographic distribution 490
grazing, National forests, number and value, 1907 ..... 64, 372
import, inspection, and quarantine 31, 208–210
live, exports, value, 1907 21
number inspected before and after slaughter 27, 200
wild, autopsies, diseases causing death 221
Anona spp., grafting cherimoyer, experiments 337
Ant, fire, enemy to cotton-boll weevil, value 448
Texas, enemy of boll weevil 87
Anthracnoses, fruit, study 267
Anthrax symptomatic. *See* Blackleg.
Apiaries, inspectors, meetings, proposed work, etc 472–473
Apiculture, investigations 472–475
Appalachian Mountains, section, soil utilization for fruit growing 428
Apple, Arkansas planting, note 414
diseases, control 41, 266
spraying demonstrations 266
Apples, adaptability, studies 293
marketing methods 55, 289, 294
Appointment Clerk, report 741–758
Appropriation, estimate for 1909 104
for 1907, amount, disbursement 105
Forest Service 346–347
Plant Industry Bureau, 1907 257
Statistics Bureau, 1907 636
Appropriations, Department, discussion 506–509
estimates, tabular statement 514–516
fiscal year 1907, table 510
increase since 1889 108
statistical work, 1893–1907 631
1889 to 1907, recapitulation 540
1889 to 1907, tabular statement 519–540
Arabian alfalfa, large yield 48, 324
Arboriculture, dry-land 280
Areas, soils surveyed and mapped, 1907, cost per square mile 411–413

Page.
Arid lands, plants suitable 273
soil utilization study 427
region, drainage, remarks 705
Arizona date gardens 45, 278
Yuma crop experiments 322
Arkansas demonstration farms 340
drainage work, review 710
soil surveys, 1907 414
Arlington Farm, fertilizer tests, Soils Bureau 438
work, 1907 ..... 58, 295–298
ARNOLD, JOS. A., report as Acting Editor 541–627
Ash constituents of food, study 693, 698
Asparagus, rust-resistant, breeding 52, 277
Assaying drug products, methods 393
Autopsies, wild animals, diseases causing death 221
Avian tuberculosis, study 218–219

Bacilli tubercle, butter 216, 233
virulence, mode of transmission 216, 233
Bacillus enteritides, finding in fowls 224
necrophorus, cause of necrotic dermatitis in sheep 222
Bacteria, nodule-forming, distribution 54, 286
relation to fertility 54, 286
Bacterial diseases, use for destruction of mammal pests 487
Bacteriological-chemical investigations, Washington laboratory 398
Bacteriology, soil, work 54, 286
Bacterium avisepticum, cause of fowl cholera 224
Balance unexpended, Department of Agriculture, 1905 106
Balances, unexpended, 1839 to 1907, recapitulation 540
tabular statement 519–540
Bamboo culture, Chico, Cal., garden 338
introductions 44, 333
Banana culture, extension, Hawaii 678
Barley, malts, investigation 397
production and value, 1907 16
Barleys, malting, investigations 332
BARNETT, CLARIBEL R., report as Librarian 645–648
Barograph, mercurial, completion and testing 170
Bean, horse, value on arid lands 273
Beaver farming, remarks 501
Bee culture 94
investigations 472–475
proposed work 481
diseases, investigations by Entomology Bureau 472–475
names, decisions 472
proposed work 481
study 94
keeping, Hawaiian Islands, studies by D. L. Van Dine 475
Beef production in South 36, 241
Beet seed. *See* Seed, beet.
sugar, insect enemies, investigations 465–466
investigations 56, 308–312
Beets, breeding, high grade 308–310
seed, siloing 310
selection for breeding 310
sugar, area, extension 311
cultural methods 311
diseases 311
fertilizers, experiments 311
value to agriculture 11
BENNETT, J. B., report as Appointment Clerk 741–758
Bermuda onion, successful culture, Texas, note 421
onions, investigations, seed production 300
Bibliographical work, Experiment Stations Office 669
Big Horn Basin, irrigation 710
Bighead sheep, study 306

Page.
Biochemic division, Animal Industry Bureau, work, 1907 226–230
Biological Survey Bureau, growth, 1887–1907 753
work, 1907, review by Secretary 96–103
publications, 1907 ..... 499, 570–571
recommendations 505
report of Chief 485–505
routine work 498
Bird migration, study 492
protection, cooperative work 103
refuges, proposed work 504
reservations, discussion 494–495
maintenance 102
reserves, trespass 768
Birds, boll-weevil eating 97
economic value 96
examination of stomachs, importance and results 488–489
food, study 500
foreign, entry, regulations 101
geographic distribution 490
identification, note 492
importation, supervision and control 493
insectivorous, means of increase, note 490
relation to fruit raising 97
scale-eating, investigations 97, 490
study proposed 502
useful, decrease in United States 486
water, suggestion for preservation 501
Bison. *See* Buffalo.
Black Hills National Forest, insect investigations, work of Entomology Bureau 457
Blackhead, turkey disease, study 235
Blackleg vaccine, distribution, results 34, 225–226
Black-rot, grape, control, study 267
Blight, peach, control, California 42, 266
pear, eradication, study 41, 265
Board of Trade, National, reference to Statistics Bureau 643
Bobwhite disease, study, Animal Industry Bureau 33, 221
Boll weevil, control, destruction of cotton stalks, experiments 445
field experimentation 88, 445–446
usefulness of birds 97
work of Entomology Bureau 87–89, 444–448
destruction by birds 489
enemies, parasite and other 87, 447–448, 489
investigations, proposed work 480
region, farmers, help by Bureau Plant Industry 58, 339–341
Bollworm, cotton, work by Entomology Bureau 449
Bordeaux mixture, control of peach blight 42, 266
spraying tropical fruits 336
Borer, peach. *See* Peach borer.
Botany publications, 1907 601
Breeding beets, high-grade 308–310
cotton, wilt-resistant varieties 264
investigations, general 239
live stock, work 35–36, 236–238
plant, Alaska 675
wilt-resistant plants 264
Breton Island, bird reservation, remarks 495
Brome-grass, success on Great Plains 325
Brown-rot, peach and plum investigations 267
Brown-tail moth. *See* Moth, brown-tail.
Brush, National Forests, disposal 366–367
Buckwheat, production and value 18
Buffalo pasture, establishment 354
Wichita National Forest 71
Building, new Department, mechanical equipment work, awarding of contracts 140, 778
report 777–779

Page.
Buildings, dairy, plans, and blueprints sent out by Department..... 254
Mount Weather, construction, cost..... 179–181
new and rented..... 509, 514
rental, District of Columbia, 1907..... 105
rented, Weather Bureau..... 178–179
Bulbs, distribution..... 334
work, transference to Pacific coast..... 300
Bureau, Animal Industry; Chemistry; Entomology, etc. *See* Animal Industry; Chemistry; Entomology, etc.
Butter analysis, Chemistry Bureau..... 389
fat, prices paid by creameries, different localities..... 252, 253
fishy flavor, investigations..... 244
inspection..... 39, 251, 253
investigations, flavor, sweet-cream churning..... 38, 244–246
keeping quality, relation to acidity of cream..... 244
moisture determination, method, invention..... 38, 245
quotations, value to farmers, desirability..... 254
renovated. *See* Renovated.
tubercle bacilli..... 216, 233

Cacao culture, Porto Rico..... 686
fungus disease investigations, Porto Rico..... 686
seedlings planting, Hawaii Experiment Station..... 678
Cage-bird traffic, remarks..... 98, 496
California, biological survey work, notes..... 492
Chico garden, resistant grape stocks, study..... 293, 295
plant introduction garden, work, 1907..... 338–339
date gardens..... 45, 278
drainage work, review..... 711
flood, 1907, service of Weather Bureau..... 160
grape soils, study..... 430
irrigation work..... 706–707
nutrition investigations..... 690
oranges, decay in shipping, study..... 288–291
peach-blight control..... 42, 266
soil surveys, 1907..... 415
vineyards, cooperative, work, 1907..... 292
Calorimeter respiration, use in animal nutrition experiments..... 36, 240
nutrition investigations..... 124, 690, 698
Calosoma sycophanta, enemy to gipsy moth, introduction..... 454
Calves, tuberculous infection by milk from diseased cow..... 234
Camphor industry, establishment..... 57, 304, 305
Canada, game laws..... 496
Canadian animal quarantine regulations..... 207
Canal zone, reservoir treatment for algæ pollution..... 55, 287
Canals, lining to prevent loss of water..... 701
Canaries, pseudotuberculosis, study..... 218
Canned goods, investigations..... 387
meat products, changes, investigations..... 227
Canning vegetables, household methods, study..... 692
Capri figs, introduction and breeding..... 281
Caramel in vinegar, fuller's earth test..... 385
Carbolic acid and liquor cresolis compositus, relative value..... 229
Cassava, alcohol study..... 394
Catalogue, card, library, work..... 645
Cattle breeding, Alaska..... 677
condemned, indemnity to owners, recommendation..... 196
feed investigation, Chemistry Bureau..... 390
imported, inspection, numbers..... 209–210
mange, eradication, inspections, dippings..... 30, 206
raising, Alaska..... 675
tick. *See* Tick, cattle.
tuberculin tests..... 32, 216–218, 235
tuberculous, offspring, rearing on pure milk..... 217
vaccination for blackleg, results..... 225
Census Bureau, cooperation with Forest Service, in census standing timber. 65
quinquennial, agricultural and live stock, recommendation..... 642
Central American cottons, weevil resistant..... 284

Page.
Cercospora beticola, control by spraying 312
Cereals, growing and maturing, Alaska 676
production and value, 1907 18
Cheese analysis, Chemistry Bureau 389
cheddar, investigation 246
investigations, Animal Industry Bureau 38, 246–247
nutritive value, investigations 124, 688, 693, 698
soft, investigations 246
statistics, collection 254
Swiss, investigations 247
Chemalali olive introduction 281
Chemical laboratory work, Soils Bureau 434
Chemist, report, 1907 381–409
Chemistry Bureau, clerical work, summary 400
cooperation with Plant Industry Bureau 385, 390, 392, 398
growth, 1881–1907 752
proposed work, various divisions 401–409
publications, 1907 ..... 400–401, 571–573
report of Chief, 1907 381–409
work, 1907, review by Secretary 71–74
Cherimoyer grafting experiments 337
Cheyenne Irrigation Extension Farm, work 709
Chicago, request for truck-soils survey, proposed work 440
Chicken cholera, study 224
tuberculosis, study 218
Chickens, poisoning with corn cockle 223, 307
Chico plant introduction garden work, 1907 338–339
Chlorin, use in disinfecting sewage 287
Chlorotic diseases, fruit trees 266
Chocolates, analysis, studies 385
Cholera, chicken, study 224
hog, investigations and experiments 32–33, 227–228
prevention by selective breeding, experiments 228
vaccination with immune serum 33, 227–228
pigeon, study 224
Citrange, breeding and use 282
value as substitute for lemon 282
Citrus fruits, hardy, life history, studies 46, 282
trees, fumigation with hydrocyanic acid gas, proposed investigations 479–480
new varieties, distribution 334
windbreaks, Porto Rico 685
Civil Service Commission, positions filled in Agricultural Department 757–758
Claims, invalid, contests, National Forests 346
Clark, C. C., report as Acting Chief of Bureau of Statistics 629–644
Climatological publications, Weather Bureau, 1907 162–165
Service, Weather Bureau, 1907 160–165
Climatology, marine, tabulation, Weather Bureau 168
United States, bulletin by Alfred J. Henry, note 165
Clover, Orel, experiments, seed production 279
Clovers, life history, investigations 279
new, introduction 43, 279
Coal-tar dips for sheep 34, 229, 232
Coastal Plains, soils study, proposed work 440
Cockle, corn, poisoning chickens 223, 307
Cocoanut bud rot, study, control 263
Cocoas, analysis, studies 385
See also Cacao.
Cocoons purchased by Department 477
Codling moth. *See* Moth, codling.
Cod-liver oil examination, drug laboratory, Chemistry Bureau 392
Coffee experiments, Porto Rico 684
imports, value, 1907 21
Cold storage, effect on food, study, Chemistry Bureau 385
Coli bacillus, cause of quail disease 221
Colleges, agricultural, courses for scientists, necessity 117, 653
growth of movement 118–119, 656–658
with Experiment Stations, Association, educational work 657

Page.
Colletotrichum glæosporioides, study, Miami subtropical laboratory..... 336
Colorado, biological survey work..... 492
drainage work, review..... 711
irrigation experiments..... 707
Commissioners, Agriculture, length of service..... 757
Committee on Department Methods, reference to Statistics Bureau..... 643
Computing section, Forest Service, work..... 374
Congressional distribution, Farmers' Bulletins..... 106, 543
seed..... 58, 534
publications..... 562–564
Connecticut nutrition investigations, bulletins..... 690
Storrs Experiment Station, cooperation in cheese investigations. 38, 246
tobacco investigations..... 270
Contagious diseases, animal, control, inspection, quarantine..... 30, 203–206
violation of law for suppression, cases..... 770
Contracts, building, awarding..... 778
leases, bonds, etc., work of Solicitor..... 761
supplies, examination, Chemistry Bureau..... 74, 393
Cooperation, irrigation, California contribution..... 706
nutrition investigations..... 123–125, 689–694
soils work, Alabama and other States..... 425
Copper Center Station, Alaska, work, 1907..... 676
sulphate, use in algæ eradication..... 287
disinfecting sewage..... 287
Corn breeding, seed improvement..... 49, 274–276
Central American varieties, acclimatization..... 285
early varieties, on unirrigated lands, in rotation with wheat..... 275
imported strains..... 276
investigations and breeding..... 274–276
production and value, 1907..... 14
region stations, Weather Bureau, 1907..... 161
seed selection, results..... 274
preservation methods..... 276
soils, study, Soils Bureau..... 429
sweet, for canning and table use, improvement..... 275
varieties, adaptation..... 275
Correspondents, Weather Bureau, by States..... 163
Corrosion of iron, investigation by Roads Office..... 136
Cotton, arid lands..... 273
Cotton boll weevil. *See* Boll weevil, cotton.
culture farms, boll-weevil section..... 339–341
types for weevil resistance, description..... 284
diseases, control, study..... 263
drought resistance, studies..... 285
drought-resistant varieties..... 284
early maturing varieties..... 270
stand, insuring..... 50
exports, value, 1907..... 21
improvement work..... 270
machinery, improvement..... 270
production and value, 1907..... 15
table prepared by Statistics Bureau..... 639
world, 1907..... 15
region stations, Weather Bureau, 1907..... 161
Weather Bulletin, scope..... 162
reports, special..... 110, 632
seed distribution..... 334
products, feeding to hogs..... 240
selection for breeding..... 270
soils, study by Soils Bureau..... 428
transportation, cost..... 16
Cottons, classification, study..... 328
Egyptian, acclimatization..... 51, 273
weevil-resistant, breeding..... 50, 284
Cowpea culture, improvement..... 48, 325
Cowpeas, nutritive value..... 698
wilt-resistant, breeding..... 264

Page.
Coyotes, fence, proposed experiments 500
prevention of sheep killing, by fencing 486
Cranberry diseases, control, study 267
Cream acidity, effect on keeping quality of butter 244
sweet, churning experiments 38, 245
Creameries, classes, conditions 251–254
records keeping, importance and value 250
tubercle bacilli 215
Creamery investigations, Bureau Animal Industry 39, 249–251
Creams, ice, examination, Chemistry Bureau 389, 399
Creosote, coal-tar, dips for sheep 34, 229, 232
Creosotes, use in preserving marine timbers, studies, etc 379
Cresol dips for sheep 34, 229
Cresolis compositus liquor and carbolic acid, relative value 229
Crop production, average per acre, comparison Europe with United States .. 663–665
Reporting Board, personnel, duties 634
methods 109, 631–632
reports, methods of issuing 112, 635
preparation 634
revision 638
scope, transmission, and preparation 110–112, 632–635
transmission, special precautions 634
rotation experiments, Soils Bureau at Arlington Experimental Farm ... 295
removal of harmful substances in soil 77, 433, 434
statistics, growth and development 108–109, 629–631
yield per acre, relation to agricultural education extension 665
zones, remarks 491–492
Cropping systems for stock farms 60
Crops, chief production, United States, 1907 14–19
damage by deer, note 497
diversification, encouragement 60
field, alkali-resistant, work 272
drought-resistant, breeding work 273
new, introduction 13, 43–44, 332
production, 1907, summary 19
Crown-gall diseases, study 42, 268
study 263
Cuban census, note on taking, Department statistician 629
Curculio, plum, investigations 460
Cyamopsis tetragonoloba, introduction and experimental planting 326
Cysts, intestinal, gas, hogs, study 222

Dairy buildings plans, blueprints 40, 254
cattle, condemned, indemnity to owners, recommendation 196
division, Animal Industry Bureau, work, 1907 242–255
farms, water supply, examination 229
industry work, Animal Industry Bureau 37–40, 242–255
inspection by Department 32, 39, 248
laboratory, Chemistry Bureau, work, 1907 389
products, analysis methods, study 389
exports, value, 1907 21
imports, value, 1907 22
investigations 244–248
value, 1907 20
comparison with corn and all cereals 20
records and tests 37, 40, 244
work extension, Jamestown Exposition 40, 249
Dairying opportunities, Mississippi prairie lands, note 417
Southern, improvement 37, 242–243
States, assistance of Department 243
work, Alaska 675
Dairymen, agreement in regard to treatment of tuberculous cattle 217
Damping-off diseases, forest nurseries, study 268
Date gardens, California, Arizona, and Texas 45, 278
cooperative, establishment 278
palm culture, conditions, 1907 ..... 45, 278

Page.
Dates, injurious effects of moisture in air produced by evaporation..... 153
Deer, distribution, etc..... 497
Deglet Noor date ripening, California..... 279
Delaware, swamp-land study..... 712
Demonstration farm, irrigation..... 708
farms, boll-weevil section..... 339–341
Dendrology, proposed work..... 350
section, duties, purposes, etc..... 345–350
special studies..... 349
Departmental service, extracts from laws..... 744–745
Dermatitis, necrotic, sheep, study..... 222
Dietary study, aged women..... 694
mountain families, Tennessee..... 694
Digestibility, food, investigations, importance..... 687–689
Dikes, damage by rodents..... 502
Dipping outfit for cattle-tick eradication..... 205
Dips, sheep, official use..... 34, 229
stock, experiments..... 229
Directory, card, teachers and investigators..... 657
Disbursements and Accounts Division, growth, 1881–1907..... 754
work, 1907, review by Secretary..... 103–105
fiscal year 1907..... 510
1839 to 1907, recapitulation..... 540
tabular statement..... 519–540
See also Accounts.
Disbursing agents, special..... 509
Disease, insects carrying to man and animals..... 96
Disease-resistant potatoes, breeding..... 264
Diseases, animal, causes for condemnation, meat..... 201
contagious, control, inspection, quarantine..... 30, 203–206
scientific investigations..... 212–226
apple, control..... 41, 266
bee, study..... 94
cotton, control, study..... 263
crown gall, study..... 42, 268
nematode, study, Miami subtropical laboratory..... 335
parasitic, work, Bureau Animal Industry..... 34, 230–232
plant, study, summary..... 265
tomato, study, Miami subtropical laboratory..... 336
tropical fruits, study, Miami subtropical laboratory..... 336
District of Columbia, food inspection, Chemistry Bureau..... 389, 399
milk supply investigations..... 32, 39, 217, 218, 248
Diversification farms, encouragement..... 60
Document section, Publications Division, work, 1907..... 548–550
Documents, distribution, records..... 550
Dodder injury, investigation..... 57, 330
Dourine eradication, inspections..... 30, 210
Drafting Section, Forest Service, work..... 374
Drain tile use, investigations..... 130, 712
Drainage and irrigation investigations, reorganization..... 126
assistance to farmers by Department..... 129
information, demands..... 129
investigations, 1907..... 127–129, 705–714
general statement..... 705
practical studies..... 130
problems, three classes..... 705
publications, 1907..... 714–715
use as remedy for soil erosion..... 85
work, 1907, review..... 710–714
Dromedary disease, carried by gadfly..... 92
Drought resistance, cotton, studies..... 285
Drought-resistant plants, breeding work..... 272–274
Drug crops growing, industry..... 57, 303–305
garden work, Arlington Experimental Farm..... 296
inspection laboratories..... 384
laboratory, Chemistry Bureau, work, 1907..... 391–393
law, regulations, work, officers..... 71–73, 381, 383–385

Page.
Drug plant investigations 303–305
testing, cooperative work, 1907 303
products, assaying, methods 393
Drugs, samples, examination 73, 392
sent through mails, examination 393
Dry farming, Great Basin, investigations 323
Dry-land agriculture, investigations and cooperative stations 318–319
physical investigations 320
arboriculture studies 280
rice varieties, experiment 683
Ducks, wild, food study 489
protection, need of legislation 98
suggestion for preservation 501
Durum wheat, area, 1907 10
exports, 1907 ..... 10, 53, 313
extension 53, 313
introduction, uses, cost, and value 10
Dust, roads, preventives, investigations, work of Roads Office 732–733

Earthquake phenomena, study, importance 152
Editor, report, 1907 541–627
Editorial work, Publications Division 547–548
Education, agricultural, foreign countries, methods of extension 121, 663
progress, information, publications 656
serial publication, recommendation 659
work of Department 119, 655–658
teaching meteorology in schools and colleges 175
Educational Board, General, New York, support of demonstration farms 340
tours, Soils Bureau 80, 431
Egg production, increase, breeding experiments 239
Eggs, game birds, imported for stocking covers 101
prices, 1899, 1903–1907 20
Egyptian cottons, acclimatization 51, 273
Electro-culture experiments 282
investigations 321
Elk, danger of extermination, need of protection 102
Emmer experiments 313
introduction, experiments 54, 313
Employees, Agriculture Department, changes, etc 741–743
D. C., by States 756
different branches 755–756
Animal Industry Bureau 1906, 1907 191
Plant Industry Bureau, changes 262
Weather Bureau, examination for promotion 177
members, changes, salaries, etc, 1907 182–187
Enarmonia prunivora, injury to apples, investigations 461
Engineer students, instruction, Roads Office 726, 737–738
Engineering, highway, instruction 135
work of Roads Office 726
improvement of National forests, appropriations, work, etc 355
Entomological investigations, increase of appropriations, necessity 482–483
Entomologist, report 443–483
Entomology Bureau, cooperation with Plant Industry Bureau, fruit-disease control 41, 295
growth, 1881–1907 753
miscellaneous investigations 477–478
proposed work 478–481
publications, 1907 573–579
report of Chief 443–483
work of year, classification 443–444
1907, review by Secretary 87–96
Erosion, soil, study 83–86, 440
Estimates, appropriation, tabular statement 514–516
Eucalyptus planting, studies 431
Eupatorium ageratoides, connection with milk-sickness, investigations 306
European countries, crop production per acre, comparison with United States. 663–665

Page.
Eutettix tenella, injury to sugar beets, investigations 465–466
Evaporation recording instruments, improvement 171
studies, demands upon Weather Bureau 25, 156–157
Examinations for promotion, Weather Bureau employees 177
Expenditures, Animal Industry Bureau, 1907 192
Department, discussion 508–509
investigation and its results 508
printing, by various bureaus, etc., 1907 ..... 557, 560
economy 541
Statistics Bureau, 1907 636
Experiment Station, Animal Industry Bureau, work, 1908 233–235
literature, card index 669
Work, bulletins, 1907 668
Stations, insular, work, 1907 ..... 121–123, 670–686
Office, assistance to colleges and schools 657
development of work 649–651
growth, 1889–1907 755
nutrition work, Washington office 689
publications 579–590, 665–670
relations with Experiment Stations 116–118, 651–655
work, 1907, review by Secretary 116–132
report of Director, 1907 649–715
relations of Experiment Stations Office 651–655
Experimental farm, cotton-boll weevil work, Entomology Bureau 444
need of Animal Industry Bureau 198
Explorations, agricultural, 1907 330–331
Export animals, inspection 29, 207
meats and products, inspection certificates 202
Exports, farm products, 1907 21
forest products, value, 1907 22
Exposition, Jamestown, Plant Industry Bureau exhibit 261
Expositions, loans from Forest Service 349
Extensions, forests, necessity, difficulties 65
western agricultural, work, 1907 321–323
Extracts, flavoring, study, Chemistry Bureau 385

Fairbanks Station, Alaska, work, 1907 676
Farm, animals slaughtered, exemption from meat inspection 199
irrigation, Wyoming 709, 710
land acreage, United States 74, 411
management investigations, 1907 60
products, exports and imports, 1907 21–22
wealth production, 1899–1907 19–20
Farmers, boll-weevil region, help by Bureau Plant Industry 58, 339–341
Bulletins, Bureaus, etc., contributing 559
cost of printing 543, 544, 558
number and distribution 106, 543, 558–559, 623–625
cooperative work, Soils Bureau 438–439
Institutes, work, 1907 ..... 120, 660–665
workers, American Association 662
Farms, demonstration, boll-weevil section 339–341
establishment, need, provisions 702–703
irrigation 708, 709, 710
experimental, cotton-boll weevil work, Entomology Bureau 444
in dry regions 703–704
successful methods, studies 60
Fat, butter, prices paid by creameries, different localities 252, 253
Feed, stock, prickly pear, value 61
Feeding cotton-seed products to hogs 240
investigations 239–241
poultry experiments 241
steers for beef, experiments 36, 240
Fees, grazing, receipts, etc 371
Feldspathic rocks, potash extraction, investigation, Roads Office 136
Fence posts, treatment, preservative 70
use in protection of sheep from coyotes 486

Page.
Fertilizer, soil requirements, study 437
tests, Arlington Farm, Soils Bureau 438
Fertilizers, effect on toxic bodies in soil 432–434
use by farmers, value, waste 75, 437
Fertility, soil, relation of bacteria 54, 286
study 75–77, 432–434
Fibers, vegetable, imports, 1907 21
Field mice, control, study 99–100, 500
Fig breeding studies, results 281
culture, Chico, Cal., garden 338
Finches, strawberry, importation, enforcement of law 493
Fires, forest, areas burned, damage, etc 354
protective measures, value 354
Fish for National forests, payment, authorization 346
Flax-fiber industry, investigations 326
Flaxseed, production and value, 1907 17
Flood and River service, Weather Bureau work, 1907 158–160
service, Weather Bureau, extension, recommendation 25, 159
value of warnings by Weather Bureau 160
Flora, forest, of the United States, treatise 349
Florida, citrus fruits, damage by white fly, investigations 466–468
Everglades, drainage survey 131, 711
game protection, history 496
Miami, subtropical laboratory and garden, work, 1907 335–338
oranges, work handling and shipping 291
soil surveys, 1907 415
tobacco work 271
Flour, nutritive value and digestibility 692
Fly, Hessian. *See* Hessian fly.
Fly, white. *See* White fly.
Foliage injury by spraying, prevention 41, 266
Food and drug inspectors, appointment, training 383
regulations, preparation 381
cattle, investigation, Chemistry Bureau 390
imported, inspection 384
samples, analysis 386–387
inspection decisions, work 774
laboratories 384
Washington, D. C., Chemistry Bureau summary 399
investigations by special agents 387
law, regulations, work and officers 71–73, 381, 382, 383–385
nutritive value, investigations 686–700
Food-research work 73, 385, 388, 399
Foods division, Chemistry Bureau, work, 1907 385–388
Foot-and-mouth disease, study 220
Forage crops, investigations 47–49, 323–326, 373, 429
Forecast Service, work, 1907 ..... 24, 150
Forecasts and warnings, distribution 163–165
Foreign countries, agricultural extension 121, 663
productions 114, 639
Forest diseases, cooperative work, Bureau Plant Industry and Forest Service 42, 260
distribution records, work, results 349
extension, necessity, difficulties, etc 65, 359
insect investigations, work 365
management, cooperation with State experiment stations 369
nurseries, damping off diseases, study 268
pathology 267–269
planting, cooperation of Department with private owners 363
national forests, work 360–362
stations, seed beds, stock, etc 360, 362
work 359–362
products, exports and imports, 1907 22
investigations, work of Forest Service 373–380
proposed work of Forest Service 377
special studies 376–377
statistics, transfer of work to Census Bureau 376
study 70

Page.
Forest Service, appropriation 346–347
fiscal affairs 517
growth, 1880–1907 751–752
improvements, 1907, summary 343–345
new provisions in agricultural appropriation act, 1907 346
organization scheme, chart 344
osier willow plantation at Arlington Experimental Farm 295
publications, 1907 590–595
timber sales to be deposited in Treasury 104
work, 1907, review by Secretary 61–71
Forester, report for 1907 343–380
increase of salary 346
Forestry planting, Porto Rico 685
problems, study 64–65
Forests, administration, work of supervisors and rangers 66
cut over, soils, use 426
Europe, management, outlay and returns 62
insects, injurious 95
National, districts and areas 350, 351–353
engineering work, appropriations, etc 355
examinations of lands, proposed work 359
improvement, cost, requirements, etc 63, 67
land claims 346, 358
proposed management, 1908 354
range conditions 64, 68
renewal, broadcast sowing, experiments 362
returns, cost, administration 61
rights of way, permits, etc 358, 368
supervision, officers 354
wolves, extermination problem 486–487
Fowl cholera. *See* Chicken; Pigeon.
tuberculosis study 218–219
Fox farming, remarks 502
France, forests, outlay and returns 62
road-improvement system 138
Freight rates, ocean, study, Statistics Bureau 640
Fruit composition, study, Chemistry Bureau 385
cooking experiments, nutrition investigations 691
district investigations 293, 295
growing, Alaska 675
industry, Porto Rico 685
investigations 55, 287
marketing studies 289
raising, relation of birds 97
shipment investigations, Hawaii Experiment Station 680
storage investigations 291, 294
trees, deciduous, insects injurious, investigations 94, 458–462
transportation, studies 289, 294
varieties, distribution 288
Fruits, citrus, injuries by white fly, investigations 466–468
exports, value, 1907 21
imports, value, 1907 21
nomenclature, identification 288
nutritive value, investigations 123, 690, 695, 697
tropical and oriental, Chico, Cal., garden 338
tropical, diseases, study, Miami subtropical laboratory 336
wild, as grafting stocks, studies 46
Fumigation, hydrocyanic-gas, proposed work 479
remedy for white fly, experiments, results 467
Fungicides, examinations, Chemistry Bureau 390
Fungus, gumming, peach, study 266
Fur-bearing animals, protection, remarks 501–502

Gadfly, Algeria, wasp enemy sent from southern States 92
GALLOWAY, B. T., report as Chief of Bureau of Plant Industry 257–341
on new building operations 777–779
Galls, root and crown, study 263

Page.
Game, Alaska, protection 495
birds, egg importations, remarks 493–494
commissioners and wardens 496
for national forests, payment, authorization 346
importations, index, note 497
information as to laws, etc 496
proposed work 504
publication 102
interstate commerce 498
proposed work 503
regulations, violations 102
laws, index, note 496
United States and Canada, notes 496
violations, prosecution 498
preservation, Alaska 103
protection and introduction, cooperative work, etc 101–103
discussion 492–498
notes 496
proposed work 503–505
refuges, proposed work 504
Garden, school, work, seed distribution 300
Gardens and grounds, experimental work, 1907 ..... 58, 301–303
Gas cysts, intestinal, hogs, study 222
Geese, wild, suggestion for preservation 501
Geographic distribution, birds and animals 490–491
mammals, proposed study 502
Georgia agricultural school farms, assistance of Soils Bureau 438
Gid parasite, sheep, study 34, 231
Gipsy moth. *See* Moth, gipsy.
Glanders diagnosis, agglutination method 215
study and control 214
Glycerine, examination for impurities 392
Goat, Maltese, diseases, study 222
Grain crops, improvement and extension 53–54, 312–315
exports, value, 1907 21
food-value determination 314
growing, Alaska 676
inspecting and grading, need of uniformity 59, 318
investigations 312–316
Chemistry Bureau 390
proposed work 315
irrigation, note 707
moisture-testing apparatus 59, 317
problems, study 54, 312–316
standardization, proposed work 317
work, 1907 ..... 59, 316–318
testing laboratories, establishment 59, 316–318
winter, area, extension 53, 312, 315
Grains, high altitudes, adaptation 315
small, injury by "green bug," investigations 462–465
Grand River, Michigan, flood, 1907, service of Weather Bureau 160
Grape diseases, control, study 267
investigations, 1907 ..... 292–293, 294
soils, California, study 430
Grapes, pollination experiments 293
resistant stocks, study, work at Chico, Cal., garden 293, 294, 338
Rotundifolia, investigations 293, 295
Grass, lawn, seed, distribution 334
Grasses, improvement, experiments 325
introduction into South 325
Gray's moisture test, butter making 246
Grazing, National Forests, animals, number and value, 1907 64
control, permits, etc 370–371
management, proposed work, etc 370–373
permits, receipts, national forests 68, 371–372
trespass, civil and criminal liability, decisions 68

Page.
Great Basin, dry farming with tillage methods 323
Britain, tuberculin test 210
Plains area, dry land agriculture, correlation of work 318
"Green bug," control by use of parasites, investigation 462–464
investigations 93, 462–465
mechanical artificial remedies, experiments, results 464, 465
Greenhouse operations, construction and repairs 301
soils, study, proposed work 440
Greenhouses, Arlington Experimental Farm 297
Grossbeaks, economic relations, notes on work 490
Grounds, Department, general improvements 302
Guar, introduction and experimental planting 326

Hæmonchus contortus, lambs, control method 230
Halsey forest station, work, cost of planting 361
Hawaii Experiment Station, work 122, 671, 673, 677–683
Hawaiian Islands, nutrition investigation 691
Hay, production and value, 1907 15
Headache remedies, analyses methods 393
Hemp investigations, improvement in retting process 327
Manchurian, introduction, testing 333
Hemorrhagic septicemia, chickens and pigeons, study 224
Herbarium, forest, additions, work, etc 349
Hessian fly investigations 92, 462
Hibiscus sabdariffa improvement, study, Miami subtropical laboratory 337
Highway engineering instruction (*see also* Roads) 135, 726
Hillside erosion, cultivation for prevention 85
Hog cholera. *See* Cholera, hog.
Hogs, blood serum, bacteriolytic power 228
diseases, study 222–223
feeding, cotton-seed products 240
tuberculosis infection from cows, study 233
vaccination against cholera 33, 227–228
Honey industry, investigations, Hawaii Experiment Station 680
production in United States, inadequacy of supply 474
Honey-dew honey, description, price 680
Honey-producing plants, investigations 374, 473
Honeys, pollen examination, Chemistry Bureau 397
Hops, American, investigations 304, 305
maturing, note 708
production and value 18, 639
testing for arsenic 392
Home economics, college courses 694, 699
Horse Book, reprint, authorization 255, 545
breeding work 35, 236
disease, maladie du coit, inspections, eradication 30, 210
"palisade worm," study 34, 231
Horses, American carriage, breeding, classification 35, 37, 236–238
imported, inspection, numbers 209–210
scabies, inspection, spraying 206
swamp fever, study, Bureau Animal Industry 33, 212, 214
Horticulture, special investigations 298–301
HOWARD, L. O., report as Entomologist 443–483
Hunting accidents 497
laws, violations 102
licenses, note 496
Hybrid oats breeding 277
plants production 302
Hydrocyanic acid gas, control of pineapple insects 680
fumigation for citrus trees, proposed work 479
Hygienic table, laboratory work, urine tests, etc 397

Ice creams, examination, Chemistry Bureau 389, 399
Idaho irrigation work 707
Illinois, nutrition investigations 691
Illustrations, work, Publications Division 542, 551–553
Imperial Valley, irrigation conditions 706

Page.
Import animals, inspection and quarantine 31, 208–210
Imports, farm products, 1907 21
forest products, value, 1907 22
Index, card, Experiment Stations literature 669
catalogue, medical and veterinary zoology, work, 1908 232
game importations 497
Indexes, card, Publications Division 553
Indexing work, Publications Division 553
Indian Service, cooperation with Plant Industry Bureau, demonstration farm, Arizona 47
Indiana, drainage of Kankakee River, results, recommendations 130–131, 711
soil surveys, 1907 415
Information section, Forest Service, duties, purpose 347–348
Ink, stamping, for meat inspection 27, 193, 227
Inoculation bacteria, nodule-forming, distribution 54, 286
Insect invesgitations, Porto Rico 686
Insecticides, examinations, Chemistry Bureau 390
experimental work 469
Insects, beneficial, importations 90–91
Black Hills National Forest, investigations 457
cotton, other than boll weevil and bollworm, work 449
disease-bearing 96
field-crop, study 92–93, 462
forest, investigations 95, 456–458
fruit tree, deciduous, investigations 94, 458–462, 479
grain, study 93, 479
peach tree, investigations 458–459
pineapple, Hawaii, control experiments 680
relation to health of man and animals, investigations 468–470
scale, investigations 469
tobacco, investigations 94, 470–471, 479
useful, importation and exportation, Entomology Bureau 91, 451–456
vegetable crops, study 95
Inspection, animals, before and after slaughter 200
certificates for export meats and products, 1907 202
division, Animal Industry Bureau, work 198–203
export animals 29, 207
food and drug, Board, personnel 383
work, officers, organization 72, 384
foods, Washington, D. C., Chemistry Bureau, summary 399
imported animals 31, 208–210
meat, establishments, number, 1891–1907 199
laboratories 226
work, 1907 ..... 27–29, 192–195, 198–203
Inspectors, food and drugs, appointment, training 383
Institutes, special-subject, meetings 661
Institutions cooperating in nutrition investigations 689
Instrument division, Weather Bureau, work, 1907 170–172
Insular work, Experiment Stations, 1907 ..... 121–123, 670–686
Interstate commerce, game, work 498, 503
food and drug inspection 384
Iowa, irrigation for humid sections, experiments 708
Iron compounds, soil, effect on vegetation, note 436
corrosion, investigation by Roads Office 136, 734–735
Irrigation and drainage, chief, resignation 126
investigation, reorganization 126, 700
area, value of crops 13
dikes, damage by rodents 502
economy of water, investigations, work 700–702
extension, cooperation with experiment stations and with Department of Interior 128, 703
investigations, 1907 ..... 127–129, 700–704
loss of water, remedies, experiments 127
power, investigations 704
publications, 1907 714–715

Page.
Irrigation relation of drainage 705, 707
Sacramento Valley, adverse influences 706
water, pumping machinery, efficiency 128
supply limited, experiment 709–710
waters, injurious effects, study, Soils Bureau, notes 435, 436
work, review by States 706–710
Ivy, poison, eradication, proposed study 307

Jamestown Exposition, dairy work, Animal Industry Bureau 40, 249
Plant Industry Bureau exhibit 261
Weather Bureau exhibit 170
Jujube, Chinese date, investigations 281
culture, Chico, Cal., garden 338
Joint-worms, investigations 465

Kalmia latifolia, sheep poisoning, investigations 306
Kansas, Neosho River, drainage surveys and plans 132, 712
soil surveys, 1907 415
Kenai Station, Alaska, work, 1907 675
Kentucky, tobacco, work 272
Kharkof wheat growing, results 312
Kite reel, automatic improvement 171
Kites, ascensions, meteorological observations 23, 143–146
Kodiak live-stock station, Alaska, work, 1907 677

Laboratories, butter, Albert Lea, Minn 246
food and drug inspection 384, 387
grain testing 59, 316–318
meat-inspection establishment 27, 226
Laboratory, animal physiological investigations, work 397
contracts, Chemistry Bureau, work, 1907 393
dairy, work, 1907 389
drug, Chemistry Bureau, work, 1907 391–393
food research, Philadelphia, work 399
fruit analysis, Chemistry Bureau, work, 1907 394
meat inspection 226
microchemical, work 396–397
miscellaneous, Chemistry Bureau, work, 1907 389–391
paper and leather, Chemistry Bureau, work, 1907 395–396
physical, Plant Industry Bureau, investigations, 1907 320–321
plant pathology, work, 1907 262–265
seed, work, 1907 328–330
studies, tobacco 272
sugar, Chemistry Bureau, work, 1907 388
vegetable, physiological investigations, work 398
Washington, bacteriological-chemical investigations 398
Lacey Act, enforcement, notes 492, 498, 503
Lambs, raising, "bare-lot" method to prevent worm infestation 230
Lands, examination for new National forests, work 357
exhausted, soil surveys, suggestions for use 82, 418, 427
National forests, settlement, applications, etc 357–358
Larkspur poisoning, investigations 306
Latex coagulation experiments, Hawaii 682
Lathyrus tingitanus, value as a green manure crop 326
Laurel, mountain, sheep poisoning, investigations 306
Law, food and drug, violation, method of prosecution 385
Lacey Act, violations, suits, etc 766–767
office, Forest Service, proposed work for 1908 347
scope of work 345
transfer to office of the Forester 345
work, 1907 345–347
twenty-eight-hour, history 763–766
violations, suits, etc 762–763
Laws, extracts bearing on departmental service 744–745
extracts from United States compiled statutes 1901 743–744
game, complexity and publication 102
index, etc 496

Page.
Leather and paper laboratory, Chemistry Bureau, work, 1907 395–396
examination 395
Lectures, farmers' institutes, illustrative material, demand 661
Legislation affecting forest service 346–347
forest, important 346
Legumes, dried, nutritive value and digestibility 694, 698
Leucocyte counts, milk and cream samples 397
Librarian, report 645–648
Library, growth of force, 1881–1907 754
periodicals 646
publications 595, 646–647
silviculture, prints, lantern, slides, etc., collection and distribution. 365–366
use by scientists, loans, etc 647
Weather Bureau, work, 1907 172
work, 1907, review by secretary 115–116
Licorice roots, introduction 332
Spanish, field, work 304
Life zones and crop zones, studies, Biological Survey 100
remarks 491–492
Lime-sulphur wash, control peach blight 42
remedy for San Jose scale, tests 461
Littlefield report, expenditures of Department, tabular statement 517–518
Live-stock agent, bribe offered, case 773
associations, cooperation with Forest Service 372
breeding work 35–36, 236–238
census, quinquennial, recommendation 642
distribution, Porto Rico Experiment Station 683
farm, sold and slaughtered, value, comparison with cotton 20
grazing, National forests, number and value, 1907 64
shipment, twenty-eight-hour law, violations, suits, etc 762–766
station, Kodiak, Alaska 677
statistics, preparation Statistics Bureau 639
transportation, inspection, violations of law 197
Loco weed disease, experiments, control of weed 305–307
Louisiana demonstration farms 340
drainage survey 712
irrigation work 708
soil surveys, 1907 416
Lumber, statistics, reports from manufacturers, etc 376

Macaroni, use of durum wheat 10, 53
Machinery, cotton improvement 270
rice, experiments, Hawaii Experiment Station 683
Magnetism, study, Mount Weather Observatory 148–149
Mahogany, commercial importance, investigations 349
Mail weighing, postal estimates, etc 107, 549
Maine nutrition investigations 692
Maladie du coit, inspections, eradication 30, 210
Mallein, distribution 34, 228
Malta fever, goats, investigations 222
Maltese goat. *See* Goat.
Mammalogy, economic, work for 1908 500–502
work of Biological Survey 485–490
Mammals, beneficial and injurious, remarks 486
identification 492
importation, supervision, and control 101, 493
study proposed 502
Mange, cattle, eradication, inspections, dippings 30, 206
Mango culture, Porto Rico, use as windbreaks 685
improvement work, Miami subtropical laboratory 337
industry development 44, 332
Mangosteen growing, Canal Zone, experiments 333
Maps, soils, practical uses 78–83, 423–425
weather, issued from stations, 1907 188
Marine charts, daily, value and scope 167
climatology, tabulation, Weather Bureau 168
observers, number of vessels and reports, 1907 166

Page.
Market inspection 199
Marketing apples, methods 55, 289, 294
fruit studies 289, 294
Maryland, nutrition investigations 692
tobacco, work 272
wheat demonstration, work 315
Massachusetts, nutrition investigations 692
Matting material, production 44, 331, 333, 339
rushes, cultivation, Chico garden 338, 339
McCabe, Geo. P., report as Solicitor 759–776
Meal, corn, nutritive value and digestibility, investigations 692, 694
Meat cooking experiments 124, 691, 698
inspection, causes of condemnation 201
establishments, number, 1891–1907 199
exemptions 199
expert commission, personnel 28, 193
laboratories 226
law, operation; regulations, preparation 192–195, 774
State regulations, necessity 29, 194
work, 1907 ..... 27–29, 192–195, 198–203
products, export, inspection certificates 202
preparation, supervision 201
supplies and surplus, statistics 114, 639
Meats, export, inspection certificates 202
preparation, supervision 201
souring and other changes, investigations 227
Melons, wilt-resistant, breeding 52
Melvin, A. D., report as Chief of Bureau of Animal Industry 191–255
Merriam, C. Hart, report as Chief of Biological Survey 485–505
Mesenteric emphysema, hogs, study 222
Metabolism. *See* Nutrition
Meteorological instruments, ship use 171
records, Weather Bureau, work, 1907 173
Meteorologists, foreign, study of American Weather Bureau Service 26, 157
Meteorology, ocean, local offices work, equipment 167
work, 1907 166–168
teaching in schools and colleges 175
Mexican cotton boll weevil. *See* Boll weevil, cotton.
Miami subtropical laboratory and garden, work 335–338
Mice, field, control, study 99–100, 500
Michigan soil surveys, 1907 416
Micro-chemical laboratory, work 396–397
Microscopes, high-power, improvement 283
Microscopic inspection, pork, discontinuance 203
Milk and cream contests 249
secretion, study 40, 247
sickness, investigation 306
supply, improvement 38, 195, 248
investigations, District of Columbia 32, 39, 217, 218, 248
tuberculous cattle, use 217
Milks, analysis, Chemistry Bureau 389, 399
Mine props, treatment, preservative 70
tailings, effect on soils, study, Soils Bureau 435, 436
Minerals, soil, solubility, study 436
Mink farming, remarks 502
Minnesota, Albert Lea laboratories, butter and cheese investigations 38, 246
nutrition investigations 692
tile-drainage investigation 712
Minnows, top, mosquito control, investigations, Hawaii 680
Mississippi, Delta region, drainage investigations 132
demonstration farms 340
drainage survey 712
River soil waste, estimates 440
soil surveys, 1907 416
Missouri, nutrition investigations 693
soil surveys, 1907 417
Modesto irrigation district, remarks 707

Page.
Moisture content, atmosphere, measurement apparatus 172
grain, testing apparatus, development 59, 317
soil, constituents, determination by centrifugal machine 320
solutions, plant nutrients, distribution 76, 435–436
Molasses, production and value, 1907 17
Moneys, public, from sales, deposit and use 511–512
Monodontus trigoncephalus, lambs, control method 230
Montana, sheep losses from gid 231
MOORE, WILLIS L., report as Chief of Weather Bureau 143–189
Morgan, horse-breeding work, 1907 236
Morphine extraction from poppies, experimental work 303, 304
Mosquitoes, Canal Zone, investigations 468
control by top minnows, investigations, Hawaii 680
Moth, brown-tail, control measures 89, 449, 452
laboratory at North Saugus, Mass., work 452
parasites 90
codling, investigations 459–460
gipsy, parasites 90
proposed work 480–481
work of Entomology Bureau 89, 449–451
Moths, gipsy and brown-tail, appropriations for destruction 451
Mount Weather buildings, construction, cost 180–181
Observatory. *See* Observatory.
Mulberry plantation, Bureau of Entomology at Arlington Experimental Farm 295
stock, distribution 476
Mules and asses, imported, inspection, number 209–210
Mycotic stomatitis, study 220

National Forests. *See* Forests, National.
Nebraska drainage survey, tile-drainage experiments 712
irrigation work 708
soil surveys, 1907 417
Necrotic dermatitis, sheep, study 222
Negri bodies, diagnosis of rabies 219
Nelson amendment, extension of agricultural courses 649
Nematode diseases, studies at Miami subtropical laboratory 335
Nematode-proof tobacco, breeding 51, 272
Nevada, Fallon Experiment Farm, crop work, 1907 323
irrigation work 708
New England, swamp lands, study 712
Hampshire soil surveys, 1907 417
Jersey swamp lands, study 712
Mexico, biological survey, work 492
York, nutrition investigations 693
soil surveys, 1907 417
Newcastle Irrigation Extension Farm, dry farming, etc 710
Nicotine content tobacco, studies 272
Nodule forming bacteria, distribution 54, 286
Normals, new system, Weather Bureau 173
North Carolina, drainage survey 713
soil surveys, 1907 418
Dakota, Red River of North, drainage surveys 131, 713
soil surveys, 1907 418
Nurseries, forest, plantations 359–362
Nursery work, Arlington Experimental Farm 298
Nutrition, animal, experiments with respiration calorimeter 36, 240
investigations, cooperation, Office Experiment Stations with other
Experiment Stations Office 123–126, 686–700
institutions 123–125, 689–694
proposed work 700
results, distribution to public 125–126, 697
Nuts, nutritive value, investigations 123, 690, 696, 697

Oak woods, studies, work 349
Oats breeding, improvement 276

Page.
Oats production and value, 1907 16
winter, establishment, experiments 312
Observatories in course of construction 181
Observatory buildings, value in Weather Bureau, work 181
Weather Bureau, owned or rented by Department ... 178–180
Mount Weather, administration building, destruction 24, 149
meteorological work 23–24, 143–150
Observers, Weather, new, instruction 188–189
Ocean freight rates, study, Statistics Bureau 640
meteorology, local offices, work, equipment 167
work, 1907 166–168
Œsophagostomum columbianum, lambs, control method 230
Ohio River flood, 1907, service of Weather Bureau 160
soil surveys, 1907 419
Oil cake and meal, exports, value, 1907 21
wood, tree introduction 332
Oils, coal and petroleum, distillates, studies 379
creosote, studies 374
vegetable, exports and imports, value, 1907 21
Olive culture, Arizona, California, and Texas 281
Olives, drought-resistant, introduction 46, 281
OLMSTEAD, VICTOR H., absence, taking Cuban census 629
Onions, Bermuda, investigations, seed production 300
successful culture, Texas, note 421
Oranges, handling and shipping, improvement 55, 289
Orchard cultivation experiments, Arlington Experimental Farm 296
experimental, Arlington Experimental Farm 288
irrigation, experiments 707
Orchards, deciduous, Hawaii Experiment Station 681
tropical, Hawaii Experiment Station 681
Orders and regulations, Secretary, duty of Solicitor 773–774
Oregon, irrigation experiments 708
Oriental plant explorations and introductions 43, 331
Ornithology, economic, work for 1908 500–502
of Biological Survey 485–490
Osier willow plantation, Forest Service at Arlington Experimental Farm 295
Oxidation, soil, necessary to destruction of toxic bodies 434
Ozark regions, apple diseases, control 41, 266, 295

Packing-house products, imports, value, 1907 221
PAGE, LOGAN WALLER, report as Director of Office of Public Roads 717–740
"Palisade worm," horse disease, study 34, 231
Panama straw palms, planting in Porto Rico 685
Paper and leather laboratory, Chemistry Bureau, work, 1907 395–396
photographic developing, examination 396
pulp, sources, investigations 70
Papers, investigations 395
Paprika peppers, experiments 304
Paraffined-pot method, study of manurial requirements of soils 437
Parasites, animal, and parasitic diseases, work, Bureau Animal Industry .. 34, 230–232
collection, catalogue entries 232
cotton boll weevil, control 87
enemies to gipsy and brown-tail moths, importations, work of Entomology Bureau, etc 90, 451–455
Paspalum dilitatum, introduction and value in southern States 325
Pastures, sheep, infestation with worms, study and experiments 230
Patents, applications by Department employees 775
Pathological division, Animal Industry Bureau, work, 1907 212–226
Pea, Tangier, value as green manure crop 326
Peach blight, California, control 42, 266
borer investigations 460
diseases, study 265–266
spraying, sulphur wash, prevention of foliage injury 41
wild, experiments for production of drought-resistant fruit 46
Peanuts, experiments, 1907 300
Pear blight, eradication, study 41, 265

Page.
Pecan studies, plans 295
Pedigree Record Associations, supervision 241
Pelican Island, bird reservation, remarks 494
Pennsylvania nutrition investigations 694
soil surveys, 1907 419
wheat demonstration work 315
Peppers, cayenne, experimental work 304
paprika, experiments 304
Perfumery plant production, proposed work 305
Periodicals, library 646
Peruvian alfalfa, life history, study 45, 280
Pheasants, importations, notes 493
Phenological investigations, cooperative work 294
Philadelphia food research laboratory, work 399
Photographic prints and lantern slides, sale, proceeds 552
work, Publication Division 551-553
Photomicrographs, study, Chemistry Bureau 397
Photography, Forest Service, demands, facilities, etc 357
Physical laboratory work, Soils Bureau 434
Pigeon cholera, study 224
tuberculosis, study 219
Pilot charts, Navy Department, information furnished by Weather Bureau 168
PINCHOT, GIFFORD, report as Forester 343-380
Pine lands, cut over, agricultural uses 426
Pineapple industry, Porto Rico 685
insects, pest, Hawaii, control experiments 680
rot, control, Hawaii experiments 681
Pistache nut, cultivation, distribution 281, 337, 338
culture, extension 281
Pistacia spp. *See* Pistache.
Pittsburg Exposition, Weather Bureau exhibit, 1907 170
Plant analysis laboratory, Chemistry Bureau, work, 1907 394
breeding, Alaska 675
work 269-278
diseases, study, summary 265
food ingredients, sources in soil formation 76, 435-436
Industry Bureau, appropriation, 1907 257
business operation, 1907 257
cooperation with Indian Service, demonstration farm, Arizona 47
cooperation with other Bureaus in Department 260, 323
exhibit at Jamestown Exposition 261
growth, 1881-1907 751
organization and policy, 1907 259
publications, 1907 ..... 258, 595-601
reference book 259
relations with Agricultural Experiment Stations 261
report of chief, 1907 257-341
work, 1907, review by Secretary 40-61
oriental explorations and introductions 43, 331
Plants adapted to alkali soils 273
disease-resistant, breeding 52, 277
honey-producing, investigations 473, 474
hybridization work 302
importations, inspection by Department of Agriculture 471-472
life-history, studies 44-47, 278-283
Platte Valley, irrigation, note 708
Poison, corn cockle for chickens 223, 307
Poisonous plants, studies 57, 305-307
substances in soil, harmful to plant growth, nature, control 76, 432-434
Poles, treatment, preservative 70
Pollination grapes, experiments 293
Polygnotus, enemy to Hessian fly, investigations 462
Polyporus igniarius, life history study 268
Pomological collections, studies 288
Pomology, investigations 287-295
publications, 1907 601

Page.
Ponies, breeding Alaska, recommendation 677
Poppy, experimental work 303
Pork exports to countries requiring microscopic inspection 203
raw, danger of trichinosis 195
Porto Rico Experiment Station, work 122, 672, 683–686
Posts, fence. *See* Fence posts.
Potato, sweet. *See* Sweet potato.
Potatoes, alcohol, introduction from Russia 332
growing, Alaska 675
Irish, testing varieties 299
production and value, 1907 16
wilt-resistant, breeding 264
Potash extraction from feldspathic rocks, investigation, Roads Office 136
Poultry and eggs, value, 1907 20
breeding and feeding, investigations 36, 239, 241
digestion experiments 229
dressed, prices 1899, 1903–1907 20
products, value, comparison with wheat and hay 20
size of flocks, and floor allotment to each fowl, study 239
Preserves, game 497
Prickly pear, stock feed value 61
Printing, appropriation and expenditures 541
costs, estimates, reports to Congress 545
estimates 542
expenditures by various Bureaus, etc 557, 560
Office, branch, work, 1907 554, 560, 561
requisitions, authority of Editor 545
requisitions, Publications Division, 1907, increase over 1906 542, 560, 561
Weather Bureau, 1907 176
Project filing, method, advantages, etc 104
Prussia, forests, outlay and returns 62
Publication, serial, agricultural education, recommendation 659
statistics 556–561
Publications, Animal Industry Bureau, 1907 255, 565–570
annual, reduction 546
specially authorized, remarks 105, 546, 548
Biological Survey 570–571
by classes 1904–1907 556
Chemistry Bureau, 1907 400–401, 571–573
Congressional 562–564
Division, growth, 1881–1907 754
publications, 1907 602
recommendations 555
report of Chief, 1907 541–627
work of year, summary 542–555
work, 1907, review by Secretary 105–107
Entomology Bureau 573–579
Experiment Stations Office 579–590, 665–670
Forest Service 380, 590–595
general, preparation and revision 548
Irrigation and Drainage, 1907 714–715
issued 1907, list, details, number of copies 562–608
number, 1898–1907 557
copies and pages by Bureaus, Divisions and Offices, 1907 557
nutrition work 694–697
Plant Industry Bureau, 1907 258, 595–601
received and distributed by Division of Publications, 1907 609–625
by Weather Bureau, 1907 625–627
reprinting by Experiment Stations, suggestion 107
Roads Office 603–606, 736
sale by Superintendent of Documents, number, value 105, 544
Secretary's Office 564
Soils Bureau 606–607
Statistics Bureau 605–640
Weather Bureau 607–608
weight of mail forwarded by Division 107–549

Pulp, paper. *See* Paper. Page.
Pure-food law, work 774

Quail disease, study 33, 221, 496
Quarantine division, Animal Industry Bureau, work, 1907 206–212
imported animals 31, 208–210
laws and regulations, relation to forest grazing 372
provisions, animal diseases 30, 206–210, 771–772

Rabbit pest, control 99
Rabbits, damage to forest stock, San Gabriel forest 360
destruction by bacterial diseases 487
Rabies investigations, Bureau Animal Industry 33, 219–220, 234
Rain gauge, improvement 171
Rampart station, Alaska, work, 1907 676
Range, National Forests, conditions 64, 67–68
Ranges, experimental plantings 362
National Forests, reseeding, studies 373
Rats, house, control experiments, etc 99, 487, 500
wood, damage to forest stock, San Gabriel forest 360
Reclamation Service, cooperation with Soils Bureau 425
Recommendations by Secretary 25, 65, 67, 107, 119, 120, 123, 126, 138, 505
Red gum diseases, study 268
Refrigeration, fruit for shipment 291
Renovated butter inspection 40, 255
shipment in violation of law, case 769–770
Rental, buildings, District of Columbia, 1907 105
Reservoirs, evaporation, problems 26, 156–157
Respiration calorimeter. *See* Calorimeter.
Rice blast, control, study 263
coating artificial, detection, study 385
dry-land varieties, experiments 683
experiments, Porto Rico 284
exports and imports, 1904–1907 18
investigations, Hawaii Experiment Station 682
selection of large-grained varieties 314
irrigation, note 180
lands, crop adaptation, experiments 299
soy beans for rotation 49
machinery experiments, Hawaii Experiment Station 683
new varieties, introduction 44, 331, 332
production and value, 1907 18
region stations, Weather Bureau, 1907 161
River and Flood Service, Weather Bureau, work, 1907 158–160
service, Weather Bureau, extension, recommendation 25, 159
Road building, dissemination of information, proposed work 734
expert advice, aid of Department 134
construction and maintenance methods 133, 719–726
improvement lectures, etc 135, 728–730
materials, tests; classification 726, 732
investigations in several States 137
properties, investigations by Department 135
preservatives, investigations 138
Roads, county systems, aid of Department 137, 734
dust preventives, investigations 138, 732
methods of construction, location, cost, etc., work of Roads Office 720, 722
gravel, methods of construction, location, cost, etc., work of Roads Office 723–725
earth, improvement, importance 731
highway engineering instruction 726
macadam, methods of construction, location, work of Roads Office 719–726
mileage revenues and expenditures, 1904 ..... 133, 731
object-lesson, construction, cost, etc 133–134, 719–726
Office, cooperation with Forest Service, etc 136, 726–727
expenditures by projects, 1907 736–737
growth, 1893–1907 755
proposed work 737–740
publications, 1907 603–605

Page.
Roads, Office, report of Director 717–740
work, review by Secretary 132–138
rural-delivery, inspection by Roads Office 731–732
sand-clay, methods of construction, location, cost, etc., work of Roads Office 721–722
work under way 725–726
Rock, decomposition under action of water, investigations by Roads Office .. 735
Rodents, control investigations 99
injury to dikes 502
Root-galls, study 263
Root-worm, grape, proposed work 479
Roselle improvement, study, Miami subtropical laboratory 337
Rot, brown, peach and plum, investigations 267
cocoanut bud, study, control 263
pineapple, control Hawaii experiments 681
Rotundifolia grapes, investigations 293, 295
Roundworms, sheep, study 34, 230
Rubber industry, Hawaii, investigations 681
plantations, studies 285
tapping systems, experiments, Hawaii 681
trees, varieties, yield 286
Rust, grain, investigations 314
Rust-resistant asparagus, breeding 52, 277
Rye, production and value, 1907 17

Sacramento Valley, irrigation, adverse influences 706
Sago, starch determination, study 397
Salaries, Weather Bureau, 1907 182–188
Salton Sea, evaporation studies by Weather Bureau 25, 152–157
report of Board 153–155
history, importance of evaporation studies; availability 155, 156
Samar matting sedge, introduction 333
Samples, drugs, examination 73, 392
San Gabriel forest, destruction of forest stock planted 360
Jose scale investigations 461
Marcos forest station, work 360
Santa Barbara forest, planting, cost, work, etc 360
Sap-rot forest trees, study 268
Saxony, forests, outlay and returns 62
Scab, sheep, inspection, dippings 30, 205–206
Scabies, cattle. *See* Mange.
eradication retarded by removal of fences 197
horses, inspections, sprayings 206
sheep. *See* Scab, sheep.
Scale-eating birds, investigations 97, 490
School, agricultural, farms, assistance of Soils Bureau 438
garden work, seed distribution 300
Schools, agriculture teaching, growth of movement 119, 656
movable, foreign countries 663
supplementary to Farmers' Institutes 662
Scientists, Agriculture Department, number in several branches of Department 756
Score cards, system for creameries 251
Secretary, Agriculture. *See* Agriculture.
Office, publications, 1907 564
Seed adulteration, decrease 57, 329
alfalfa, production, encouragement 47, 324
bed, tobacco, sterilizing to prevent root rot disease 265, 271
beet, American, production and testing 56, 309
high grade pedigree strains, establishment 308
single germ, development 309
testing 309
Bermuda onion, investigations 300
Congressional distribution 58, 334
corn preservation methods 276
selection, results 274
cotton, separation, grading 50, 269

Page.
Seed foreign, introduction 330–333
laboratory work, 1907 328–330
selection, cotton breeding 270
studies, progress 57, 330
testing work, 1907 328
vitality experiments 329
Seepage, irrigation, notes 706, 707
Seismological work, Weather Bureau 25, 151–152
Seismology, National Bureau, Strasburg, Germany, formation 25, 152
Serum blood, hog, bacteriolytic power 228
Sewage disinfection, use of copper sulphate and chlorin 287
Shaftal, clover, introduction, experiments 279
Sheep, bighead, study 306
breeding, Alaska, recommendation 677
for wool and mutton 35, 238
dips, official use 34, 229
imported, inspection, numbers 209–210
necrotic dermatitis, study 222
parasites, study 34, 230–231
pastures, infestation with worms, study and experiments 230
poisoning by mountain laurel 306
protection from coyotes by fence 486
scab, dippings, inspection 30, 205–206
treatment, dips 232
Shipping fruit tests 290
services of telegraph division of Weather Bureau 176
Shore birds, North American, distribution 492
protection, need of legislation 98
Shorthorns, milking, breeding work 35, 238
Shot-hole disease, peach, study 266
Silk culture, work, 1907 ..... 95, 475–477
imports, value, 1907 22
reeled, sale by Department 476–477
Silkworm eggs, purchases and distribution 475–476
Siloing seed beets 310
Silos, erection, southern States, average cost 243
Silvics, data, compilation, library, etc 365–366
field studies 364
work of Forest Service 364–366
Silviculture, proposed work 363–364, 366
work, management, etc 68–69, 359–370
Sirup, production and value, 1907 17
Sisal plants, importation, Porto Rico 684
Sitka station, Alaska, work, 1907 675
Smelters, tailings, effect on lands and crops adjoining 391
Smut, grain, investigations 314
Smut-resistant oats, breeding 277
Snakeroot, connection with milk sickness, investigations 306
Snow and Ice Bulletin, scope, size of edition, 1907 163
Soil bacteriology, work 54, 286
erosion, study 83–86, 440
fertility problem, study 75–77, 432–434
improvement studies, Arlington Experimental Farm 296
indicator, native growth 274
minerals, solubility, study 436
moisture constituents, determination by centrifugal machine 320
solutions, plant nutrients, distribution 76, 435–436
survey work, area surveyed and mapped, 1907, cost per square mile .. 75, 411–413
surveys, demands from various classes 424
utilization problems, study by Soils Bureau 425–432
wash, annual waste, estimates, study 441
Soil-test farm, proposed work 439
Soils, advance sheets, Field Operations 562–563
Bureau, cooperative work 425, 434, 438–439
educational tours 80, 431
growth, 1895–1907 752
publications, 1907 606

Page.
Soils, Bureau, report of Chief, 1907 411–441
work, 1907, review by Secretary 74–86
corn, study 429
cotton, study 428
fertilizer requirements, study 437
formation, plant food ingredients, sources 76, 435–436
grape, California, study 430
infertility, causes 432–434
manurial requirements, study, Soils Bureau 437
maps and reports, practical uses 78–83, 423–425
reports, practical uses 78–83, 423–425
tobacco, study 77–78
toxic substances, nature, origin, control 76, 432–434
Soy beans, new variety, introduction 326
rotation on rice lands 49
Solar physics study, Mount Weather Observatory 146–148
radiation observations, Mount Weather 146–148
Solenopsis germinata, enemy to cotton-boll weevil 448
Solicitor, correspondence with Department of Justice 762–763, 773
duties 759
Office, work, 1907, review by Secretary 139
report 759–776
Sorghum, classification, study 313
culture, extension 48, 313
South Carolina, drainage survey 713
soil surveys, 1907 419
tea culture investigations 307
Dakota, irrigation work 709
soil surveys, 1907 420
Texas garden, Brownsville, Tex., establishment 339
Southern States dairying 242–243
Sparrow, English, investigations 500
"Special use" applications, National forests, disposition of cases 346
Spices, samples, examination for Maine Experiment Station 397
Spraying demonstrations, apple diseases 266
for codling moth, work of Entomology Bureau in cooperation with Plant Industry Bureau 459–460
foliage injury, prevention 41, 266
tropical fruits, Bordeaux mixture 336
Squirrel, ground, study 500
Squirrels, ground, destruction by bacterial diseases 487, 488
Stamp, meat inspection 27, 193, 227
Standardization, grain, work, 1907 ..... 59, 316–318
Starch, raw and cooked, digestibility study 693
Stations, weather, new, recommendations 177
Statistical agents, State 113, 636, 642
work, appropriations, 1863-1907 631
Statistics Bureau, growth, 1881–1907 753
publications, 1907 ..... 605, 640
recommendations 641
report of Acting Chief 629–644
work, 1907, review by Secretary 108–115
crop, growth and development 108–109, 629–631
international trade and production 114, 638
Steer feeding experiments 36, 240
Stenographers and typewriters, Forest Service, work, number, etc 357
Stock dips, experiments 229
farms, cropping systems 60
feed, prickly pear, value 61
See also Live stock.
Stomatitis, mycotic, study 220
Storage, cold. *See* Cold storage.
fruit, investigations 290–292, 294
Strongyloides longus, sheep, infestation method 231
Stump Lake, bird reservation, remarks 495
Sugar and molasses imports, value, 1907 21
beet, factories, land values 11

Page.
Sugar, beet, factory, by-products 312
investigations 56, 308–312
production, 1879–1907, increase and value 11, 56
See also Beet, sugar.
beets, irrigation experiments 707
See also Beets, sugar.
cane experiments, Porto Rico 684
laboratory, Chemistry Bureau, work, 1907 388
production and value, 1907 17
table prepared by Statistics Bureau 639
region stations, Weather Bureau, 1907 161
Sulphur dioxid, injuries to vegetation, study 391
in food, effects, study 73, 386, 398
testing for arsenic 393
Sulphur-lime wash, peach spray experiments 41
Sumacs, tannin content, investigation 395–396
Sun spots, relation to magnetism, investigation 149
Supervisors, forest, duties 350
meetings 351
Supplies, annual, report 511
contract, examination Chemistry Bureau 74, 393
Forest Service, management 356
Surgery appliances, sterilization, study 399
Surra, inspection of animals imported 208
study, Bureau Animal Industry 33, 211, 213
Swallows, usefulness and increase, notes 489
Swamp fever, horses, causes, symptoms, treatment 211, 212–213
study, Bureau Animal Industry 33, 211, 212
land acreage, United States, value when reclaimed 74, 80
lands, study 78, 429
tide lands, reclamation 132, 712
Sweet corn for canning and table use, improvement 275
potato, alcohol, study 394
potatoes, investigations 299
Swine, imported, inspection, numbers 209–210
Swiss cheese, investigations 247
Tabanids, enemies, exportations to France 456
Tabulation, crop reports, improved methods 637
Tagging cattle tested for tuberculosis 217
Tanning material, investigations 395
Tapioca starch determination, study 397
Tea culture investigations, and plans 307–308
Teachers, card directory 657
Telegony, study 239
Telegraph division, Weather Bureau, services to shipping 176
Telegraphy, wireless, Weather Service 169
Telephone companies, cooperation with Weather Bureau, forecasts 164
Tennessee, nutrition investigations 694
soil surveys, 1907 420
Tequila varieties, investigations 327
Texas, Amarillo Experimental Farm cereal work 314
Brownsville, south Texas garden establishment 339
cattle tick. *See* Tick, cattle.
date garden, establishment 45, 278
demonstration farms 340
fever control 203
irrigation experiments 709
San Antonio Experiment Farm, work, 1907 321–322
soil surveys, 1907 421
tea culture investigations 308
"The Forest Atlas" Section, establishment, purpose, etc 369–370
Thielavia basicola, cause of tobacco root-rot, study 265, 271, 321
Thielaviopsis ethaceticus control experiments, Hawaii 681
Tick, cattle, eradication, work of Animal Industry Bureau 29, 196, 204
investigations 468–469
Texas, study 96

Page.
Tile drainage investigations 130, 712
Timber land, soils, use after clearing 81, 426
mine, preservation, work of Forest Service 379
preservation, study 70
sales, Indian lands, investigations 369
National forests, amount, management 366–368
cooperation with State experiment stations 369
receipts, 1907 69
scarcity, increase 65
standing, census, need 65
strength tests 70
tests, work of Forest Service, results 375–376
use against soil erosion 86
vehicle, tests 375
wolves, depredations and control 486–487
Timbers, structural, preservation, experiments 379
Timothies, improvement 48, 325
Tin determinations, food 386
TITUS, E. S. G., brown-tail moth investigations, note 452
Tobacco crop, handling, improvement 52, 271
curing, study 271
experiments, Hawaii Experiment Station 678
Porto Rico 684
imports, value, 1907 21
insects, investigations 94, 470–471
nematode proof, breeding 51, 272
production and value, 1907 17
root-rot control, study of soil conditions 265, 271, 321
seed distribution 334
shade grown 51, 271
soils, Florida, note 415
study, Soils Bureau 77–78
testing, nicotine content, studies 272
type variations, study 77–78
unmanufactured, exports, value, 1907 21
Tobaccos, improved, breeding 51, 270
Tomato diseases, study, Miami subtropical laboratory 336
Toxoptera graminum. *See* "green bug."
Trade balance, farmer's interest 22
Board, National, reference to Statistics Bureau 643
foreign, 1907 21–22
international, and production, statistics 114, 638
wastes, examination, Chemistry Bureau 391
Transportation, fruit, investigation 289–291, 294
Tree planting, National forests 360–362
Trees, geographic distribution 491
Trespass, cases referred to law office, Forest Service, settlement, etc 345, 346
Trespasses, grazing, damage, cases, etc 372
Trichinæ inspection, discontinuance 28, 194
Trichinosis, danger from eating raw pork 195
Trifolium pratense foliosum, experiments, seed production 279
suaveolens, introduction, experiments 279
Tropical fruits culture, collection, Chico, Cal., garden 338
diseases, study, Miami subtropical laboratory 336
products, annual consumption, United States 670
Truck crops, insect enemies, investigations 466
production, shipping and sale, study 298
TRUE, A. C., report of Director of Office of Experiment Stations 649–715
Trypanosoma evansi. *See* Surra.
Tubercle bacilli, butter 216, 233
human, bovine, and avian, studies 32, 216
type, transformability, study 216
virulence, mode of transmission 216, 233
Tuberculin, distribution 34, 228
test, Great Britain 210
tests, dairy cattle 32, 216–218, 235
Tuberculosis investigations, Bureau Animal Industry 31–32, 215–219, 233

Page.
Tumors, plant roots or stems, study 263
Tung-shu, wood-oil tree, introduction 332
Tupelo gum diseases, study 268
Turkeys, blackhead disease, study 235
wild, note 497
Turlock irrigation district, remarks 707
Turpentine investigation, chemical studies, cooperation with University of North Carolina 349
results 348–349
waste pine products 70
Turpentines, wood, investigation 396

Udo, Japanese, introduction 333
Underdrainage problem, notes 705
Urticaria, hogs, study 223
"Use Book" revision, improvement 350
Utah, drainage survey 713
irrigation experiments 709

Vaccination, hog cholera, experiments 33, 227–228
Vaccine, blackleg, distribution, results 34, 225–226
Vanilla experiments, Miami subtropical laboratory 337
Vegetable crops, insects injurious, investigations 95, 465–466
physiological investigations, laboratory, work 398
physiology and pathology publications, 1907 601
Vegetables, garden, testing, work, 1907 333
growing, Alaska 675
Venereal disease, horses, eradication 30, 210
Vermont, horse-breeding, work, 1907 236
Vessels, cattle, inspection 207
wireless telegraphic, Weather Service, list 169
Vetch, early maturing, discovery 49, 326
hairy, cover crop for tobacco 271
Vetches, experiments, early maturing species 326
Vicia dasycarpa, early maturing vetch, tests 326
Vinegar, caramel, fuller's earth test 385
Vineyards, cooperative, viticultural investigations 292
Virginia demonstration farms 340
drainage survey 713
soil survey, 1907 422
Viticultural investigations 292–293, 294

Wardens, game 496
Washington, drainage survey 713
irrigation work 709
laboratory, bacteriological-chemical investigations 398
soil survey, 1907 423
Wastes, trade, examination, Chemistry Bureau 391
Water contamination studies 55, 287
economy in irrigation, investigations, work 700–702
examination, Chemistry Bureau 390, 398
farm, supplies, improvement 55
soil, preservation, study 84
supply, dairy farms, examination 229
system installation, Hawaii Experiment Station 677
Watermelon, wilt-resistant, breeding 264
Weather Bulletin, National, description, size of editions 162
Bureau, Chief, report, 1907 143–189
correspondents, by States 163
employees, examinations for promotion 177
number, changes, salaries, etc., 1907 182–188
library, work, 1907 172
printing, 1907 176
publications, 1907 607–608
Service, study by foreign meteorologists 26, 157
work, 1907, review by Secretary 23–26
forecasts and warnings, service, 1907 150–151

Page.
Weather forecasts, importance of upper-air studies 24, 144
maps issued from stations, 1907 188
observers, new, instruction 188-189
reports, wireless, 1907 169
Review, Monthly, contributions, new features, 1907 174-175
stations, new, recommendations 177
Weevil, cotton boll. *See* Boll weevil.
Weevil-resistant cottons, breeding 50, 284
West Virginia soil surveys, 1907 423
Western agricultural extension work, 1907 321-322
Wet-land crops, introduction 332
Wheat demonstration work, Maryland and Pennsylvania 315
deterioration, causes, investigations 315
improvement, Pacific coast 313
Kharkof, growing, results 312
production and value, 1907 16
region stations, Weather Bureau, 1907 161
Wheat-grasses, successful growing in the West 325
Wheats, investigations, Chemistry Bureau 398
White fly investigations 93, 466, 481
WHITNEY, MILTON, report as Chief of Bureau of Soils 411-441
Wichita National Forest, herd of buffalo 71
WILEY, H. W., report as Chief of Bureau of Chemistry 381-409
Willamette Valley, irrigation experiments 708
Willow, basket, yield of holts, etc 349
WILSON, JAMES, report as Secretary of Agriculture 9-140
Wilt-resistant cotton, breeding 264
watermelons and cowpeas, breeding 264
Wind River Valley, irrigation 710
vane recording, improvement in construction 170
Wind-breaks for citrus orchards, Porto Rico 685
Winter grain area, extension 53, 312, 315
irrigation, experiments 707
Wireless telegraphy, Weather Service 169
Wisconsin Experiment Station, cooperation in cheese investigations 38, 246
soil surveys, 1907 423
Wolves, extermination in National Forests, etc., problem 486-487
methods 100
fence, proposed experiments 500
Women, aged, dietary study 694
Wood chemistry, proposed work of section 377
work of Forest Service 373-374
distillation, destructive, study 396
studies 70
Forest Service 374
preservation, investigations, work and proposed work of Forest Service. 377-380
pulp, laboratory at Boston, woods used, etc 374
stain, study 268
uses, proposed work of section 377
utilization office, purpose, work 372-373
Woodland management, assistance to private owners, Forest Service 69
Woodruff, George W., work as Chief of Law Office, Forest Service 345-346
Woods, preservation of different species, work of Forest Service 378-379
Wool imports, value, 1907 22
Worms, sheep and lambs, control methods 230
Wyoming, irrigation experiment 709-710

Yeasts, pure cultures, for ciders, etc., Chemistry Bureau 388
Yellow diseases, fruit trees 266

Zapupe, investigations 327
Zinc determinations in food 386
Zones, crop and life, remarks 491-492
Zoology division, Animal Industry Bureau, work, 1907 230-232
medical and veterinary, index-catalogue, work, 1908 232

O

UNIV. OF MICH.
APR 2 1910